Mitutoyo

Catalogue No. MAP 22



To be made is to be measured

MEASURING INSTRUMENTS CATALOGUE

Mitutoyo Asia Pacific

Notes on Use

Export Control

Export permission by the Japanese government may be required for exporting our products according to the Foreign Exchange and Foreign Trade Law.
Please consult our sales office near you before you export our products or you offer technical information to a nonresident.

Safety Caution

Carefully read the specifications and functions in this catalog before selecting products.
Safety may be compromised if you use products for purposes other than those stated here.
Feel free to contact your nearest Mitutoyo sales center if you wish to use a product for other purposes or in a special environment.

Sale of inch-model products

Sale of inch-model products in Japan is regulated by the Japanese laws and ordinances.
If you request to purchase inch-model products, contact your nearest Mitutoyo sales office.

Appearance and Specifications

Mitutoyo reserves the right to change any or all aspects of any product specification, including prices, designs and service content, without notice.
The product names in this catalog are registered trademarks or trademarks of Mitutoyo or their respective companies.

Mitutoyo Precision Measuring Instruments – Trusted Throughout the World

Table of Contents

A Measurement Data Management A-1 to A-32

B Micrometers B-1 to B-130
Micrometer Heads
Digimatic Micrometers

C Holtest C-1 to C-58
Inside Micrometers
Bore Gages

D Calipers D-1 to D-80
Height Gages
Linear Height
Depth Gages

E Gauge Blocks E-1 to E-48
Height Master
Reference Gages
Granite Surface Plates

F Digimatic Indicators F-1 to F-96
Dial Indicators
Dial Test Indicators
Stands

G Linear Gages G-1 to G-36
Litematic
Mu-Checker
Laser Scan Micrometers

H Digimatic Scale Units H-1 to H-22
Linear Scales

J Profile Projectors J-1 to J-18
Microscopes

K Vision Measuring Systems K-1 to K-16

L Surftest L-1 to L-28
Contracer
Formtracer
Roundtest

M Hardness Testing Machines M-1 to M-12

N Coordinate Measuring Machines N-1 to N-22

U Mitutoyo's Networks U-1 to U-12

Table of Contents

Examples of data management system design using various Mitutoyo measuring instruments

A Measurement Data Management

A-1 to A-32



The origin of Mitutoyo's trustworthy brand of small tool instruments

B Micrometers
Micrometer Heads
Digimatic Micrometers

B-1 to B-130



For easy and accurate measurement of inside diameters

C Holtest
Inside Micrometers
Bore Gages

C-1 to C-58



The standard measuring tool in industry

D Calipers
Height Gages
Linear Height
Depth Gages

D-1 to D-80

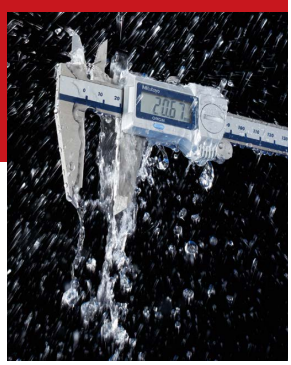

Length standards brought to you by Mitutoyo

E Gauge Blocks
Height Master
Reference Gages
Granite Surface Plates

E-1 to E-48



Comparison measuring instruments which ensure high quality, high accuracy and reliability.

F Digimatic Indicators
Dial Indicators
Dial Test Indicators
Stands

F-1 to F-96



To realize simultaneous multi-point measurement and automated measurement

G Linear Gages
Litematic
Mu-Checker
Laser Scan Micrometers

G-1 to G-36



To precisely determine the position of slides on machine tools and measuring devices

H Digimatic Scale Units
Linear Scales

H-1 to H-22



To inspect and precisely measure angles and lengths on small workpieces

J Profile Projectors
Microscopes

J-1 to J-18



Vision measuring systems for multipurpose use

K Vision Measuring Systems

K-1 to K-16

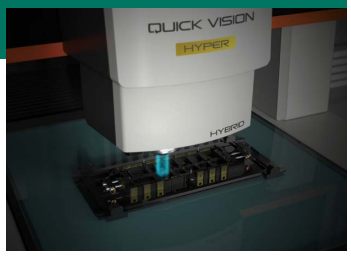

To measure surface roughness, waviness, profile, roundness and straightness

L Surftest
Contracer
Formtracer
Roundtest

L-1 to L-28

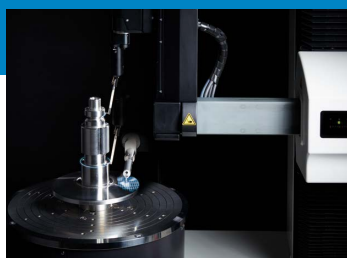

To enhance reliability and quality of products

M Hardness Testing Machines

M-1 to M-12



The fruits of leading-edge precision measuring technology capturing three dimensions

N Coordinate Measuring Machines

N-1 to N-22

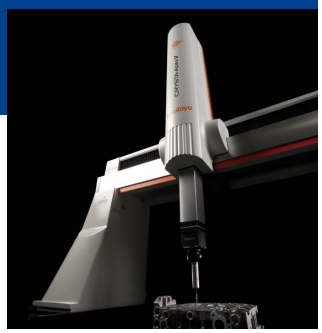

For better communication with our customers

U Mitutoyo's Domestic Network
Mitutoyo's Overseas Network
M³ Solution Centers

U-1 to U-12



Mitutoyo

Calibration Laboratories Worldwide

Mitutoyo has built a network for comprehensive calibration support of precision measuring products in the global market. To provide calibration services on a global scale, Mitutoyo has gained ISO/IEC 17025 certification from the accreditation body in each country, and has issued calibration certificates carrying the mark of each accreditation body. In addition, the calibration certificates issued by each calibration laboratory are mutually recognized in the countries and commercial areas signed in the MRA (Mutual Recognition Arrangement) of ILAC and APAC, or the MLA (Multilateral Agreement) of EA.

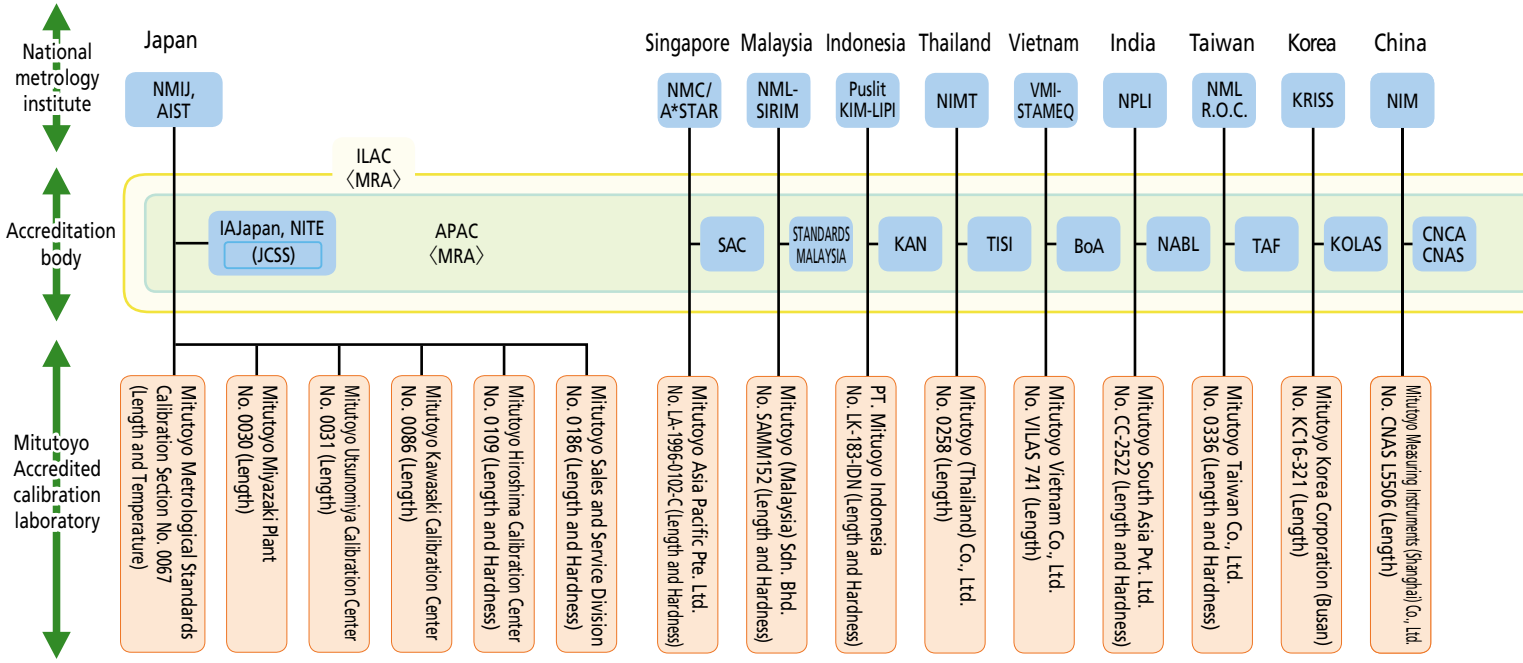

- Japan
  - AIST : National Institute of Advanced Industrial Science and Technology
  - NMIJ : National Metrology Institute of Japan
  - IAJapan : International Accreditation Japan
  - NITE : National Institute of Technology and Evaluation
  - JCSS : Japan Calibration Service System
- Singapore
  - NMC/A*STAR : National Metrology Centre/Agency for Science, Technology and Research
  - SAC : Singapore Accreditation Council
- Malaysia
  - NML-SIRIM : National Metrology Laboratory-Standards and Industrial Research Institute of Malaysia
  - STANDARDS MALAYSIA : STANDARDS MALAYSIA
- Indonesia
  - Puslit KIM-LIPI : Research Center for Calibration, Instrumentation and Metrology-Indonesian Institute of Science
  - KAN : Komite Akreditasi Nasional
- Thailand
  - NIMT : National Institute of Metrology (Thailand)
  - TISI : Thai Industrial Standard Institute
- Vietnam
  - VMI-STAMEQ : Vietnam Metrology Institute, Directorate for Standards and Quality
  - BoA : BUREAU OF ACCREDITATION
- India
  - NPLI : National Physical Laboratory of India
  - NABL : National Accreditation Board for Testing and Calibration Laboratories
- Taiwan
  - NML R.O.C. : National Measurement Laboratory R.O.C.
  - TAF : Taiwan Accreditation Foundation
- Korea
  - KRISS : Korea Research Institute of Standards and Science
  - KOLAS : Korea Laboratory Accreditation Scheme
- China
  - NIM : National Institute of Metrology
  - CNCA : Certification and Accreditation Administration of the people's republic of China
  - CNAS : China National Accreditation Service for Conformity Assesment
- U.S.A.
  - NIST : National Institute of Standards and Technology
  - A2LA : American Association for Laboratory Accreditation
- Canada
  - NRC/INMS : National Research Council Canada/Institute for National Measurement Standards
  - CLAS/SCC : Calibration Laboratory Assessment Service/Standards Council of Canada
- Mexico
  - CENAM : Centro Nacional de Metrología
  - ema : Entidad Mexicana de Acreditación, a.c.
- Germany
  - PTB : Physikalisch-Technische Bundesanstalt
  - DAkkS : Deutsche Akkreditierungsstelle GmbH
- U.K.
  - NPL : National Physical Laboratory
  - UKAS : United Kingdom Accreditation Service

Note: The above are domestic and international locations where Mitutoyo provides ISO/IEC 17025 accredited calibration services.
(As of July, 2022)

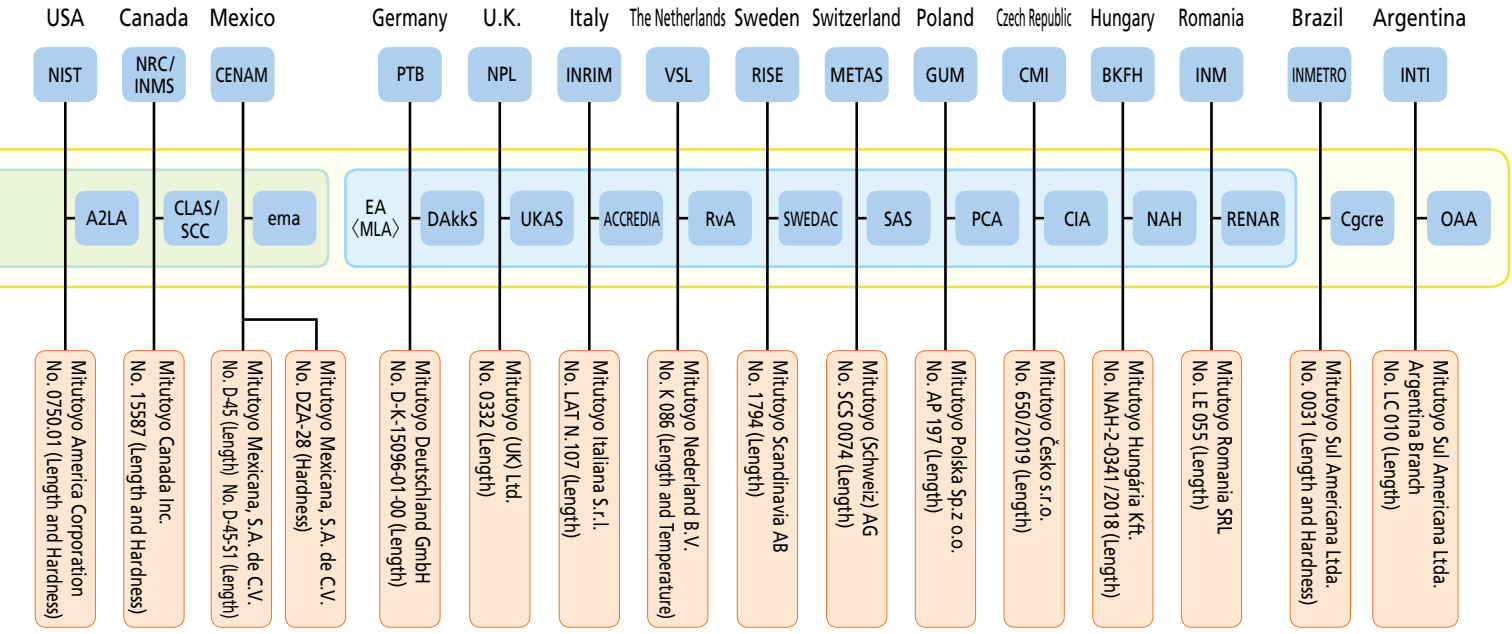

- Italy
  INRIM : Istituto Nazionale di Ricerca Metrologica
  ACCREDIA : L'ENTE ITALIANO DI ACCREDITAMENTO
- The Netherlands
  VSL : Van Swinden Laboratorium
  RvA : Raad voor Accreditatie
- Sweden
  RISE : RISE Research Institutes of Sweden AB
  SWEDAC : Swedish Board for Accreditation and Conformity Assessment
- Switzerland
  METAS : The Federal Institute of Metrology
  SAS : Swiss Accreditation Service
- Poland
  GUM : Główny Urząd Miar - the National Metrology Institute in Poland
  PCA : Polskie Centrum Akredytacji
- Czech Republic
  CMI : Český Metrologický Institut
  CIA : Český Institut pro Akreditaci
- Hungary
  BKFH : Government Office of the Capital City Budapest
  NAH : Nemzeti Akkreditáló Hatóság
- Romania
  INM : Institutul National de Metrologie
  RENAR : Asociaţia de Acreditare din România

ILAC : International Laboratory Accreditation Cooperation
APAC : Asia Pacific Accreditation Cooperation
MRA : Mutual Recognition Arrangement
EA : European co-operation for Accreditation
MLA : Multilateral Agreement

- Brazil
  INMETRO : Instituto Nacional de Metrologia Qualidade e Tecnologia
  Cgcre : Coordenação Geral de Acreditação do INMETRO
- Algentina
  INTI : Instituto Nacional de Tecnologia Industrial
  OAA : Organismo Argentino de Acreditación



Certificate of DAkkS accredited laboratory (Mitutoyo Deutschland in Germany)



Certificate of CNAS accredited laboratory (Mitutoyo Measuring Instruments (Shanghai) in China)



Certificate of A2LA accredited laboratory (Mitutoyo America in U.S.A.)



Certificate of RvA accredited laboratory (Mitutoyo Nederland in the Netherlands)



Certificate of NABL accredited laboratory (Mitutoyo South Asia in India)



Certificate of Cgcre accredited laboratory (Mitutoyo Sul Americana in Brazil)

Name of each National metrology institutes and Accreditation bodies are based on our survey.
For the latest information, please refer to our website. **https://www.mitutoyo.co.jp**

Mitutoyo

Traceability of Mitutoyo Standards

Mitutoyo ensures and maintains traceability of various types of precision measuring instruments by holding standards of length and other physical quantities that are directly traceable to the national standards for use in calibrating the working standards used for the calibration of measuring instrument products supplied to industry. Furthermore, Mitutoyo offers a temperature calibration service which is indispensable for high-accuracy length measurement. In addition, Mitutoyo ensures and maintains traceability of its test equipment such as hardness testing machines and vibrometers.

The Mitutoyo traceability system with the optical frequency comb at the top level, ensuring performance equivalent to that of the Japan's national standard, and the calibration technology supporting this system are the basis of highly accurate and reliable products offered to customers.


Certificate of Accreditation

Certificate of JCSS accredited laboratory (Mitutoyo Metrological Standards Calibration Section)

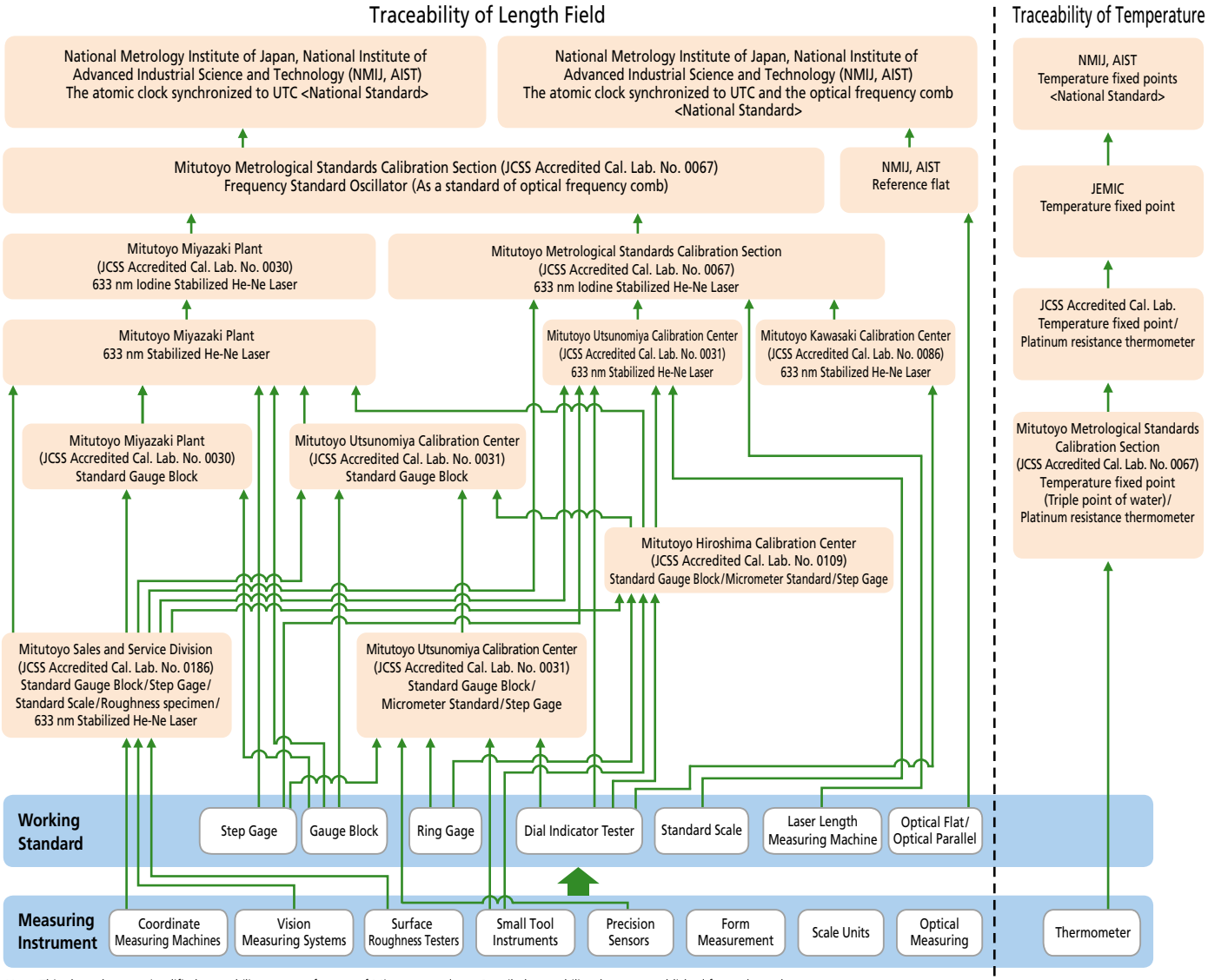

Note: This chart shows a simplified traceability system of a part of Mitutoyo products. Detailed traceability charts are published for each product.
(As of July, 2022)

For the latest information, please refer to our website. **https://www.mitutoyo.co.jp**

Traceability of Test Equipment

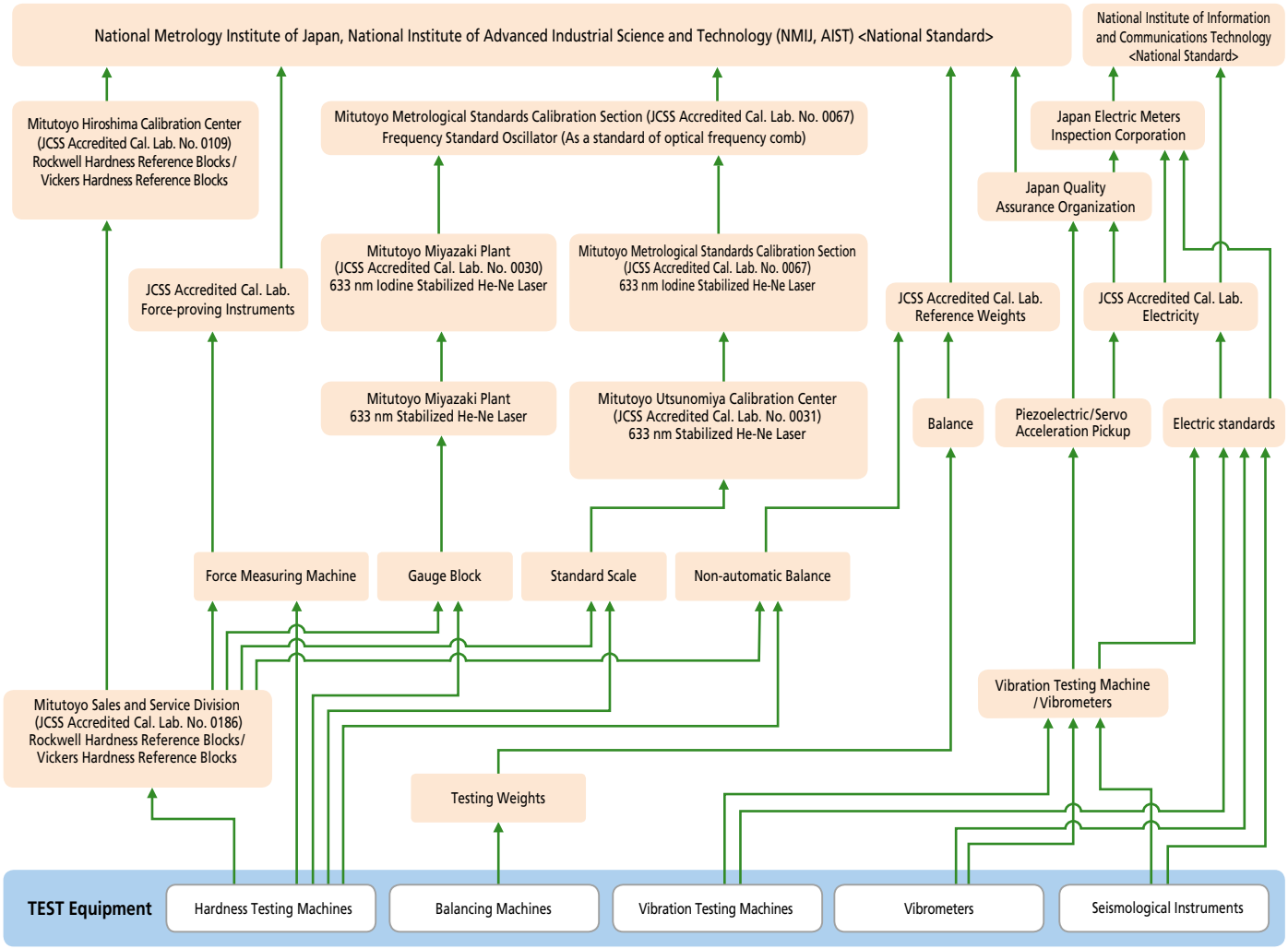

Note: This chart shows a simplified traceability system of a part of Mitutoyo products. Detailed traceability charts are published for each product.
(As of July, 2022)

For the latest information, please refer to our website. **https://www.mitutoyo.co.jp**

Response to Safety and Environmental Protection Regulations

To deliver safe and reliable products to our customers, Mitutoyo evaluates its products to ensure that they adhere to applicable product safety and environmental standards, including CE marking.

CE Marking

CE marking indicates that a product complies with the essential requirements of the relevant European health, safety and environmental protection legislation.



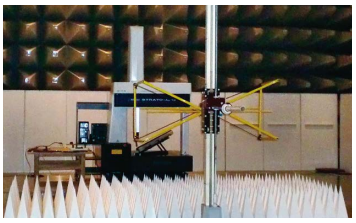

Conformity evaluation for CE marking (EMC Directives)

Major applicable Directives relating to Mitutoyo products

Applicable Directives	Applicable range
Machinery Directive	At least one part of a machine that may cause injury to the human body if it moves due to movement of an actuator such as a motor.
EMC Directive (Electromagnetic Compatibility Directive)	A product that may produce electromagnetic radiation or which is influenced by electromagnetic radiation from outside.
Low Voltage Directive	Equipment (device) that uses AC voltage of 50 to 1000 V or DC voltage of 75 to 1500 V.
Radio Equipment Directive	All electrical and electronic equipment that intentionally transmits and receives radio waves at frequencies below 3000 GHz.
RoHS Directive	Restriction of the use of certain hazardous substances in electrical and electronic equipment. Restricted substances and maximum concentration values tolerated by weight: · Lead (0.1%) · Cadmium (0.01%) · Mercury (0.1%) · Hexavalent chromium (0.1%) · Polybrominated biphenyls (PBB) (0.1%) · Polybrominated diphenyl ethers (PBDE) (0.1%) · Bis (2-ethylhexyl) phthalate (DEHP) (0.1%) · Butyl benzyl phthalate (BBP) (0.1%) · Dibutyl phthalate (DBP) (0.1%) · Diisobutyl phthalate (DIBP) (0.1%) Note: Our products fall under Cat.9 "Monitoring and control instruments including industrial monitoring and control instruments".

UKCA Marking

UKCA marking indicates that the products conform to the applicable requirements for products sold in Great Britain.

Response to WEEE Directive

The WEEE Directive*1 is a directive that mandates appropriate collection and recycling of electrical and electronic equipment waste. The purpose of this directive is to increase the reuse and recycling of these products. To differentiate between equipment waste and household waste, a crossed-out wheeled-bin symbol is marked on a product.

*1 WEEE Directive: Directive 2012/19/EU of the European Parliament and of the Council on waste electrical and electronic equipment.

Response to REACH Regulation

REACH Regulation*2 is a regulation governing registration, evaluation, authorization and restriction of chemical substances in Europe, and all products such as substances, mixtures and molded products (including accessories and packaging materials) are regulated.
Chemical substances scientifically proven to be substances that are hazardous to human health and the global environment (Candidate List of substances of very high concern for Authorisation (CLS)) are prohibited to be sold or information concerning them disclosed is mandated in Europe.
We will actively disclose information about our products and provide replacement if we find our products contain any of the listed substances.

*2 REACH Regulation: Regulation (EC) No1907/2006 of the European Parliament and of the Council concerning the Registration, Evaluation, Authorization and Restriction of Chemicals

Response to Management Methods for Restricted Use of Hazardous Substances in Electrical and Electronic Product (China RoHS 2)

We set the environmental protection use period regulated by China RoHS 2 per product and label with the marks shown on the right, together with a list of the contained substances.



"Environmental Protection Use Period" mark*3

*3 The environmental protection use period does not indicate the product warranty period.

Precautions to be taken when handling button cells

Warning Failure to comply with the following could result in "death or serious injury".

- Do not place the cell within an infant's reach. If swallowed, contact a doctor immediately.
- Do not dismantle, heat or throw the cell in a fire.
- If alkaline solution leaks from the cell and contacts your skin or clothes, immediately wash the affected area with water. IF IN EYES, immediately rinse eyes cautiously with water for several minutes. Remove contact lenses, if present and easy to do. Continue rinsing and summon immediate assistance from a doctor.

Caution Failure to comply with the following could result in "injury".

- Do not try to charge the cell as it is not chargeable. Install the cell with correct polarity. Failure to do so can cause cell leakage or burst resulting in damage to the instrument or personal injury.
- Do not solder directly to a cell.
- Do not use new and used cells together. Do not use different types of cells together.
- Do not use nor leave cells in direct sunlight nor in locations subject to high temperature or humidity.
- Avoid letting cells contact water.
- Ensure cells are inserted without coming into contact with metal parts of equipment.
- Read the equipment instruction manual and precautions carefully before using.
- Remove cells from equipment that will not be used for a prolonged period.
- In case of disposal, insulate (+) and (-) terminals of a cell by applying an insulating material.
- Follow the regulations of each country when disposing of batteries.

Meaning of Symbols

ABSOLUTE™

ABSOLUTE is a trademark of Mitutoyo Corporation.

ABSOLUTE Linear Encoder

This is an electronic measuring scale that provides a direct readout of absolute linear position when switched on, without needing to be zeroed or reset. Mitutoyo measuring instruments incorporating these scales provide the significant benefit of being always ready for measurement without the need of preliminary setting after switching on. There are three types of absolute linear encoders depending on whether the method used is electrostatic, electromagnetic, or optical. They are widely used in various measuring instruments as measuring systems endowed with enhanced reliability of measured values.

Advantages:

1. No count error occurs even if you move the slider or spindle extremely rapidly.
2. You do not have to reset the system to zero when turning on the system after turning it off*1.
3. As this type of encoder can drive with less power than the incremental encoder, the battery life is prolonged to about 5 years (continuous operation of 18,000 hours)*2 under normal use.

*1 Unless the battery is removed.
*2 In the case of ABSOLUTE Digimatic calipers and ABSOLUTE coolant proof calipers.

IP65

IP66

IP67

IP67 G

IP is a trademark of Mitutoyo Corporation.

IP Codes

These are codes that indicate the degree of protection provided (by an enclosure) for the electrical function of a product against the ingress of foreign bodies, dust and water as defined in IEC standards (IEC 60529: 2001) and JIS C 0920: 2003. [IEC: International Electrotechnical Commission]

First characteristic numeral	Degrees of protection against solid foreign objects	
	Brief description	Definition
0	Unprotected	—
1	Protected against solid foreign objects of Sø50 mm and greater	A Sø50 mm object probe shall not fully penetrate enclosure*
2	Protected against solid foreign objects of Sø12.5 mm and greater	A Sø12.5 mm object probe shall not fully penetrate enclosure*
3	Protected against solid foreign objects of Sø2.5 mm and greater	A Sø2.5 mm object probe shall not fully penetrate enclosure*
4	Protected against solid foreign objects of Sø1.0 mm and greater	A Sø1.0 mm object probe shall not fully penetrate enclosure*
5	Protected against dust	Ingress of dust is not totally prevented, but dust that does penetrate must not interfere with satisfactory operation of the apparatus or impair safety.
6	Dust-proof	No ingress of dust allowed.

* For details of the test conditions used in evaluating each degree of protection, please refer to the original standard.

Second characteristic numeral	Degrees of protection against water	
	Brief description	Definition
0	Unprotected	—
1	Protected against vertical water drops	Vertically falling water drops shall have no harmful effects.
2	Protected against vertical water drops within a tilt angle of 15°	Vertically falling water drops shall have no harmful effects when the enclosure is tilted at any angle up to 15° on either side of the vertical.
3	Protected against spraying water	Water sprayed at an angle up to 60° either side of the vertical shall have no harmful effects.
4	Protected against splashing water	Water splashed against the enclosure from any direction shall have no harmful effects.
5	Protected against water jets	Water projected in jets against the enclosure from any direction shall have no harmful effects.
6	Protected against powerful water jets	Water projected in powerful jets against the enclosure from any direction shall have no harmful effects.
7	Protection against water penetration	Ingress of water in quantities causing harmful effects shall not be possible when the enclosure is temporarily immersed in water under standardized conditions of pressure and time.
8	Protected against the effects of continuous immersion in water	Ingress of water in quantities causing harmful effects shall not be possible when the enclosure is continuously immersed in water under conditions which shall be agreed between manufacturer and user but which are more severe than for IPX7.

Third characteristic numeral	Degrees of protection against oil	
	Abstract	
F	Oil-resistant	Drops or splashes of oil from any direction cause no harmful effects.
G	Oil-proof	Protection against entry of oil droplets or splashes from all directions.

The protection levels against oil are specified only in the appendix of JIS C 0920.

TÜVRheinland CERTIFIED — Dust- and Water-Protected — www.tuv.com ID 0000006683

TÜV Rheinland certification marks

All products with the marks shown on the left have passed the IP test carried out by the German accreditation organization, TÜV Rheinland.

PROPRIETARY INSPECTION CERTIFICATE — Mitutoyo guarantees the product quality — Mitutoyo guarantees the product quality

Measuring Instruments Shipped with Inspection Certificate

Mitutoyo guarantees product quality as a leading precision measuring instrument manufacturer and ships measuring instruments with an inspection certificate that includes inspection data so that customers can use them with confidence. Mitutoyo also calibrates the purchased measuring instrument and issues, for a fee, a calibration certificate that proves traceability to the relevant standard.

Note: For the meaning of the inspection marks shown at left, refer to the detailed description of each product.

MeasurLink® ENABLED
Data Management Software by Mitutoyo

MeasurLink® ENABLED marks

Products equipped with the measurement data output function can be connected to the measurement data network system MeasurLink®.
MeasurLink® is a registered trademark of Mitutoyo Corporation in Japan and Mitutoyo America Corporation in the United States.

Main Unit Startup System

Installation of Main Unit Startup System

As a part of the enhancement of our export control system, the large CNC measuring machines (all the CNC Coordinate Measuring Machines, Vision Measuring Systems, and Form Measuring Machines) are now equipped with a Main Unit Startup System (relocation detecting system) before export.
This system is designed to take a machine out of operation upon detecting the mechanical shock that accompanies relocation. If you intend to relocate a measuring machine fitted with this system, please contact us beforehand so that our service engineers can assist you.
On the other hand, the system may be triggered in the event of a natural event such as a powerful earthquake. In this case, our service engineers will deal with the situation at the earliest opportunity.

Mitutoyo

Features of Mitutoyo Small Tool Instruments

High Accuracy Digimatic Micrometer SERIES 293 with resolution of 0.0001 mm



Resolution: 0.0001 mm

The High-Accuracy Digimatic Micrometer utilizes Mitutoyo's innovative 0.1 µm resolution ABS (absolute) rotary sensor and high-accuracy screw machining technology to reduce the instrumental error to ±0.5 µm, delivering higher accuracy (0.1 µm) without sacrificing operability.



COOLANT PROOF

COOLANT PROOF™

COOLANT PROOF is the universal term for Mitutoyo Digimatic Small Tool Instruments that are not only resistant to dust and water ingress (rated to IP65 or better) but also to deterioration of materials due to contact with the cutting oil or coolant fluids in normal use.

Note: Some types of aggressive cutting oil or coolant may degrade the sealing materials over time.



QuantuMike with 2 mm/rev Spindle Feed



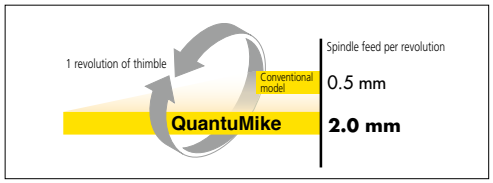

Faster measurement is achieved by using a finer thread which feeds the spindle by 2 mm per revolution of the thimble instead of the standard 0.5 mm. This increase of spindle feed has been made possible thanks to new high precision thread-cutting and test techniques. In addition, the ratchet thimble mechanism helps ensure repeatable results and it enables easy operation- even when making measurement one-handed.





INDEX FOR APPLICATIONS

STANDARDS

	Page
Gauge Blocks	E-3 to E-30
Micrometer Stands	B-76
Optical Flats	B-73
Optical Parallels	B-73
Height Master	E-35, E-36
Universal Height Master	E-37
Check Master	E-38
Square Master	E-42
High Precision Square	E-41
Bore Gage Checker	C-51
Setting Rings	C-52
CERA Caliper Checker	D-56
CERA Inside Micro Checker	C-28
Depth Micro Checker	D-68
Standard Scales	E-39
Working Standard Scales	E-40

MEASUREMENT OF INSIDE DIMENSIONS

	Page
■ ONE-DIMENSIONAL	
Telescoping Gage Set	B-69
Vernier Caliper	D-8 to D-11, D-22 to D-25, D-27, D-29, D-31, D-32, D-35, D-37 to D-39
Dial Caliper	D-14
ABSOLUTE Digimatic Caliper	D-3 to D-7, D-12 to D-13, D-15 to D-21, D-26, D-28, D-30 to D-33, D-37 to D-38, D-40 to D-41
Inside Micrometers	C-17 to C-27
CERA Inside Micro Checker	C-28
Bore Gages	C-29 to C-31, C-33 to C-46
ABSOLUTE Digimatic Bore Gages	C-47
ABSOLUTE Boremetic	C-13
Holtest	C-7 to C-12
Digimatic Holtest	C-3
Groove Micrometers	B-67
■ TWO-DIMENSIONAL	
Profile Projectors	J-3 to J-4
Toolmakers' Microscope	J-10
Measuring Microscopes	J-6 to J-9
QM-Data200	J-12
Vision Unit	J-11
QUICK IMAGE Series	K-14
■ THREE-DIMENSIONAL	
Coordinate Measuring Machines	N-3 to N-12
QUICK SCOPE Series	K-13
QUICK VISION Series	K-3 to K-8
Micro Form Measuring System	K-9

MEASUREMENT OF OUTSIDE DIMENSIONS

	Page
■ ONE-DIMENSIONAL	
Caliper	D-3 to D-41
Dial Thickness Gages	F-79 to F-81
Digimatic Thickness Gages	F-79 to F-81
Dial Snap Gage	F-83
Micrometers	B-3 to B-68
Digit Outside Micrometers	B-18
Digimatic Micrometers	B-3 to B-12, B-20, B-22, B-29, B-32, B-35, B-38, B-40 to B-41, B-43, B-46 to B-49, B-51, B-53, B-55 to B-56, B-59, B-61, B-68
Quickmike	B-11
Litematic	G-20
Steel Rules	E-43
Working Standard Scales	E-40
■ TWO-DIMENSIONAL	
Profile Projectors	J-3 to J-4
Toolmakers' Microscopes	J-10
Measuring Microscopes	J-6 to J-9
QM-Data200	J-12
Vision Unit	J-11
QUICK IMAGE Series	K-14
■ THREE-DIMENSIONAL	
Coordinate Measuring Machines	N-3 to N-12
QUICK SCOPE Series	K-13
QUICK VISION Series	K-3 to K-8
Micro Form Measuring System	K-9

ANGLE MEASUREMENT

	Page
■ ONE-DIMENSIONAL	
Digimatic Universal Protractor	E-46
Universal Bevel Protractor	E-46
Bevel Protractor	E-46
■ TWO-DIMENSIONAL	
Profile Projectors	J-3 to J-4
Toolmakers' Microscopes	J-10
Measuring Microscopes	J-6 to J-9
QM-Data200	J-12
Vision Unit	J-11
QUICK IMAGE Series	K-14
■ THREE-DIMENSIONAL	
Coordinate Measuring Machines	N-3 to N-12
QUICK SCOPE Series	K-13
QUICK VISION Series	K-3 to K-8
Micro Form Measuring System	K-9

DEPTH MEASUREMENT

	Page
■ ONE-DIMENSIONAL	
Vernier Caliper	D-8 to D-11, D-22 to D-25, D-27, D-29, D-31, D-32, D-35, D-37 to D-39
Dial Caliper	D-14
ABSOLUTE Digimatic Caliper	D-3 to D-7, D-12 to D-13, D-15 to D-21, D-26, D-28, D-30 to D-33, D-37 to D-38, D-40 to D-41
Depth Micrometer	D-66
Vernier Depth Gage	D-71
Dial Depth Gage	D-77
ABSOLUTE Digimatic Depth Gage	D-69 to D-70
Depth Gage Attachment	D-76
Extension Bases	D-76
■ TWO-DIMENSIONAL	
Linear Height	D-59
Measuring Microscope	J-6 to J-9
Vision Unit	J-11
■ THREE-DIMENSIONAL	
Coordinate Measuring Machines	N-3 to N-12
QUICK VISION Series	K-3 to K-8
Micro Form Measuring System	K-9

HEIGHT MEASUREMENT

	Page
■ ONE-DIMENSIONAL	
Vernier Height Gage	D-53
Dial Height Gage	D-55
Digimatic Height Gage	D-49 to D-52
Height Master	E-35
Universal Height Master	E-37
QM-Height	D-61
Black Granite Surface Plates	E-47
■ TWO-DIMENSIONAL	
Linear Height	D-59
Measuring Microscopes	J-6 to J-9
Vision Unit	J-11
■ THREE-DIMENSIONAL	
Coordinate Measuring Machines	N-3 to N-12
QUICK SCOPE Series	K-13
QUICK VISION Series	K-3 to K-8
Micro Form Measuring System	K-9

MEASUREMENT OF COMPLEX 3D PARTS

	Page
■ THREE-DIMENSIONAL	
Coordinate Measuring Machines	N-3 to N-12
QUICK SCOPE Series	K-13
QUICK VISION Series	K-3 to K-8
Micro Form Measuring System	K-9

COMPARISON MEASUREMENT

	Page
■ ONE-DIMENSIONAL	
Gauge Blocks	E-3 to E-30
Gauge Block Comparator	E-31, E-32
ABSOLUTE Digimatic Caliper	D-3 to D-7, D-12 to D-13, D-15 to D-21, D-26, D-28, D-30 to D-33, D-37 to D-38, D-40 to D-41
Telescoping Gage Set	B-69
Bore Gages	C-29 to C-31, C-33 to C-47
Dial Indicators	F-26 to F-65
Digimatic Indicators	F-3 to F-25
Dial Test Indicators	F-67 to F-76
Dial Snap Meters	B-65
Digimatic Micrometers	B-3 to B-12, B-20, B-22, B-29, B-32, B-35, B-38, B-40 to B-41, B-43, B-46 to B-49, B-51, B-53, B-55 to B-56, B-59, B-61, B-68
Indicating Micrometers	B-63
ABSOLUTE Borematic	C-13
Digimatic Holtest	C-3
Dial Snap Gage	F-83
Digimatic Height Gage	D-49 to D-52
Height Master	E-35, E-36
QM-Height	D-61
Litematic	G-20
Mu-Checker	G-21 to G-25
Laser Scan Micrometers	G-27 to G-31
Linear Gages	G-5 to G-10
Dial Gage Stands	F-86
Comparator Stands	F-88
Calibration Tester	F-78
■ TWO-DIMENSIONAL	
Linear Height	D-59
Profile Projectors	J-3 to J-4
Toolmakers' Microscopes	J-10
Measuring Microscopes	J-6 to J-9
QM-Data200	J-12
Vision Unit	J-11
QUICK IMAGE Series	K-14
■ THREE-DIMENSIONAL	
Coordinate Measuring Machines	N-3 to N-12
QUICK SCOPE Series	K-13
QUICK VISION Series	K-3 to K-8
Micro Form Measuring System	K-9

Mitutoyo

STEP MEASUREMENT

	Page
■ ONE-DIMENSIONAL	
Vernier Caliper	D-8 to D-11, D-22 to D-25, D-27, D-29, D-31, D-32, D-35, D-37 to D-39
Dial Caliper	D-14
ABSOLUTE Digimatic Caliper	D-3 to D-7, D-12 to D-13, D-15 to D-21, D-26, D-28, D-30 to D-33, D-37 to D-38, D-40 to D-41
Vernier Height Gage	D-53
Dial Height Gage	D-55
Digimatic Height Gage	D-49 to D-52
Dial Indicators	F-26 to F-65
Digimatic Indicators	F-3 to F-25
Dial Test Indicators	F-67 to F-76
Linear Gages	G-5 to G-10
Mu-Checker	G-21 to G-25
QM-Height	D-61
Uni-Mike	B-61
■ TWO-DIMENSIONAL	
Linear Height	D-59
■ THREE-DIMENSIONAL	
Coordinate Measuring Machines	N-3 to N-12
QUICK SCOPE Series	K-13
QUICK VISION Series	K-3 to K-8
Micro Form Measuring System	K-9

MEASUREMENT OF ELASTIC PARTS

	Page
■ ONE-DIMENSIONAL	
ABSOLUTE Low Force Caliper	D-40
Litematic	G-20
■ TWO-DIMENSIONAL	
Profile Projectors	J-3 to J-4
Toolmakers' Microscopes	J-10
Measuring Microscopes	J-6 to J-9
QUICK IMAGE Series	K-14
■ THREE-DIMENSIONAL	
Coordinate Measuring Machines	N-3 to N-12
QUICK SCOPE Series	K-13
QUICK VISION Series	K-3 to K-8
Micro Form Measuring System	K-9

MEASUREMENT OF SHEET METALS

	Page
Sheet Metal Micrometers	B-43
Laser Scan Micrometers	G-27 to G-31

NON-CONTACT MEASUREMENT

	Page
■ ONE-DIMENSIONAL	
Laser Scan Micrometers	G-27 to G-31
■ TWO-DIMENSIONAL	
Profile Projectors	J-3 to J-4
Toolmakers' Microscopes	J-10
Measuring Microscopes	J-6 to J-9
■ THREE-DIMENSIONAL	
QUICK SCOPE Series	K-13
QUICK VISION Series	K-3 to K-8
Micro Form Measuring System	K-9

MULTI-POINT MEASUREMENT

	Page
Dial Indicators	F-26 to F-65
Digimatic Indicators	F-3 to F-25
Linear Gages	G-5 to G-10
Linear Gage Counter	G-11 to G-13
Mu-Checker	G-21 to G-25

MEASURING INSTRUMENTS TO BE USED AS SENSOR

	Page
Dial Indicators	F-26 to F-65
Digimaic Indicators	F-3 to F-25
Dial Test Indicators	F-67 to F-76
Linear Gages	G-5 to G-10
Mu-Checker	G-21 to G-25
Laser Scan Micrometers	G-27 to G-31
Linear Scale	H-7 to H-20
ABSOLUTE Digimatic Scale Units	H-3 to H-6

MEASUREMENT OF FORM (SURFACE ROUGHNESS, ROUNDNESS), SQUARENESS, AND PARALLELISM

	Page
Surftest	L-3 to L-7
Formtracer	L-9 to L-16
Contracer	L-8
Roundtest	L-21 to L-26
Coordinate Measuring Machines	N-3 to N-12
High Precision Squares	E-41
Square Master	E-42
Dial Test Indicators	F-67 to F-76
Mu-Checker	G-21 to G-25
Black Granite Surface Plates	E-47
Optical Flats	B-73
Optical Parallels	B-73

MEASUREMENT OF CENTER-TO-CENTER DISTANCES

	Page
■ ONE-DIMENSIONAL	
Offset Caliper (ABSOLUTE Digimatic types)	D-26 to D-27
Offset Centerline Caliper (ABSOLUTE Digimatic types)	D-28 to D-29
Center Probe (for Height Gages)	D-58
QM-Height	D-61
Black Granite Surface Plates	E-47
■ TWO-DIMENSIONAL	
Linear Height	D-59
Profile Projectors	J-3 to J-4
Toolmakers' Microscopes	J-10
Measuring Microscopes	J-6 to J-9
QM-Data200	J-12
Vision Unit	J-11
QUICK IMAGE Series	K-14
■ THREE-DIMENSIONAL	
Coordinate Measuring Machines	N-3 to N-12
QUICK SCOPE Series	K-13
QUICK VISION Series	K-3 to K-8
Micro Form Measuring System	K-9

SCREW THREAD MEASUREMENT

	Page
■ ONE-DIMENSIONAL	
Screw Thread Micrometers	B-31
Micrometers	B-3 to B-68
Digit Outside Micrometers	B-18
Digimatic Micrometers	B-3 to B-12, B-20, B-22, B-29, B-32, B-35, B-38, B-40 to B-41, B-43, B-46 to B-49, B-51, B-53, B-55 to B-56, B-59, B-61, B-68
3-Wire Units	B-74
V-Anvil Micrometers	B-53
Point Micrometers	B-51
Thread Pitch Gages	E-45
■ TWO-DIMENSIONAL	
Profile Projectors	J-3 to J-4
Toolmakers' Microscopes	J-10
Measuring Microscopes	J-6 to J-9
QM-Data200	J-12
Vision Unit	J-11
QUICK IMAGE Series	K-14
Contracer	L-8
■ THREE-DIMENSIONAL	
Coordinate Measuring Machines	N-3 to N-12
QUICK SCOPE Series	K-13
QUICK VISION Series	K-3 to K-8
Micro Form Measuring System	K-9

MEASUREMENT OF GEARS

	Page
■ ONE-DIMENSIONAL	
Disk Micrometers	B-35 to B-37, B-40 to B-42
Gear Tooth Micrometers	B-38 to B-39
■ TWO-DIMENSIONAL	
Profile Projectors	J-3 to J-4
Toolmakers' Microscopes	J-10
Measuring Microscopes	J-6 to J-9
QM-Data200	J-12
Vision Unit	J-11
QUICK IMAGE Series	K-14
■ THREE-DIMENSIONAL	
Coordinate Measuring Machines	N-3 to N-12
QUICK SCOPE Series	K-13
QUICK VISION Series	K-3 to K-8
Micro Form Measuring System	K-9

HARDNESS MEASUREMENT

	Page
Hardness Testing Machines	M-3 to M-8
Portable Hardness Testing Instruments	M-9 to M-10

MEASUREMENT ASSOCIATED WITH SEMICONDUCTOR/LCD FABRICATION

	Page
■ ONE-DIMENSIONAL	
Vernier Caliper	D-8 to D-11, D-22 to D-25, D-27, D-29, D-31, D-32, D-35, D-37 to D-39
Dial Caliper	D-14
ABSOLUTE Digimatic Caliper	D-3 to D-7, D-12 to D-13, D-15 to D-21, D-26, D-28, D-30 to D-33, D-37 to D-38, D-40 to D-41
Dial Indicators	F-26 to F-65
Digimatic Indicators	F-3 to F-25
Dial Test Indicators	F-67 to F-76
Micrometers	B-3 to B-68
Digit Outside Micrometers	B-18
Digimatic Micrometers	B-3 to B-12, B-20, B-29, B-32, B-35, B-38, B-46 to B-49, B-51, B-53, B-55 to B-56, B-61, B-68
Linear Gages	G-5 to G-10
Litematic	G-20
Mu-Checker	G-21 to G-25
■ TWO-DIMENSIONAL	
FS70	J-13
FS objectives	J-15
Toolmakers' Microscopes	J-10
Measuring Microscopes	J-6 to J-9
VMU	J-14
WIDE VMU	J-14
Profile Projectors	J-3 to J-4
QM-Data200	J-12
Vision Unit	J-11
QUICK IMAGE Series	K-14
■ THREE-DIMENSIONAL	
QUICK SCOPE Series	K-13
QUICK VISION Series	K-3 to K-8
Micro Form Measuring System	K-9

Mitutoyo

DIGITAL READOUT AND POSITION FEEDBACK OF MACHINE TOOLS

	Page
Linear Scales	H-7 to H-20
ABSOLUTE Digimatic Scale Units (SD)	H-3 to H-6
Linear Gages	G-5 to G-10

STATISTICAL PROCESS CONTROL

	Page
Input Tool Series (IT-020U, IT-007R)	A-6
USB Input Tool Direct: USB-ITN	A-5
U-WAVE Series	A-7 to A-14
Digimatic Mini-Processor DP-1VA LOGGER	A-19
Multiplexer MUX-10F	A-20
MeasurLink®	A-25
MeasureReport	A-18

MEASUREMENT IN ROLL FORMING

	Page
■ ONE-DIMENSIONAL	
Vernier Caliper	D-8 to D-11, D-22 to D-25, D-27, D-29, D-31, D-32, D-35, D-37 to D-39
Dial Caliper	D-14
ABSOLUTE Digimatic Caliper	D-3 to D-7, D-12 to D-13, D-15 to D-21, D-26, D-28, D-30 to D-33, D-37 to D-38, D-40 to D-41
Vernier Height Gage	D-53
Dial Height Gage	D-55
Digimatic Height Gage	D-49 to D-52
Dial Indicators	F-26 to F-65
Digimatic Indicators	F-3 to F-25
Dial Test Indicators	F-67 to F-76
Micrometers	B-3 to B-68
Digit Outside Micrometers	B-18
Digimatic Micrometers	B-3 to B-12, B-20, B-29, B-32, B-35, B-38, B-46 to B-49, B-51, B-53, B-55 to B-56, B-61, B-68
Bore Gages	C-29 to C-31, C-33 to C-46
Linear Gages	G-5 to G-10
QM-Height	D-61
Laser Scan Micrometers	G-27 to G-31
Mu-Checker	G-21 to G-25
Black Granite Surface Plates	E-47
■ TWO-DIMENSIONAL	
Linear Height	D-59
■ THREE-DIMENSIONAL	
Coordinate Measuring Machines	N-3 to N-12
QUICK VISION Series	K-3 to K-8
Micro Form Measuring System	K-9
Roundtest	L-21 to L-26
Surftest	L-3 to L-7

NUMERICAL INDEX

SERIES No.	Description	Page
1 - 199		
1	Back Plunger Type Dial Indicators (SERIES 1)	F-56
1	Dial Indicators (SERIES 1)	F-44 to F-49
2	Back Plunger Type Dial Indicators (SERIES 2)	F-55
2	Dial Indicators (SERIES 2)	F-28 to F-43 F-53 to F-54
3	Dial Indicators (SERIES 3)	F-50 to F-52
4	Dial Indicators (SERIES 4)	F-50 to F-52
7	Dial Depth Gage	D-77
7	Dial Gage Stands	F-86
7	Magnetic Stands	F-84
7	Micro Jack	B-123
7	Thickness Gages	F-79 to F-81
102	Outside Micrometers	B-13
102	Ratchet Thimble Micrometers	B-14
103	Outside Micrometers	B-15
104	Outside Micrometers with Interchangeable Anvils	B-24
105	Outside Micrometers with Anvil Extension Collars	B-26
107	Indicator Type Micrometers	B-21
110	Micrometer Heads (Differential Screw Thread Translator Type)	B-117
111	Spline Micrometers	B-50
112	Crimp Height Micrometers	B-60
112	Point Micrometers	B-52
113	Limit Micrometers	B-62
114	V-Anvil Micrometers	B-54
115	Tube Micrometers	B-46 to B-48
117	Uni-Mike	B-61
118	Sheet Metal Micrometers	B-44
119	Sheet Metal Micrometer	B-45
122	Blade Micrometers	B-57
123	Disk Micrometers	B-36
124	Gear Tooth Micrometers	B-39
125	Screw Thread Micrometers	B-31
126	Screw Thread Micrometers	B-32
128	Depth Micrometer	D-68
129	Depth Micrometer	D-66
131	Digit Spline Micrometers	B-50
133	Tubular Inside Micrometers (Single-Rod Type)	C-17
137	Tubular Inside Micrometers (Extension-Rod Type)	C-19
139	Tubular Inside Micrometers (Extension-Pipe Type)	C-23
140	Tubular Inside Micrometers (Extension-Pipe Type)	C-23
141	Inside Micrometers (Interchangeable-Rod Type)	C-27
142	Digimatic Crimp Height Micrometers	B-60
142	Digit Point Micrometers	B-52
143	Caliper Type Micrometers	B-30
145	Inside Micrometers (Caliper Type)	C-26
146	Groove Micrometers	B-67
147	Can Seam Micrometers	B-58
147	Hub Micrometers	B-58
148	Micrometer Heads (Short Thimble with Choice of Diameter)	B-89
148	Micrometer Heads (Small/Ultra-small Type)	B-87
148	Micrometer Heads (Small Standard Type)	B-92 to B-94
148	Micrometer Heads (Small Thimble Diameter Standard Type)	B-95 to B-97
148	Micrometer Heads (Fine Spindle Feed of 0.1 mm/rev)	B-114
148	Micrometer Heads (Fine Spindle Feed of 0.25 mm/rev)	B-116
148	Micrometer Heads (Locking-screw Type)	B-108 to B-111
149	Micrometer Heads (Small Standard Type with Carbide-Tipped Spindle)	B-98 to B-99
150	Micrometers Heads (Medium-sized Standard Type)	B-100 to B-103
151	Micrometer Heads (8 mm Diameter Spindle)	B-104 to B-107
152	Micrometer Heads (Large Thimble Type)	B-119
152	Micrometer Heads (Quick Spindle Feed of 1 mm/rev)	B-113
152	Micrometer Heads (XY-Stage Type)	B-121
153	Micrometer Heads (High Accuracy and Resolution)	B-122
153	Micrometer Heads (Non-rotating Spindle Type)	B-112
155	Telescoping Gage Set	B-69
156	Micrometer Stands	B-76
157	Optical Parallels	B-73
158	Optical Flats	B-73
160	Vernier Caliper (Nib Style Jaws)	D-22
164	Digimatic Micrometer Heads	B-84 to B-86
167	Setting Standards for Outside Micrometers	B-70
167	Setting Standards for Screw Thread Micrometers	B-72
167	Setting Standards for V-Anvil Micrometers	B-72
169	Disk Micrometers (Non-Rotating Spindle Type)	B-42
169	Paper Thickness Micrometers	B-34
170	UDT-2 Dial Indicator Tester	F-78
170	i-Checker	F-77
172	PH-3515F	J-4
174	KA-200 Counter (for Linear Scale)	H-14
176	Hyper MF/MF-U High-accuracy Measuring Microscope	J-9
176	MF Measuring Microscope	J-6
176	MF-U Universal Measuring Microscope	J-7
176	TM Toolmakers' Microscopes	J-10
177	Setting Rings	C-52
178	FORMTRACER Avant S3000 Series	L-9
178	Surftest SJ-210	L-3
178	Surftest SJ-310	L-3
178	Surftest SJ-410	L-5
178	Surftest SJ-500	L-6
178	Surftest SJ-500P	L-6
178	Surftest SV-2100	L-6
178	Surftest SV-2100M4	L-6
178	Surftest Extreme SV-3000CNC	L-7
178	Surftest Extreme SV-M3000CNC	L-7
182	Standard Scales	E-39
182	Steel Rules	E-43
182	Working Standard Scales	E-40
183	Mini Scope	J-16
183	Pocket Comparators	J-16
183	Clear Loupe	J-16
184	Thickness Gages	E-44
186	Radius Gages	E-45
187	Bevel Protractor	E-46
187	Digimatic Universal Protractor	E-46
187	Universal Bevel Protractor	E-46
188	Thread Pitch Gages	E-45
192	Dial Height Gage	D-55
192	Digimatic Height Gage	D-49 to D-50
193	Digit Outside Micrometers	B-18
197	Micrometer Heads (Long Stroke Non-rotating Spindle)	B-122
200 - 299		
201	Dial Snap Gage	F-83
211	Roundtest RA-10	L-21
211	Roundtest RA-120/120P	L-21
211	Roundtest RA-1600	L-22
211	Roundtest RA-2200	L-22
211	Roundtest RA-2200 PLUS	L-23
211	Roundtest RA-H5200	L-23

Mitutoyo

SERIES No.	Description	Page
211	Roundtest RA-H5200 PLUS	L-24
211	Roundtest Extreme RA-6000 CNC	L-24
211	ROUNDTRACER EXTREME	L-25
215	Bore Gage Stand	C-32
215	Cast Iron Base Comparator Stands	F-90
215	Granite Base Comparator Stands	F-88
218	FORMTRACER Avant C3000/4000	L-10
218	Contracer CV-2100	L-8
223	Digit Disk Micrometers	B-36
227	ABSOLUTE Digimatic Micrometers	B-12
227	Digimatic Disk Micrometers (Non-Rotating Spindle Type)	B-41
250	Micrometer Heads (Digit Counter Type)	B-123
264	DP-1VA LOGGER Digimatic Mini-Processor	A-19
264	Input Tools	A-6
264	Multiplexer MUX-10F	A-20
264	QM-Data200	J-12
264	USB Input Tool Direct	A-5
293	Coolant Proof Micrometers	B-7
293	Digimatic Outside Micrometers	B-9 to B-10
293	High-Accuracy Digimatic Micrometer	B-3
293	QuantuMike	B-5
293	Quickmike (ABSOLUTE)	B-11
295	Digit Tube Micrometers	B-46
300 - 399		
302	PJ-PLUS Premium Benchtop Projector	J-3
303	PJ-H30 Premium Benchtop Projector	J-3
304	PV-5110	J-4
311	High Precision Square	E-41
311	Square Master	E-42
313	3-Wire Units	B-74
314	Digimatic V-Anvil Micrometers	B-53
317	Digimatic Uni-Mike	B-61
318	Litematic	G-20
323	Digimatic Disk Micrometers	B-35
324	Digimatic Gear Tooth Micrometers	B-38
326	Digimatic Screw Thread Micrometers	B-32
329	Digimatic Depth Micrometer	D-66
331	Digimatic Spline Micrometers	B-49
337	Digimatic Tubular Inside Micrometers (Extension-Rod Type)	C-19
339	Digimatic Tubular Inside Micrometers (Extension-Pipe Type)	C-22
340	Digimatic Outside Micrometers with Interchangeable Anvils	B-22
342	Digimatic Crimp Height Micrometers	B-59
342	Digimatic Crimp Height Micrometers (ABSOLUTE)	B-59
342	Digimatic Point Micrometers	B-51
343	Digimatic Caliper Type Micrometers	B-29
345	Digimatic Inside Micrometers (Caliper Type)	C-25
350	Digimatic Micrometer Heads	B-84 to B-86
359	Vision Unit	J-11
368	Holtest	C-7 to C-10
368	Holtest (Type II)	C-11
369	Digimatic Disk Micrometers (ABSOLUTE)	B-41
369	Digimatic Disk Micrometers (Non-Rotating Spindle Type)	B-40
378	FS objectives	J-15
378	FS70	J-13
378	VMU	J-14
378	WIDE VMU	J-14
389	Digimatic Sheet Metal Micrometers	B-43
395	Digimatic Tube Micrometers	B-46 to B-48

SERIES No.	Description	Page
400 - 499		
406	Outside Micrometers (Non-Rotating Spindle Type)	B-20
422	Digimatic Blade Micrometers	B-55
422	Digimatic Blade Micrometers (ABSOLUTE)	B-55
468	Digimatic Holtest	C-3
500 - 599		
500	ABSOLUTE Coolant Proof Caliper	D-3
500	ABSOLUTE Digimatic Caliper	D-5
500	Long ABSOLUTE Digimatic Caliper	D-7
505	Dial Caliper	D-14
506	Vernier Height Gage	D-53
510	Indicating Micrometers	B-63
511	ABSOLUTE Digimatic Bore Gages	C-47
511	Bore Gages	C-35 to C-38
511	Bore Gages (Blind Holes)	C-45
511	Bore Gages (with Micrometer Head)	C-42
511	Bore Gages (Short Leg Type)	C-39
511	Bore Gages (Small Holes)	C-33
511	Extension Rod	C-49
513	Dial Test Indicators	F-67 to F-76
513	Pocket Type Dial Test Indicators	F-73
514	Vernier Height Gage	D-53
515	Bore Gage Checker	C-51
515	CERA Caliper Checker	D-56
515	CERA Inside Micro Checker	C-28
515	Check Master	E-38
515	Depth Micro Checker	D-68
515	Digital Height Master	E-35
515	Height Master	E-35
515	Universal Height Master	E-37
516	Caliper Inspection Gauge Block Sets	E-12
516	Rectangular Gauge Block Accessories	E-17
516	Maintenance Kit for Gauge Blocks	E-29
516	Ceraston	E-30
516	Micrometer Inspection Gauge Block Sets	E-11 to E-12
516	Accessories for Rectangular Gauge Blocks	E-19 to E-20
516	Rectangular Gauge Block Sets	E-7 to E-8
516	Square Gauge Block Accessories Set	E-25
516	Square Gauge Block Sets	E-21
516	Step Master	E-27
517	Black Granite Surface Plates	E-47 to E-48
518	Linear Height	D-59
518	QM-Height	D-61
519	Transfer Stands	F-91
519	Mu-Checker (Electronic micrometer)	G-23
519	Mu-Checker Lever/Cartridge Probe Heads	G-21
519	6CH Mu-Checker Counter	G-24
521	Calibration Tester	F-78
523	Dial Snap Meters	B-65
523	Snap Meters	B-66
525	FORMTRACER Avant D3000/4000	L-11
525	CS-3300	L-12
525	Formtracer Extreme CS-5000CNC	L-14
525	Formtracer Extreme CS-H5000CNC	L-14
525	Formtracer Extreme SV-C4500CNC	L-13
525	Formtracer Extreme SV-C4500CNC HYBRID TYPE1	L-13
526	Bore Gages (Extra Small Holes)	C-29
527	Vernier Depth Gage	D-71

SERIES No.	Description	Page
527	Depth Gage (Hook End Type)	D-72
530	Vernier Caliper	D-8
531	Vernier Caliper (Thumb Grip)	D-11
532	Vernier Caliper (Fine Adjustment)	D-10
534	Long Jaw Vernier Caliper	D-24 to D-25
536	Blade Type Caliper (Vernier types)	D-32
536	Hook Type Vernier Caliper	D-39
536	Inside Caliper	D-35
536	Neck Caliper	D-37
536	Offset Caliper (Vernier types)	D-27
536	Offset Centerline Caliper (Vernier types)	D-29
536	Point Caliper (vernier types)	D-31
536	Swivel Vernier Caliper	D-39
536	Tube Thickness Caliper	D-38
539	AT103 Linear Scales (Standard Type)	H-8
539	AT113 Linear Scales (Slim Type)	H-9
539	AT211-A/AT211-B Linear Scales (Slim and High Speed)	H-10
539	AT715 Linear Scales (Slim Type)	H-13
539	PSU-200 Pulse signal interface unit	H-20
539	PSU-251/252 Serial signal interface unit	H-20
542	EC Counter	F-25
542	EC Counter (for Linear Gage)	G-11
542	EH Counter (for Linear Gage)	G-12
542	EJ-102N/NE Counter, Interface Unit	G-13
542	LG100 (Environment-Resistant)	G-5
542	LG200 (Environment-Resistant and Slim Type)	G-7
542	LGH Linear Gage (0.01/0.005 µm resolution)	G-9
543	ABSOLUTE Digimatic Indicator ID-C (Peak-Value Hold Type)	F-10
543	ABSOLUTE Digimatic Indicator ID-C (Bore Gage Type)	F-12
543	ABSOLUTE Digimatic Indicator ID-C (Calculation Type)	F-14
543	ABSOLUTE Digimatic Indicator ID-C (Signal Output Function Type)	F-17
543	ABSOLUTE Digimatic Indicator ID-CNX	F-5 to F-7
543	ABSOLUTE Digimatic Indicator ID-N/B	F-8
543	ABSOLUTE Digimatic Indicator ID-SX2	F-3
543	Digimatic Indicator ID-H (High Accuracy and High Functionality Type)	F-21
543	High-performance ABSOLUTE Digimatic Indicator ID-F	F-23
544	Laser Scan Micrometer Accessories	G-32 to G-34
544	LSM-500S Laser Scan Micrometer	G-27
544	LSM-501S Laser Scan Micrometer	G-27
544	LSM-503S Laser Scan Micrometer	G-28
544	LSM-506S Laser Scan Micrometer	G-28
544	LSM-512S Laser Scan Micrometer	G-29
544	LSM-516S Laser Scan Micrometer	G-29
544	LSM-5200 Laser Scan Micrometer	G-31
544	LSM-6200 Laser Scan Micrometer	G-31
544	LSM-6902H Laser Scan Micrometer	G-30
544	LSM-9506 Laser Scan Micrometer	G-30
546	Contact Force Gage	F-82
547	ABSOLUTE Digimatic Depth Gage	D-79
547	ABSOLUTE Digimatic Thickness Gages	F-79 to F-81
550	ABSOLUTE Digimatic Caliper (Nib Style Jaws)	D-12
551	ABSOLUTE Digimatic Caliper (Nib Style, Standard Jaws)	D-13
552	ABSOLUTE Coolant Proof Carbon Fiber Caliper (with Standard Jaws)	D-15
552	ABSOLUTE Coolant Proof Carbon Fiber Caliper (with Long Jaws)	D-17
552	ABSOLUTE Coolant Proof Carbon Fiber Caliper (with Ceramic Jaws)	D-18
552	ABSOLUTE Coolant Proof Carbon Fiber Caliper (with Interchangeable Jaws)	D-19
565	Gauge Block Comparator GBCD-100A	E-31
565	Gauge Block Comparator GBCD-250	E-32

SERIES No.	Description	Page
568	ABSOLUTE Borematic	C-13 to C-16
570	ABSOLUTE Digimatic Height Gage	D-52
570	ABSOLUTE Digimatic Height Gage (with Ergonomic Base)	D-51
571	ABSOLUTE Digimatic Depth Gage	D-69 to D-70
571	ABSOLUTE Digimatic Depth Gage (Hook End Type)	D-73
571	Mini Depth Gage	D-75
572	ABSOLUTE Digimatic Scale Units	H-3 to H-6
573	ABSOLUTE Back-Jaw Centerline Caliper	D-30
573	ABSOLUTE Blade Type Caliper	D-32
573	ABSOLUTE Inside Caliper	D-33
573	ABSOLUTE Low Force Caliper	D-40
573	ABSOLUTE Neck Caliper	D-37
573	ABSOLUTE Offset Caliper	D-26
573	ABSOLUTE Offset Centerline Caliper	D-28
573	ABSOLUTE Point Caliper	D-31
573	ABSOLUTE Snap Caliper	D-41
573	ABSOLUTE Tube Thickness Caliper	D-38
575	ABSOLUTE Digimatic Indicator ID-U (Slim and Economical Design)	F-19
575	LGS Linear Gage (ABSOLUTE)	G-8
579	ST36 Linear Scales High Accuracy Type	H-16
579	ST46-EZA Linear Scales Compact Type	H-17
579	ST700 Linear Scales	H-18
579	ST1300 Linear Scales	H-19
700		
700	QUICKmini	B-68
800 - 899		
810	HARDMATIC HH-411	M-9
810	HM-100	M-3
810	HM-200	M-3
810	HR-200/300/400	M-8
810	HR-530	M-7
810	HR-600	M-5
810	HV-100	M-4
811	HARDMATIC HH-300	M-10

Mitutoyo

ALPHABETICAL INDEX

Description	SERIES No.	Page
3		
3-Wire Units	313	B-74
6		
6CH Mu-Checker Counter	519	G-24
A		
ABSOLUTE Back-Jaw Centerline Caliper	573	D-30
ABSOLUTE Blade Type Caliper	573	D-32
ABSOLUTE Coolant Proof Caliper	500	D-3
ABSOLUTE Coolant Proof Carbon Fiber Caliper (with Standard Jaws)	552	D-15
ABSOLUTE Coolant Proof Carbon Fiber Caliper (with Ceramic Jaws)	552	D-18
ABSOLUTE Coolant Proof Carbon Fiber Caliper (with Interchangeable Jaws)	552	D-19
ABSOLUTE Coolant Proof Carbon Fiber Caliper (with Long Jaws)	552	D-17
ABSOLUTE Digimatic Bore Gages	511	C-47
ABSOLUTE Digimatic Depth Gage (Hook End Type)	527	D-72
ABSOLUTE Boromatic	568	C-13
ABSOLUTE Digimatic Caliper	500	D-5
ABSOLUTE Digimatic Caliper (Nib Style Jaws)	550	D-12
ABSOLUTE Digimatic Caliper (Nib Style, Standard Jaws)	551	D-13
ABSOLUTE Digimatic Depth Gage	547	D-79
ABSOLUTE Digimatic Depth Gage	571	D-69 to D-70
ABSOLUTE Digimatic Depth Gage (Hook End Type)	571	D-73
ABSOLUTE Digimatic Height Gage	570	D-52
ABSOLUTE Digimatic Height Gage (with Ergonomic Base)	570	D-51
ABSOLUTE Digimatic Indicator ID-C (Peak-Value Hold Type)	543	F-10
ABSOLUTE Digimatic Indicator ID-C (Bore Gage Type)	543	F-12
ABSOLUTE Digimatic Indicator ID-C (Calculation Type)	543	F-14
ABSOLUTE Digimatic Indicator ID-C (Signal Output Function Type)	543	F-17
ABSOLUTE Digimatic Indicator ID-CNX	543	F-5
ABSOLUTE Digimatic Indicator ID-N/B	543	F-8
ABSOLUTE Digimatic Indicator ID-SX2	543	F-3
ABSOLUTE Digimatic Indicator ID-U (Slim and Economical Design)	575	F-19
ABSOLUTE Digimatic Micrometers	227	B-12
ABSOLUTE Digimatic Scale Units	572	H-3 to H-6
ABSOLUTE Digimatic Thickness Gages	547	F-79
ABSOLUTE Inside Caliper	573	D-33
ABSOLUTE Low Force Caliper	573	D-40
ABSOLUTE Neck Caliper	573	D-37
ABSOLUTE Offset Caliper	573	D-26
ABSOLUTE Offset Centerline Caliper	573	D-28
ABSOLUTE Point Caliper	573	D-31
ABSOLUTE Snap Caliper	573	D-41
ABSOLUTE Tube Thickness Caliper	573	D-38
AT103 Linear Scales (Standard Type)	539	H-8
AT113 Linear Scales (Slim Type)	539	H-9
AT211-A/AT211-B Linear Scales (Slim and High Speed)	539	H-10
AT715 Linear Scales (Slim Type)	539	H-13
AT1100 Linear Scales		H-12
AT1300 Linear Scales		H-11
B		
Back (for Dial Indicator)		F-61
Back Plunger Type Dial Indicators	2	F-55
Bevel Protractor	187	E-46
Black Granite Surface Plates	517	E-47
Blade Micrometers	122	B-57
Blade Type Caliper	536	D-32
Bore Gages	511	C-35
Bore Gages (Blind Holes)	511	C-45
Bore Gages (Extra Small Holes)	526	C-29
Bore Gages (Short Leg Type)	511	C-39
Bore Gages (Small Holes)	511	C-33
Bore Gages (with Micrometer Head)	511	C-42
Bore Gage Checker	515	C-51
Bore Gage Stand	215	C-32
Boromatic (ABSOLUTE)	568	C-13
C		
Calibration Tester	521	F-78
Caliper Inspection Gauge Block Sets	516	E-12
Caliper Type Micrometers	143	B-30
Can Seam Micrometers	147	B-58
CARBstrato Series		N-10
Cast Iron Base Comparator Stands	215	F-90
CERA Caliper Checker	515	D-56
Ceraston	516	E-30
Check Master	515	E-38
Clamping System		N-19
Clear Loupe	183	J-16
CMM Software MCOSMOS		N-14
CMM Software MiCAT Planner		N-15
CMM Software MSURF		N-17
Color-Coded Ratchet & Color Speeder Covers		B-75
Color-Coded Spindle Caps (for Dial Indicator)		F-64
Comparator Stands	215	F-90
Contact Force Gage	546	F-82
Contact Points (for Dial Indicator)		F-57
Contracer CV-2100	218	L-8
CRYSTA-Apex EX 1200R		N-6
CRYSTA-Apex V Series		N-4 to N-5
Coolant Proof Micrometers	293	B-7
Crimp Height Micrometers	112	B-60
CS-3300	525	L-12
D		
D-EV Display Unit (for Linear Gage)		G-25
Depth Gage Attachment (for Caliper)		D-76
Depth Micro Checker	515	D-68
Depth Micrometer	128	D-68
Depth Micrometer	129	D-66
Dial Caliper	505	D-14
Dial Depth Gage	7	D-77
Dial Gage Stands	7	F-86
Dial Height Gage	192	D-55
Dial Indicators (SERIES 1)	1	F-44 to F-49
Dial Indicators (SERIES 2)	2	F-28 to F-43 F-53 to F-54
Dial Indicators (SERIES 3)	3	F-50 to F-52
Dial Indicators (SERIES 4)	4	F-50 to F-52
Dial Indicator Tester UDT-2	170	F-78
Dial Snap Gage	201	F-83
Dial Snap Meters	523	B-65
Dial Test Indicator	513	F-67
Digimatic Blade Micrometers	422	B-55
Digimatic Blade Micrometers (ABSOLUTE)	422	B-55
Digimatic Bore Gages (ABSOLUTE)	511	C-47
Digimatic Caliper Type Micrometers	343	B-29
Digimatic Crimp Height Micrometers	342	B-59
Digimatic Crimp Height Micrometers (ABSOLUTE)	342	B-59
Digimatic Depth Micrometer	329	D-66

Description	SERIES No.	Page
Digimatic Disk Micrometers	323	B-35
Digimatic Disk Micrometers (Non-Rotating Spindle Type)	227	B-41
Digimatic Disk Micrometers (ABSOLUTE)	369	B-41
Digimatic Disk Micrometers (Non-Rotating Spindle Type)	369	B-40
Digimatic Gear Tooth Micrometers	324	B-38
Digimatic Height Gage		D-49 to D-52
Digimatic Holtest	468	C-3
Digimatic Indicator ID-H	543	F-21
Digimatic Inside Micrometers (Caliper Type)	345	C-25
Digimatic Micrometer Heads	350	B-84 to B-86
Digimatic Micrometer Heads (Display rotating type)	164	B-84
Digimatic Mini-Processor DP-1VA LOGGER	264	A-19
Digimatic Outside Micrometers	293	B-9 to B-10
Digimatic Outside Micrometers with Interchangeable Anvils	340	B-22
Digimatic Outside Micrometers (Non-Rotating Spindle Type)	406	B-20
Digimatic Point Micrometers	342	B-51
Digimatic Screw Thread Micrometers	326	B-32
Digimatic Sheet Metal Micrometers	389	B-43
Digimatic Spline Micrometers	331	B-49
Digimatic Thickness Gages	547	F-79
Digimatic Tube Micrometers	395	B-46 to B-48
Digimatic Tubular Inside Micrometers (Extension-Pipe Type)	339	C-22
Digimatic Tubular Inside Micrometers (Extension-Rod Type)	337	C-19
Digimatic Uni-Mike	317	B-61
Digimatic Universal Protractor	187	E-46
Digimatic V-Anvil Micrometers	314	B-53
Digimatic Crimp Height Micrometers	142	B-60
Digit Disk Micrometers	223	B-36
Digit Outside Micrometers	193	B-18
Digit Point Micrometers	142	B-52
Digit Spline Micrometers	131	B-50
Digit Tube Micrometers	295	B-46 to B-47
Digital Height Master	515	E-35
Disk Micrometers	123	B-36
Disk Micrometers (Non-Rotating Spindle Type)	169	B-42
DP-1VA LOGGER Digimatic Mini-Processor	264	A-19
E		
EC Counter	542	F-25
EC Counter (for Linear Gage)	542	G-11
EH Counter (for Linear Gage)	542	G-12
EJ-102N/NE Counter, Interface Unit	542	G-13
EV-16A (for Mu-Checker)	519	G-24
Extension Bases (Optional Accessory for Depth Gage)		D-76
Extension Rod	511	C-49
F		
FORMTRACER Avant C3000/4000	218	L-10
FORMTRACER Avant D3000/4000	525	L-11
FORMTRACER Avant S3000	178	L-9
Formtracer Extreme CS-5000CNC/CS-H5000CNC	525	L-14
Formtracer Extreme SV-C4500CNC	525	L-13
Formtracer Extreme SV-C4500CNC HYBRID TYPE1	525	L-13
FS objectives	378	J-15
FS70	378	J-13
G		
Gauge Blocks	516	E-3 to E-30
Gauge Block Comparator GBCD-100A	565	E-31
Gauge Block Comparator GBCD-250	565	E-32
Gauge Block with Calibrated Coefficient of Thermal Expansion		E-6
Gear Tooth Micrometers	124	B-39
Granite Base Comparator Stands	215	F-88
Groove Micrometers	146	B-67
H		
Hardmatic HH-300	811	M-10
Hardmatic HH-411	810	M-9
Height Master	515	E-35
High-performance ABSOLUTE Digimatic Indicator ID-F	543	F-23
High Precision Square	311	E-41
High-Accuracy Digimatic Micrometer	293	B-3
HM-100 Micro Vickers Hardness Testing Machines	810	M-3
HM-200 Micro Vickers Hardness Testing Machines	810	M-3
Holtest	368	C-7
Holtest (Type II)	368	C-11
Hook Type Vernier Caliper	536	D-39
HR-200/300/400 Rockwell Hardness Testing Machines	810	M-8
HR-530 Rockwell Hardness Testing Machines	810	M-7
HR-600 Rockwell Hardness Testing Machines	810	M-5
Hub Micrometers	147	B-58
HV-100 Vickers Hardness Testing Machines	810	M-4
Hyper MF/MF-U High-accuracy Measuring Microscope	176	J-9
Hyper QVWLI		K-6
I		
i-Checker	170	F-77
ID-C (Bore Gage Type)	543	F-12
ID-C (Calculation Type)	543	F-14
ID-C (Peak-Value Hold Type)	543	F-10
ID-C (Signal Output Function Type)	543	F-17
ID-CNX	543	F-5
ID-F	543	F-23
ID-H (High Accuracy and High Functionality Type)	543	F-21
ID-N/B	543	F-8
ID-SX2	543	F-3
ID-U (Slim and Economical Design)	575	F-19
Indicating Micrometers	510	B-63
Indicator Type Micrometers	107	B-21
Individual Inch Square Gauge Blocks		E-24
Individual Metric Square Gauge Blocks		E-23
Input Tools	264	A-6
Inside Caliper	536	D-35
Inside Micro Checker (CERA)	515	C-28
Inside Micrometers (Caliper Type)	145	C-26
Inside Micrometers (Interchangeable-Rod Type)	141	C-27
Interchangeable Backs (for Dial Indicators)		F-61
K		
KA-200 Counter (for Linear Scale)	174	H-14
L		
LEGEX Series		N-9
LG100 (Environment-Resistant)	542	G-5
LG200 (Environment-Resistant and Slim Type)	542	G-7
LGS-1012P Linear Gage (ABSOLUTE)	575	G-8
Limit Micrometers	113	B-62
LGH Linear Gage (0.2/0.1 µm, 0.01/0.005 µm)	542	G-9
LG QuickSetupTool (Application Software)		G-15

Mitutoyo

Description	SERIES No.	Page
Linear Height	518	D-59
Litematic	318	G-20
Long ABSOLUTE Digimatic Caliper	500	D-7
Long Jaw Vernier Caliper	534	D-24
LSM-500S Laser Scan Micrometer	544	G-27
LSM-501S Laser Scan Micrometer	544	G-27
LSM-503S Laser Scan Micrometer	544	G-28
LSM-506S Laser Scan Micrometer	544	G-28
LSM-512S Laser Scan Micrometer	544	G-29
LSM-516S Laser Scan Micrometer	544	G-29
LSM-5200 Laser Scan Micrometer	544	G-31
LSM-6200 Laser Scan Micrometer	544	G-31
LSM-6902H Laser Scan Micrometer	544	G-30
LSM-9506 Laser Scan Micrometer	544	G-30
M		
MACH-3A		N-11
MACH Ko-ga-me		N-13
MACH-V9106		N-12
Magnetic Stands	7	F-84
Maintenance Kit for Gauge Blocks	516	E-29
MCOSMOS		N-14
MeasureReport		A-18
MeasurLink®		A-25
MF Measuring Microscope	176	J-6
MF-U Universal Measuring Microscope	176	J-7
MiCAT Planner		N-15
Micro Jack	7	B-123
Micrometer Heads (Small/Ultra-Small Type)	148	B-87
Micrometer Heads (8 mm Diameter Spindle)	151	B-104 to B-107
Micrometer Heads (Small Standard type with Carbide-Tipped Spindle)	149	B-98 to B-99
Micrometer Heads (Differential Screw Translator Type)	110	B-117
Micrometer Heads (Short Thimble with Choice of Diameter)	148	B-89
Micrometer Heads (Small Standard Type)	148	B-92 to B-94
Micrometer Heads (Small Thimble Diameter Standard Type)	148	B-95 to B-97
Micrometer Heads (Midium-sized Type 8 mm Diameter Spindle)	151	B-104 to B-107
Micrometer Heads (Digit Counter type)	250	B-123
Micrometer Heads (High Accuracy and Resolution)	153	B-122
Micrometer Heads (Fine Spindle Feed of 0.1 mm/rev)	148	B-114
Micrometer Heads (Fine Spindle Feed of 0.25 mm/rev)	148	B-116
Micrometer Heads (Large Thimble Type)	152	B-119
Micrometer Heads (Locking-screw Type)	148	B-108 to B-111
Micrometer Heads (Medium-sized Standard Type)	150	B-100 to B-103
Micrometer Heads (Non-rotating Spindle Type)	153	B-112
Micrometer Heads (Long Stroke Non-rotating Spindle)	197	B-122
Micrometer Heads (Quick Spindle Feed of 1 mm/rev)	152	B-113
Micrometer Heads (XY-Stage Type)	152	B-121
Micrometer Inspection Gauge Block Sets	516	E-11
Micrometer Oil		B-74
Micrometer Stands	156	B-76
Mini Depth Gage	571	D-75
Mini Scope	183	J-16
MiSCAN Vision System		K-10
MiSTAR 555		N-3
MSURF		N-17
Mu-Checker Accessories	519	G-21
Mu-Checker (Analog or digital amplifier/display)	519	G-23
Mu-Checker Lever/Cartridge Probe Heads	519	G-21
Multiplexer MUX-10F	264	A-20
MUX-10F	264	A-20
N		
Neck Caliper	536	D-37
O		
Offset Caliper (Vernier types)	536	D-27
Offset Centerline Caliper (Vernier types)	536	D-29
Optical Flats	158	B-73
Optical Parallels	157	B-73
Optional Accessory (for Depth Gage)		D-76
Optional Accessories (for Dial Indicators)		F-62
Optional Accessories (for Height Gage)		D-57
Optional Accessories (for Height Master)	515	E-36
Optional Accessories (for LSM)	544	G-32 to G-34
Optional Accessories (for SJ-210/310)		L-4
Outside Micrometers	102	B-13
Outside Micrometers	103	B-15
Outside Micrometers with Interchangeable Anvils	104	B-24
Outside Micrometers with Anvil Extension Collars	105	B-26
P		
Paper Thickness Micrometers	169	B-34
PH-3515F	172	J-4
Pitch Gages	188	E-45
PJ-H30 Premium Benchtop Projector	303	J-3
PJ-PLUS Premium Benchtop Projector	302	J-3
Pocket Comparators	183	J-16
Pocket Type Dial Test Indicator	513	F-73
Point Caliper	536	D-31
Point Micrometers	112	B-52
Precision Leadscrews		B-126
Process Anlyzer Professional (MeasurLink®)		A-29
Process Manager (MeasurLink®)		A-29
PSU-200 (for Linear Scale)	539	H-20
PSU-251/252 (for Linear Scale)	539	H-20
PV-5110	304	J-4
Q		
Quick Image		K-14
QM-Data200	264	J-12
QM-Height	518	D-61
QS-L/AFC		K-13
QuantuMike	293	B-5
Quickmike (ABSOLUTE)	293	B-11
QUICKmini	700	B-68
QV ACCEL		K-5
QV Active		K-3
QV APEX Pro/QV HYPER Pro		K-4
QVH4 Pro		K-8
QV HYBRID TYPE1		K-8
QV TP Active		K-7
QV TP Pro		K-7
R		
Radius Gages	186	E-45
Ratchet Thimble Micrometers	102	B-14
Real-Time (for MeasurLink®)		A-27
Recommended Indicators (Accessories for Bore Gages)		C-50
Rectangular Gauge Blocks (Individual Metric)		E-13
Rectangular Gauge Block Accessories	516	E-17
Rectangular Gauge Block Accessories (Over 100 mm)	516	E-19

Description	SERIES No.	Page
Rectangular Gauge Block Sets (Metric/Inch)	516	E-7
Report Scheduler (for MeasurLink®)		A-28
ROUNDPAK		L-26
Roundtest Extreme RA-6000 CNC	211	L-24
Roundtest RA-10	211	L-21
Roundtest RA-120/120P	211	L-21
Roundtest RA-1600	211	L-22
Roundtest RA-2200	211	L-22
Roundtest RA-2200 PLUS	211	L-23
Roundtest RA-H5200	211	L-23
Roundtest RA-H5200 PLUS	211	L-24
ROUNDTRACER EXTREME	211	L-25
S		
Scanning Probes		N-18
Screw Thread Micrometers	125	B-31
Screw Thread Micrometers	126	B-32
SD (ABSOLUTE Digimatic Scale Units)	572	H-3
SENSORPAK		G-16
Setting Rings	177	C-52
Setting Standards for Outside Micrometers	167	B-70
Setting Standards for Screw Thread Micrometers	167	B-72
Setting Standards for V-Anvil Micrometers	167	B-72
Sheet Metal Micrometers	118	B-44
Sheet Metal Micrometer	119	B-45
Snap Meters	523	B-66
Spline Micrometers	111	B-50
Square Gauge Blocks (Individual Metric)		E-23
Square Gauge Block Accessories Set	516	E-25
Square Gauge Block Sets	516	E-21
Square Master	311	E-42
ST36 Linear Scales High Accuracy Type	579	H-16
ST46-EZA Linear Scales Compact Type	579	H-17
ST700 Linear Scales	579	H-18
ST1300 Linear Scales	579	H-19
Standard Scales	182	E-39
Steel Rules	182	E-43
Step Master	516	E-27
STRATO-Apex Series		N-7
Surftest Extreme SV-3000CNC	178	L-7
Surftest Extreme SV-M3000CNC	178	L-7
Surftest SJ-210	178	L-3
Surftest SJ-310	178	L-3
Surftest SJ-410	178	L-5
Surftest SJ-500	178	L-6
Surftest SJ-500P	178	L-6
Surftest SV-2100	178	L-6
Surftest SV-2100M4	178	L-6
Swivel Vernier Caliper	536	D-39
T		
TAGLENS Varifocal Lens		J-15
Telescoping Gage Set	155	B-69
Thickness Gages	7	F-79
Thickness Gages	184	E-44
Thread Pitch Gages	188	E-45
TM Toolmakers' Microscopes	176	J-10
Transfer Stands	519	F-91
Tube Micrometers	115	B-46 to B-48
Tube Thickness Caliper	536	D-38
Tubular Inside Micrometers (Extension-Pipe Type)	139	C-23 to C-24
Tubular Inside Micrometers (Extension-Pipe Type)	140	C-23
Tubular Inside Micrometers (Extension-Rod Type)	137	C-20
Tubular Inside Micrometers (Single-Rod Type)	133	C-17
U		
U-WAVE Series		A-9
ULTRA QV		K-6
UMAP Vision System TYPE2		K-9
Uni-Mike	117	B-61
Universal Bevel Protractor	187	E-46
Universal Height Master	515	E-37
USB Input Tool Direct	264	A-5
V		
V-Anvil Micrometers	114	B-54
Vernier Caliper	530	D-8
Vernier Caliper (Fine Adjustment)	532	D-10
Vernier Caliper (Hook Type)	536	D-39
Vernier Caliper (Long Jaw)	534	D-24
Vernier Caliper (Nib Style Jaws)	160	D-22
Vernier Caliper (Swivel)	536	D-39
Vernier Caliper (Thumb Clamp)	531	D-11
Vernier Depth Gage	527	D-71
Vernier Height Gage	506	D-53
Vernier Height Gage	514	D-53
Vision Unit	359	J-11
VMU	378	J-14
W		
WIDE VMU	378	J-14
Working Standard Scales	182	E-40
Z		
ZERO CERA Blocks		E-6

Mitutoyo



Digimatic Gage/PC Data Input Device
USB Input Tool IT-020U/IT-007R

Refer to page A-6 for details.



Mini-Printer Equipped with Data Logging Function
DP-1VA LOGGER

Refer to page A-19 for details.



Measurement Data Wireless Communication System
U-WAVE Series

Refer to pages A-9 to A-14 for details.

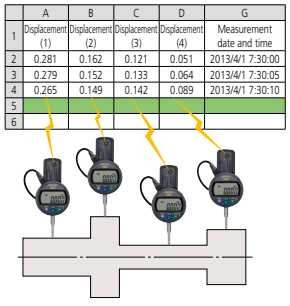

	A	B	C	D	G
1	Displacement (1)	Displacement (2)	Displacement (3)	Displacement (4)	Measurement date and time
2	0.281	0.162	0.121	0.051	2013/4/1 7:30:00
3	0.279	0.152	0.133	0.064	2013/4/1 7:30:05
4	0.265	0.149	0.142	0.089	2013/4/1 7:30:10
5					
6					

Measurement Data Management
USB-ITPAK V2.1/V3.0

Refer to pages A-15 to A-17 for details.

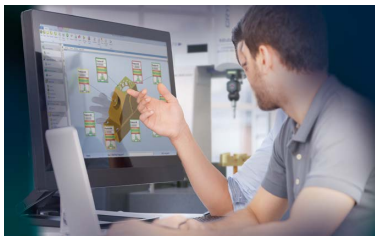

Measurement Data Network System
MeasurLink®

Refer to pages A-25 to A-30 for details.

A

Measurement Data Management

MeasurLink® ENABLED
Data Management Software by Mitutoyo

Measurement Data Network System

MeasurLink® is a measurement data management system based on databases (SQL Server). You can build a network to manage the measurement results and measuring machines by simply combining the functions necessary for your purpose.

MeasurLink® is a registered trademark of Mitutoyo Corporation in Japan and Mitutoyo America Corporation in the United States.

MiCAT
Mitutoyo Intelligent Computer Aided Technology
the standard in world metrology software
MeasurLink

Measurement Program

"MiCAT Planner" automatic measurement program generation software is supported.

INDEX

Measurement Data Management

Example of Measurement Data Management System Design	A-3
USB Input Tool Direct	A-5
Input Tool Series	A-6
What is the U-WAVE Series?	A-7
U-WAVE	A-9
Measurement Data Collection Software **USB-ITPAK V2.1/V3.0**	A-15
MeasureReport	A-18
Digimatic Mini-Processor **DP-1VA LOGGER**	A-19
Multiplexer **MUX-10F**	A-20
Digimatic Data Cable Selector	A-21
Gage connector dimensions	A-23
MeasurLink®	A-25
Real-Time	A-27
Report Scheduler	A-28
Process Analyzer Professional	A-29
Process Manager	A-29
Gage R&R	A-30
Gage Management	A-30
Quick Guide to Precision Measuring Instruments	A-31

Mitutoyo

Example of Measurement Data Management

A system for recording and analyzing measurement results from various Mitutoyo measuring instruments for quality assurance purposes.

A

Step 1

Recording measurement results

No more transcribing

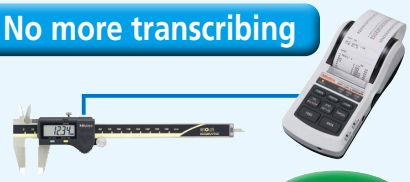

Equipped with the data logger function, it allows batch transfer of stored data to a PC with a USB cable.

DP-1VA LOGGER A-19

Direct data input to a PC

Connecting cable-integrated USB-ITN



USB Input Tool Direct A-5

Lineup of two models with different output specifications
IT-020U / IT-007R



Input Tool Series A-6

Connect to a RS-232C interface PC with 4 channels and a sequencer



Multiplexer MUX-10F A-20

Wireless

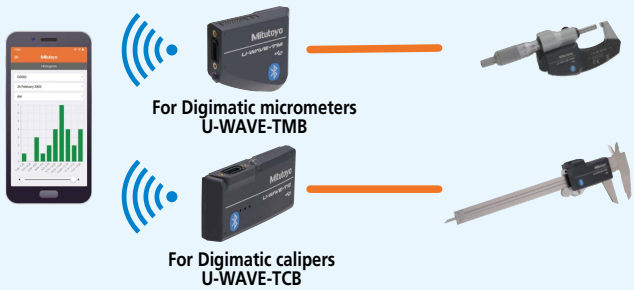

A-8

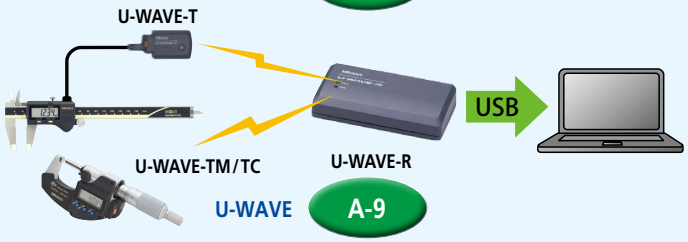

U-WAVE A-9

Step 2

Software dedicated to inspection and quality control

Inspection certificate creation

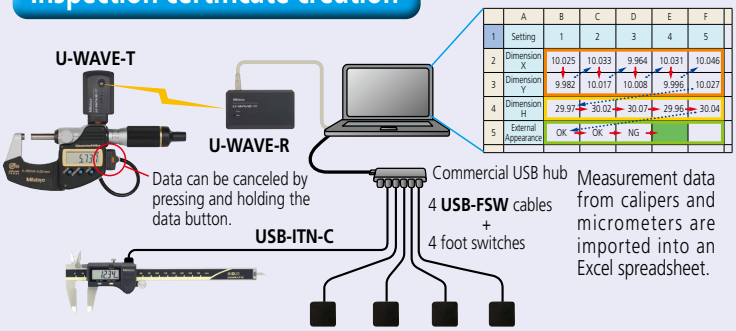

Measurement data from calipers and micrometers are imported into an Excel spreadsheet.

USB-ITPAK A-15

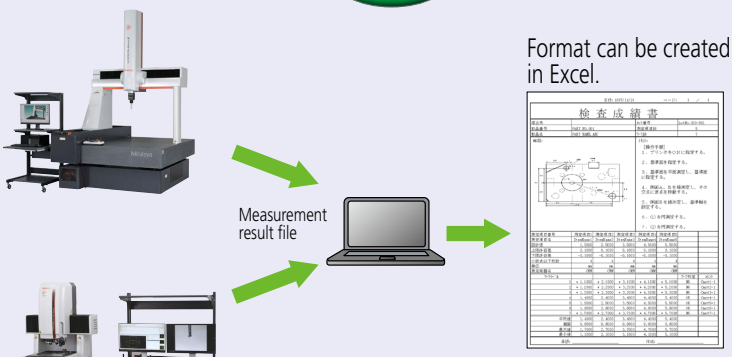

Format can be created in Excel.

MeasureReport A-18

Statistical Process Control

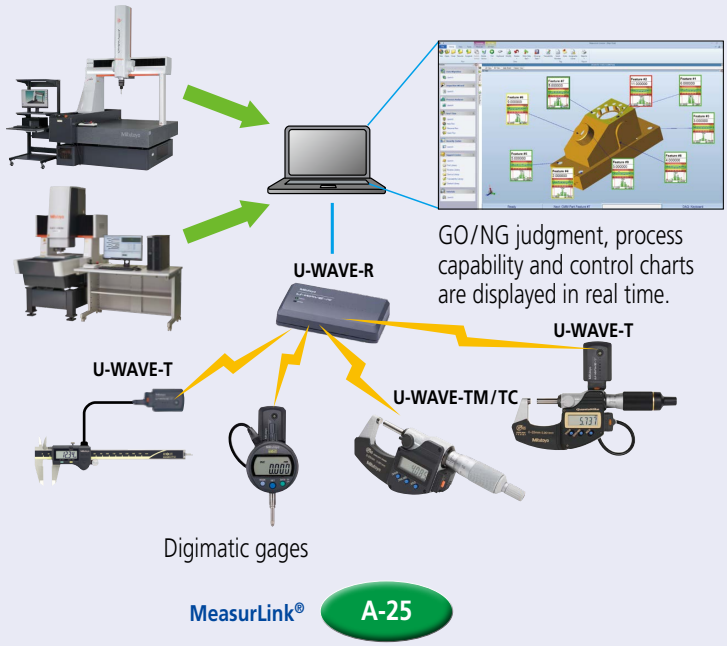

GO/NG judgment, process capability and control charts are displayed in real time.

MeasurLink® A-25

Mitutoyo reserves the right to change any or all aspects of any product specification, including prices, designs and service content, without notice.

System Design

Step 3

Network the quality control information of whole the factory

Unify and control the measurement results through the network

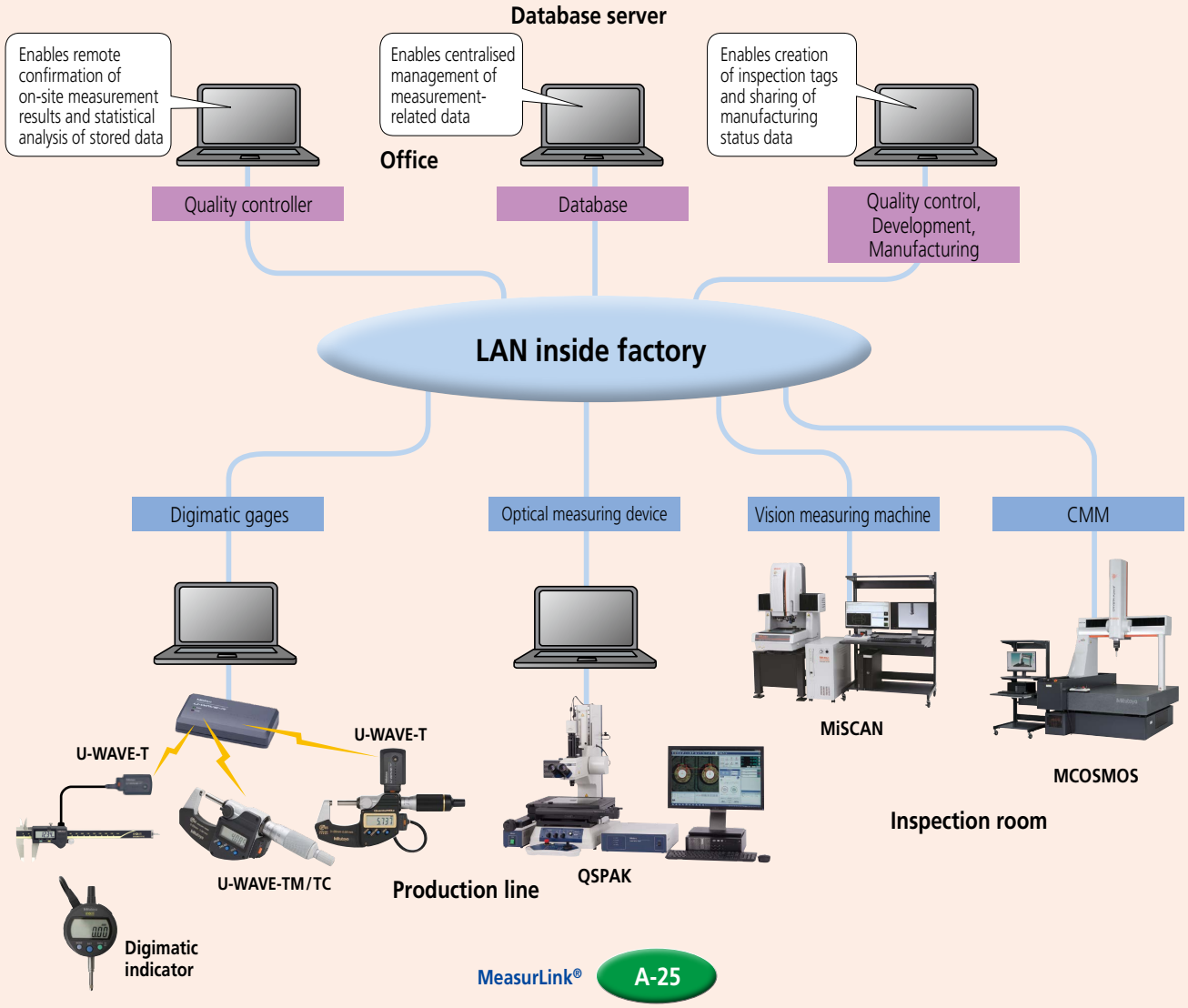

MeasurLink® A-25

Condition Monitor

Conduct preventive maintenance through CMM status monitoring



Status Monitor

Can remotely monitor measuring machines

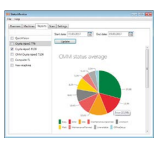

Mitutoyo reserves the right to change any or all aspects of any product specification, including prices, designs and service content, without notice.

Mitutoyo

A

Digimatic Gage/PC Data Input Device
USB Input Tool Direct USB-ITN

- Converts measurement data to keyboard signals and directly inputs them to spreadsheet software such as Excel and memo pad.
- Measurement data collection software (optional) is also available (refer to page A-15).



Input data to the PC with the push of a button.

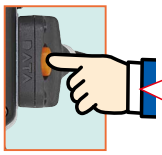

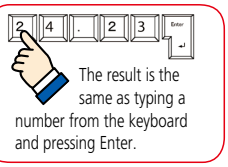

Just press the data button to send the displayed value to the PC.

Can be connected directly to a USB port on a PC with 1 cable.

Main specification

- Output compatibility: USB1.0 or USB2.0
- Supporting driver software: Switchable between 2 items below
  1) When using standalone: HID keyboard device*
  2) When using with **USB-ITPAK V2.1/V3.0**: Virtual COM port (VCP)
- Communication speed: 12 Mbps (Full Speed)
- Power supply: USB bus power
- Mass: 59 g
- USB2.0 certificate
- Conforms to EU EMC Directive.

* Since this device is compatible with Windows standard driver software, dedicated driver software is not required.

Note: Information regarding **USB-ITPAK V3.0** can be downloaded from our website.

USB-ITN System Configuration

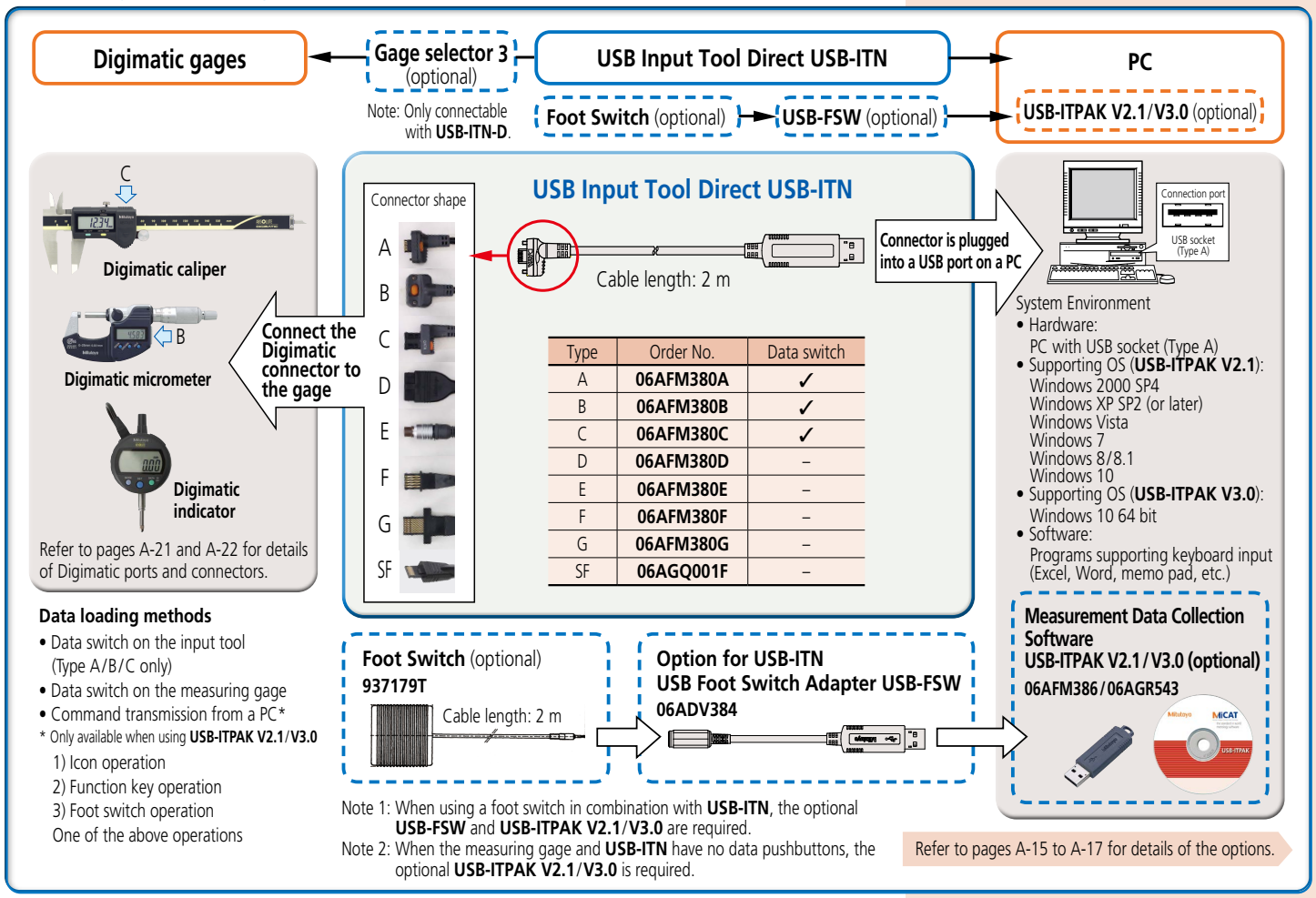

Type	Order No.	Data switch
A	06AFM380A	✓
B	06AFM380B	✓
C	06AFM380C	✓
D	06AFM380D	–
E	06AFM380E	–
F	06AFM380F	–
G	06AFM380G	–
SF	06AGQ001F	–

Refer to pages A-15 to A-17 for details of the options.

Mitutoyo reserves the right to change any or all aspects of any product specification, including prices, designs and service content, without notice.

Specifications of IT-007R RS-232C Communication

• Output specification: RS-232C compliant
Communication method: Full duplex
Communication speed: 2400 bps (fixed)
Bit configuration: Start bit 1
Data length 8
(Most significant bit, 0 (fixed))
Parity, None
Stop bit 1
Flow control: None
Home position: DCE (modem definition)

• Data format

1) When data output

Output order →

D1	D2	D3	D4	D5	D6	D7	D8	D9	D10	D11	D12	D13
"0 1 A" (fixed)				Data parts (Floating decimal point)								CR
		Signs, "+" or "–"										

2) Error code output

D1	D2	D3	D4
"9 1" (fixed)			CR

Error code No.
1: No data input
2: Loaded data with format other than specified

Example of format
Display Output data
0.123 → 01A + 0000.123CR →
–0.1234 → 01A – 000.1234CR

• Data request signal
Data can be output by transmitting a character from the PC.

• Connector specification and power supply from the PC

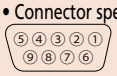

This product operates while accumulating the power supplied from the PC. A second or more input interval is required.

Pin No.	Symbol	in/out	Description of functions
1	(N.C.)	—	No connection
2	RXD	OUT	Data output from this product to the PC
3	TXD	IN	Data input from the PC to this product
4	DTR	IN	+12 V power supply from the PC*
5	GND	—	Ground
6	DSR	OUT	Not used
7	RTS	IN	+12 V power supply from the PC*
8	CTS	OUT	Not used
9	(N.C.)	—	No connection

* When connecting to a sequencer, a power supply is required.
Input voltage: Supplied in the range 6 V to 16 V
Power supply terminal: Supplied to pins 4 and 7
Note: "4" and "6", "7" and "8" are connected with each other inside this product.

Measurement Data Input Unit
Input Tool SERIES IT-020U/IT-007R

USB Keyboard Signal Conversion Type IT-020U

The IT-020U, a popular USB input tool that enables easy data recording. Allows you to perform inspection work more efficiently.

USB-connected input tool housed in a dedicated box with a large data switch and a foot switch connector socket. When combined with the optional software **USB-ITPAK V2.1/V3.0**, it allows you to improve inspection work efficiency.



IT-020U

Main Specifications of IT-020U

Supported driver software: Changeable between two types
Output specification: USB2.0 or USB1.0
1) Stand-alone: HID keyboard device*
2) Using **USB-ITPAK V2.1/V3.0**: Virtual COM port (VCP)
Communication speed: 12 Mbps (Full Speed)
Power supply: USB bus power
USB2.0 certificate
Conforms to EMC Directive
* This product is compatible with the standard driver software for Windows. No dedicated driver software is required.

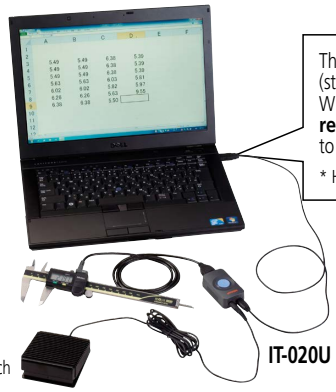

The HID* keyboard device (standard driver software for Windows) is **automatically recognized** when connected to a USB port.

* HID (Human Interface Device)

RS-232C Communication Conversion Type IT-007R

Input tool for RS-232C communication

Control is available by transmitting data request commands via RS-232C.
For example, production engineers can create communication programs to load the measurement data by transmitting a command from the PC.
This product is a compact and low-cost RS-232C communication interface, which is convenient when it is installed in a machine tool or dedicated device to feed back measurement data.



IT-007R

IT-020U/IT-007R System Configuration

Digimatic gage — **Connecting cable** (optional) — **Switch box** (optional) — **Input tool** — **PC**

Foot switch (optional)

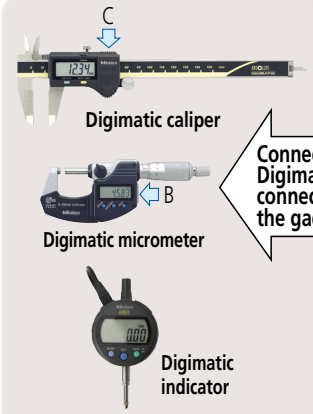

Digimatic caliper
Digimatic micrometer
Digimatic indicator

Refer to pages A-21 and A-22 for details of Digimatic ports and connectors.

Connect the Digimatic connector to the gage

Connector shape
A B C D E F G SF

Connecting cable (optional)
Refer to pages A-21 and A-23 for details.

Connector
8 types (A to G and SF)
+4 L types

Cable length:
1 m or 2 m
1)

Foot switch (optional)
937179T

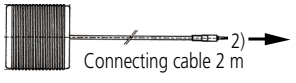

Gage selector 3 (optional)
939039

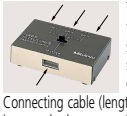

This selector can connect up to 3 measuring gages and switching is available with the slide switches without changing connecting cables.
Connecting cable (length: 1 m) between two input tools is a standard accessory (**936937**).

USB keyboard signal conversion model

Model: **IT-020U**
264-020

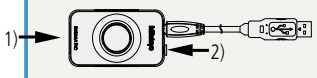

Connect the unit to a USB port of the PC

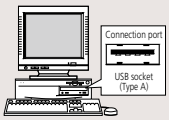

System Environment
• Hardware:
PC with USB socket (Type A)
• Supporting OS (**USB-ITPAK V2.1**):
Windows 2000 SP4
Windows XP SP2 (or later)
Windows Vista
Windows 7
Windows 8/8.1
Windows 10
• Supporting OS (**USB-ITPAK V3.0**):
Windows 10 64 bit
• Software:
Programs supporting keyboard input (Excel, Word, memo pad, etc.)
USB-ITPAK V2.1/V3.0 (optional)

Note: Information regarding **USB-ITPAK V3.0** can be downloaded from our website.

RS-232C communication conversion type

Model: **IT-007R**
264-007

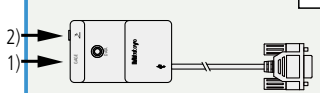

Data output is available by transmitting data request commands from the PC.

Connect the unit to a serial port of the PC

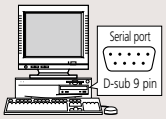

System Environment
• Hardware:
PC or sequencer with a serial port (D-sub 9 pin)
• Software:
A program compatible with the RS-232C communication (such as a hyper terminal) is required.

Mitutoyo reserves the right to change any or all aspects of any product specification, including prices, designs and service content, without notice.

Mitutoyo

What is the U-WAVE Series?

A

- A "Measurement Data Wireless Communication System" that, with simple operations, allows you to send data from Digimatic gages to a PC, etc. via wireless communication. The following three types are currently available.

1) U-WAVE

Comprises of a receiver (**U-WAVE-R**) that connects to a PC and a transmitter (**U-WAVE-T**) that connects to a Digimatic gage.

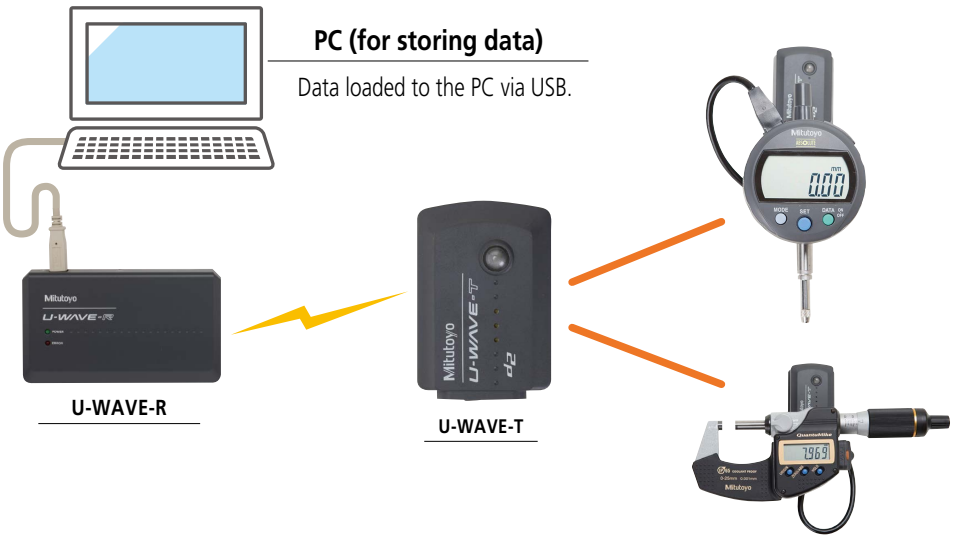

2) U-WAVE fit

Dedicated for Digimatic calipers and Digimatic micrometers, it inherits the functions and performance of **U-WAVE** but is more compact, thinner, and with improved operability.

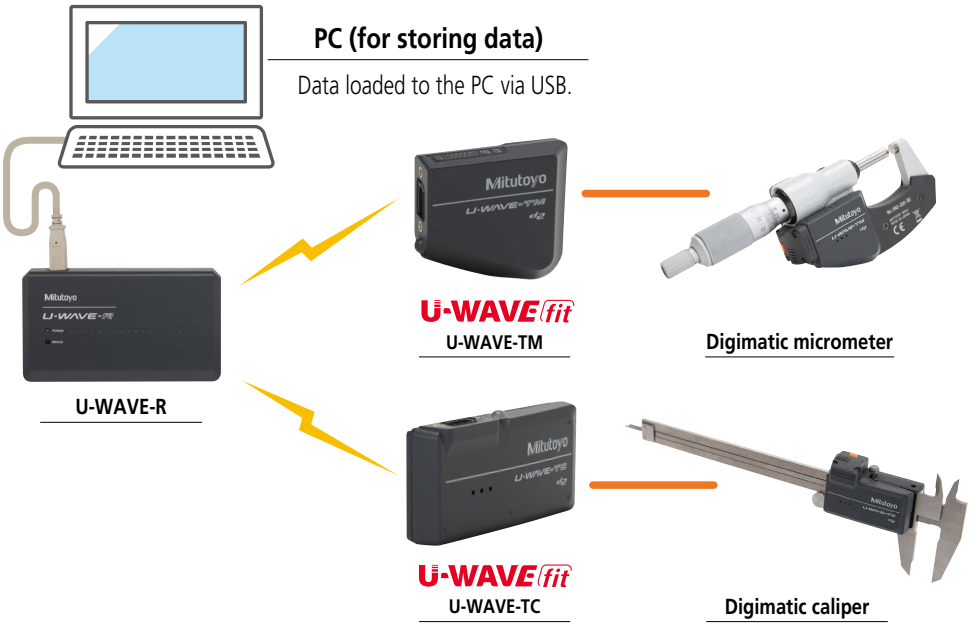

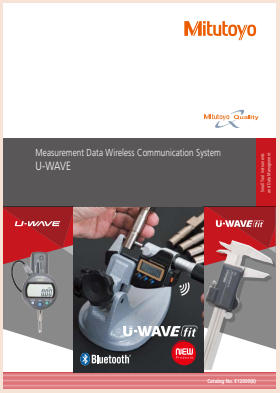

Refer to the Measurement Data Wireless Communication System **U-WAVE** Brochure (**E12000**) for more details.

Mitutoyo reserves the right to change any or all aspects of any product specification, including prices, designs and service content, without notice.

3) Mitutoyo *Bluetooth*® U-WAVE

U-WAVE fit with **Bluetooth®** capability. It can not only connect to a PC, but also other devices that support Bluetooth®, such as a smartphone or tablet without the need for an external receiver unit.

Note: Connectivity of the dedicated **Mitutoyo *Bluetooth*® U-WAVE** application and **U-WAVE-TMB/TCB** to every single Bluetooth® device is not guaranteed.

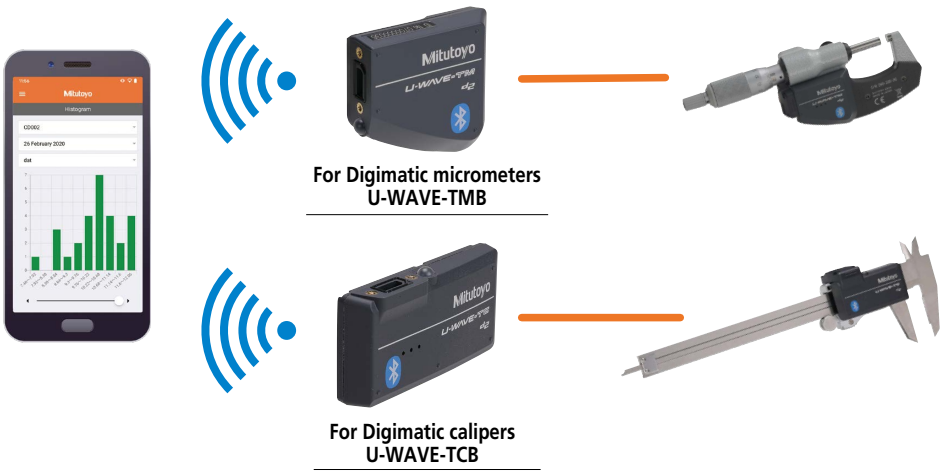

Function comparison table

	U-WAVE	U-WAVE fit*1	Mitutoyo *Bluetooth*® U-WAVE*1
Transmission method	Original <based on IEEE802.15.4 (2.4 GHz)>		Bluetooth®
Communication distance	Approx. 20 m (line of sight)		Approx. 16 m (line of sight)
Connectible model	Digimatic gages	Digimatic calipers and micrometers	
Dedicated application/ software	**U-WAVEPAK** (included with **U-WAVE** receiver) **USB-ITPAK***2		**U-WAVEPAK-BW** **U-WAVEPAK-BM** **U-WAVE Navi** **USB-ITPAK***2

*1 Please check the list of compatible models since the unit may not be attachable to some models.
*2 Please note that **USB-ITPAK** may not be recognized if your computer's OS build is old.



Refer to the Measurement Data Wireless Communication System **U-WAVE** Brochure (**E12000**) for more details.

Mitutoyo reserves the right to change any or all aspects of any product specification, including prices, designs and service content, without notice.

A

Measurement Data Wireless Communication System U-WAVE-TMB/TCB (Mitutoyo *Bluetooth*® U-WAVE)

- Bluetooth® communication allows for wireless transmission of measurement data from digimatic micrometers and calipers to PCs, smartphones, tablets and other such terminals.
- Bluetooth® communication not only allows cost reduction, as it does not require the conventional dedicated receiver unit (U-WAVE-R), but it also improves operability.
- **U-WAVEPAK-BM** (free), the measurement support application software for smartphones is available for download from app stores (Google Play, Apple Store).

U- WAVEPAK-BM

Get from Google Play

Download from App Store

- **U-WAVEPAK-BW** (free), the communication software for transferring measurement data to optional computer software (**USB-ITPAK, MeasurLink®**) is available for download from our company's website.
https://www.mitutoyo.co.jp/eng/contact/products/u-wave/

Mitutoyo *Bluetooth*® U-WAVE fit system configuration



Measurement Navigation Application Mitutoyo U-WAVE Navi

A new application tool for **Mitutoyo *Bluetooth*® U-WAVE** is now available.
It allows to set measuring points, methods (which tool to use), cautions in each measuring process.
By allowing the insertion of image files into procedures, it enables anyone to measure in the same way and correctly.
Since it also allows for entering the inspectors' names, it can be used to keep records of "when, where, who" performed the measurement.
Workpiece information, procedures, as well as measurement results can be managed on the application.
It can also output data in CSV format.

Get from Google Play

Mitutoyo U-WAVE Navi is available for free download from Google Play.

Master how to use both applications according to your purpose.

	Mitutoyo U-WAVE Navi	U-WAVEPAK-BM
Purpose	Using the application, create a measurement procedure, display and navigate the measurement, and manage the measurement results	Measure a workpiece continuously to perform a simple trend management
Possible actions (Functions)	Create/perform a measurement procedure (including GO/NG judgement) Navigate a measurement procedure Manage/transfer a measurement procedure Display a list of measurement results Transfer a measurement result	Judgment Data logging Graphical display of measurement result Display the histogram of measurement results Transfer a measurement result (log data)
Display language	Japanese/English (Depends on the OS settings)	English
Compatible OS	Android 7.0 or later (iOS not supported)	Android 7.0 or later/iOS 10.0 or later

U-WAVE-TMB/TCB (Mitutoyo *Bluetooth*® U-WAVE) System Communication Specifications

• Wireless Communication Specifications

Wireless communication	Bluetooth® 4.2 Low Energy
Wireless communication distance	Approx. 16 m (line of sight) Approx. 10 m (in a factory environment)
Transmission output	3.2 mW (5 dBm) or less (Class2)
Modulation method	FH-SS (Frequency-hopping spread spectrum)
Communication frequency	2.4 GHz band

Note 1: To use **U-WAVE-TMB/TCB**, conformity to the radio law of each country is required. Please contact your dealer or nearest Mitutoyo sales office.
Note 2: **U-WAVE-TMB/TCB** is not compatible with **U-WAVE fit**, for which communication specifications are different.
Note 3: Connectivity of **U-WAVE-TMB/TCB** to every single Bluetooth® device is not guaranteed.

Optional Accessories

Model No.	**USB-ITPAK V2.1/V3.0**
Order No.	**06AFM386/06AGR543**
Compatible OS (Windows)	**USB-ITPAK V2.1**: Windows 2000 SP4 to Windows 10 **USB-ITPAK V3.0**: Windows 10 64 bit only
Compatible Excel version	**USB-ITPAK V2.1**: Excel 2002, 2003, 2007, 2010, 2013, 2016, Microsoft 365 **USB-ITPAK V3.0**: Excel 2010, 2013, 2016, Microsoft 365

Note: Applicable only when **U-WAVEPAK-BW** is used.

USB-ITPAK V2.1/V3.0



A USB dongle must be connected to the PC running the software.

Note: Google Play and the Google Play logo are trademarks of Google LLC. Apple and the Apple logo are trademarks of Apple Inc.

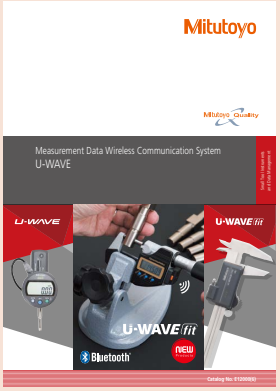

Refer to the Measurement Data Wireless Communication System **U-WAVE** Brochure (**E12000**) for more details.

Mitutoyo reserves the right to change any or all aspects of any product specification, including prices, designs and service content, without notice.

Measurement Data Wireless Communication System
U-WAVE-TMB/TCB (Mitutoyo *Bluetooth*® U-WAVE)

Transmitter/Receiver



264-626



264-625

SPECIFICATIONS

	For Digimatic micrometers		For Digimatic calipers	
Order No.	**264-626***	**264-627***	**264-624***	**264-625***
Model	**U-WAVE-TMB** (IP67 type)	**U-WAVE-TMB** (buzzer type)	**U-WAVE-TCB** (IP67 type)	**U-WAVE-TCB** (buzzer type)
Protection level	IP67	N/A	IP67	N/A
Data reception indication	LED	LED, buzzer	LED	LED, buzzer
Power supply	Lithium battery CR2032×1			
Battery life	Approx. 1 year under normal conditions of use, but varies according to usage.			
Mass (g)	18			

* Order No. differs depending on the destination country. Add the following suffix to the order No.: K for Korea, B for Brazil and Argentina.



02AZF310



02AZF300

Choose a connecting unit compatible with your gage.

Order No.	**02AZF310**	**02AZF300**
Protection level	IP67	N/A
Mass (g)	6	
Connectable transmission unit	**U-WAVE-TMB/TCB** (for dust/water-proof type)	**U-WAVE-TCB** (for standard type)

Note: Water-proof performance is ensured only when attached to measuring instruments of IP67 type.

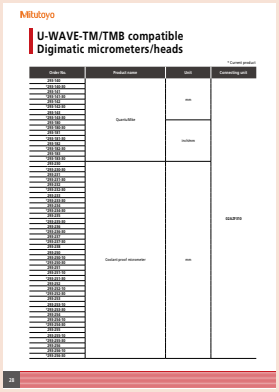
Mitutoyo
U-WAVE-TM/TMB compatible
Digimatic micrometers/heads

For model compatibility information, refer to a separate sheet provided with **Catalog No. E12000**: Measurement Data Wireless Communication System **U-WAVE**.

Compatibility of measuring tool and unit

		Assembled appearance	Connecting unit	Transmitter
For micrometers	Standard		**02AZF310** 	**264-627** **U-WAVE-TMB** (buzzer type) 
	QuantuMike			**264-626** **U-WAVE-TMB** (IP67 type) 
For calipers	Standard		**02AZF300** 	**264-625** **U-WAVE-TCB** (buzzer type) 
	Coolant-proof type	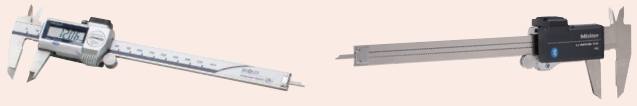	**02AZF310** 	**264-624** **U-WAVE-TCB** (IP67 type) 

Mitutoyo reserves the right to change any or all aspects of any product specification, including prices, designs and service content, without notice.

Mitutoyo

A

Measurement data wireless communication system U-WAVE-TM/TC (U-WAVE fit)

- The transmitter is designed to fit in the space behind the display, and the connecting cable has been replaced by a rigid connector.
- Data from digimatic tools can be sent to a PC via wireless communication.
- Connecting the **U-WAVE-R** to the PC and starting **U-WAVEPAK** (software), enables data input to spreadsheet such as Excel, memo pad, etc.
- Optional software **USB-ITPAK** is available. (refer to page A-15)

U-WAVE fit system configuration

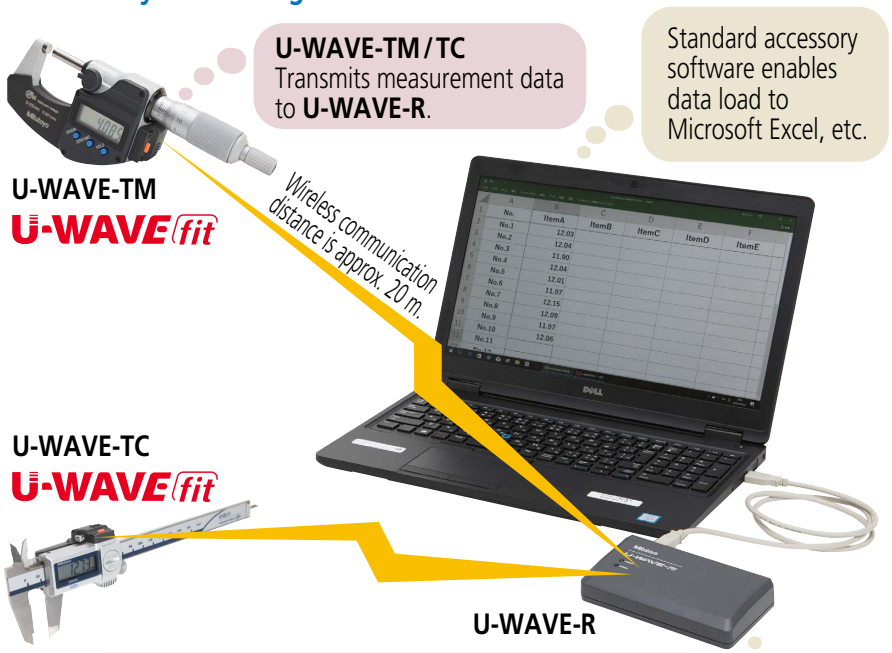

U-WAVE-R

Model	U-WAVE-R
Order No.*	02AZD810D/02AZD810E/02AZD810F
Power supply	USB bus power system
Number of **U-WAVE-R** units that can be connected to one PC	Up to 15
Number of **U-WAVE-T** units that can be connected	Up to 100
External dimensions	140×80×31.6 mm
Mass (g)	130

* Order No. differs depending on the destination country.

U-WAVE-R main unit



USB2.0 cable (1 m) attached

U-WAVEPAK



U-WAVEPAK software (standard accessory)

System Environment: Compatible OS
Windows 2000 Professional (SP4 or later)
Windows XP Home Edition (SP2 or later)
Windows XP Professional (SP2 or later)*
Windows Vista*, Windows 7*, Windows 8/8.1*
Windows 10*

* 32-bit, 64-bit OS supported
<Versions confirmed operational on Windows 10>
・**U-WAVEPAK Version1.020** or later

Connectability confirmed for tablet PC
・Microsoft Surface Pro 6 (the version whose operation on Windows 10 Professional is confirmed)
・Required environment: DVD drive (required for installation), USB port ×2 ports or more

Note 1: Cannot be connected to a device other than a PC (such as **DP-1VA LOGGER**, sequencer etc.).
Note 2: Also available for download (free) from our company's website.

U-WAVE-TM/TC (U-WAVE fit) System Communication Specifications

• Wireless communication

Wireless specifications	Original <based on IEEE802.15.4 (2.4 GHz)>
Wireless communication distance	Approx. 20 m (line of sight)
Wireless communication speed	250 kbps
Transmission output	2.5 mW (4 dBm) or less
Modulation method	DS-SS (Direct Sequence - Spread Spectrum) Resistant to interfering signals and noise
Communication frequency	2.405-GHz band (ISM band: Universal frequency)
Used band	15 channels (2.405 to 2.475 GHz at intervals of 5 MHz) The noise search function avoids interference with other communication devices.

Note: To use **U-WAVE-TM/TC**, the conformity to the radio law of each country is required. If you use this product outside the country of purchase, please contact your dealer or nearest Mitutoyo sales office.

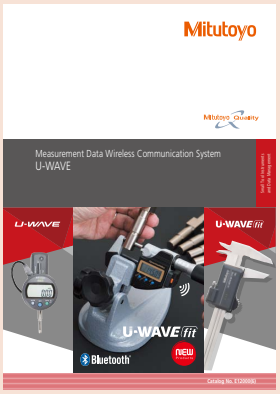

Refer to the Measurement Data Wireless Communication System **U-WAVE** Brochure (**E12000**) for more details.

Main specifications of U-WAVEPAK

- Setup of dedicated driver software (USB and virtual COM port)
- Initial setting of ID number and frequency selection (required only once for the first time)
- Load data to Microsoft Excel or Notepad through the data interface function

Mitutoyo reserves the right to change any or all aspects of any product specification, including prices, designs and service content, without notice.

Measurement data wireless communication system U-WAVE-TM/TC (U-WAVE fit)



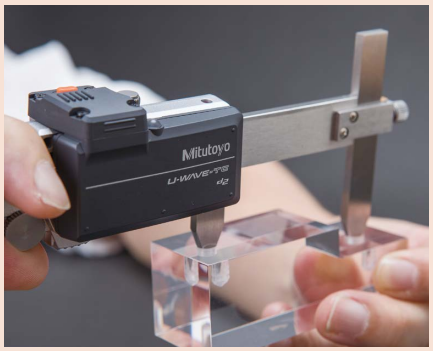

Type of transmission unit



264-622



264-621

SPECIFICATIONS

IP67 type is resistant to water and dust ingress. Buzzer type notifies data reception by buzzer sound and LED.

Connectable measuring instruments	Micrometer		Caliper	
Order No.	**264-622***	**264-623***	**264-620***	**264-621***
Model	**U-WAVE-TM** (IP67 type)	**U-WAVE-TM** (Buzzer type)	**U-WAVE-TC** (IP67 type)	**U-WAVE-TC** (Buzzer type)
Protection Rating	IP67	N/A	IP67	N/A
Data reception indication	LEDs	Buzzer and LEDs	LEDs	Buzzer and LEDs
Power supply	Lithium battery CR2032×1			
Battery life	Approx. 400,000 times continuous data transmission			
External dimensions (mm)	41.9×12.9×38.8		56×11.45×30.4	
Mass (g)	18			

* Order No. differs depending on the destination country. Add the following suffix to the order No.: K for Korea, B for Brazil and Argentina.



02AZF310



02AZF300

Fixed to transmission unit and inserted into output connector of Digimatic gage.

Order No.	**02AZF310**	**02AZF300**
Protection level	IP67	N/A
Mass (g)	6	
Connectable transmission unit	**U-WAVE-TM/TC** (for dust/water-proof type)	**U-WAVE-TC** (for standard type)

Note 1: **02AZF310** ensures water-proof performance only when attached to measuring instruments of IP67 type.
For information on supported connecting units, please contact your local Mitutoyo sales office.
Note 2: Water-proof performance is ensured only when attached to measuring instruments of IP67 type.

Compatibility of measuring tool and unit

Digimatic gage		Assembled appearance (Front/Back)	Connecting unit	Transmission unit
Micrometer	Standard	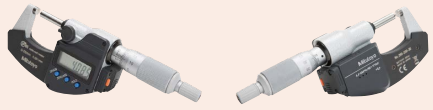	 **02AZF310**	**264-623*** **U-WAVE-TM** (buzzer type)  U-WAVE fit
	QuantuMike			**264-622*** **U-WAVE-TM** (IP67 type)  U-WAVE fit
Caliper	Standard		 **02AZF300**	**264-621*** **U-WAVE-TC** (buzzer type)  U-WAVE fit
	Coolant-proof type		 **02AZF310**	**264-620*** **U-WAVE-TC** (IP67 type)  U-WAVE fit

* Order No. differs depending on the destination country. Add the following suffix to the order No.: K for Korea, B for Brazil and Argentina.

Mitutoyo reserves the right to change any or all aspects of any product specification, including prices, designs and service content, without notice.

A

Measurement Data Wireless Communication System

U-WAVE-T

Transmits measurement data to **U-WAVE-R**. Select IP67 or buzzer type, according to your application. **U-WAVE-R** can be connected to Digimatic gages by dedicated cable for **U-WAVE-T** (optional). It also allows the attachment of digital measuring instruments with data output port, such as the **SJ-200** Series.

Model	**U-WAVE-T** (IP67 type)	**U-WAVE-T** (Buzzer type)
Order No.*	**02AZD730G / 02AZD730H / 02AZD730J**	**02AZD880G / 02AZD880H / 02AZD880J**
Protection Rating	IP67	None
Data reception indication	LEDs	Buzzer and LEDs
Power supply	Lithium battery CR2032×1	
Battery life	Approx. 400,000 transmissions	
Dimensions (mm)	44×29.6×18.5	
Mass (g)	23	

* Order No. differs depending on the destination country.

U-WAVE-T system configuration

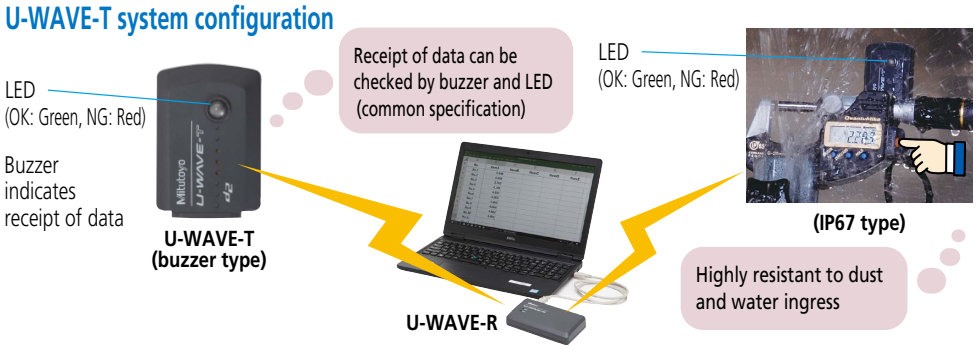

U-WAVE-T dedicated connection cable

A dedicated cable connects a Digimatic gage to **U-WAVE-T**. Check the connector (A to G and SF; refer to pages A-21 and A-22 for details) compatible with the Digimatic gage to be used and select either standard type (figure 1) or foot switch type (figure 2) according to your application.

Type	Standard connecting cable Order No.	Connecting cable for foot switch Order No.
(A) Water-proof model with output button	**02AZD790A**	**02AZE140A**
(B) Water-proof model with output button	**02AZD790B**	**02AZE140B**
(C) With data-out button	**02AZD790C**	**02AZE140C**
(D) 10-pin plain type	**02AZD790D**	**02AZE140D**
(E) 6-pin round type	**02AZD790E**	**02AZE140E**
(F) Plain type straight	**02AZD790F**	**02AZE140F**
(G) Plain type straight water-proof model	**02AZD790G**	**02AZE140G**
(SF) Straight standard type	**02AZG011**	**02AZG021**

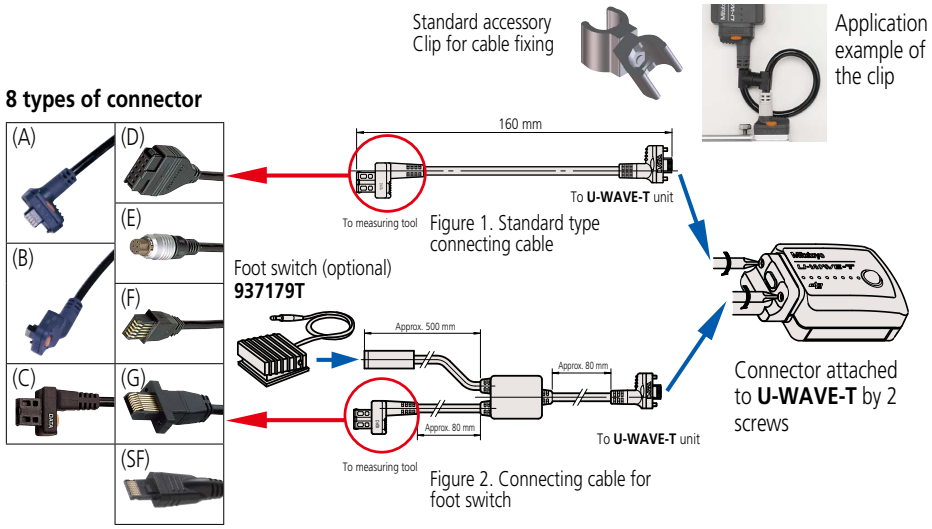

• Data format

Example of format when the Digimatic gage displays 12.34

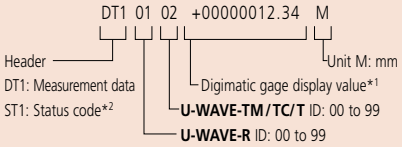

*1 Data interface function is switchable to "Measurement value only" e.g.) 12.34

*2 Example of status code format

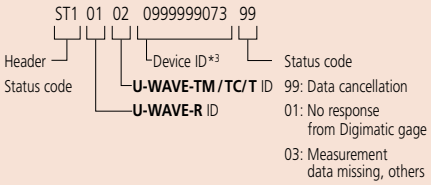

*3 Unique number assigned to **U-WAVE** at shipment

Notes on Identification of Measurement Data and Multiple Systems Operation

Following the above format, the **U-WAVE** data format starts with a 4-digit code where the first two digits represent receiver channels and the last two are transmitter channels. The large number of transmitter/receiver combinations possible with this scheme ensures that the receivers in a factory measurement system only accept data from the intended transmitters, even when several receivers are all within communication range of different transmitters using the same channel.
Different frequency bands (up to 15 available) may also be used to further ensure that there are no communication problems between adjacent **U-WAVE-R** units.

Mitutoyo reserves the right to change any or all aspects of any product specification, including prices, designs and service content, without notice.

U-WAVE-T mounting plate for QM-Height
02AZE990
Standard accessories
- Detachable fastener, 2 pcs. (mirror-imaged)
- Mounting screw: 2 pcs.

Mounting Diagram for QM-Height (02AZE990)

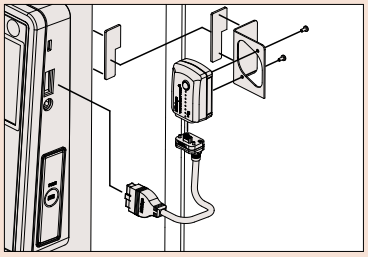

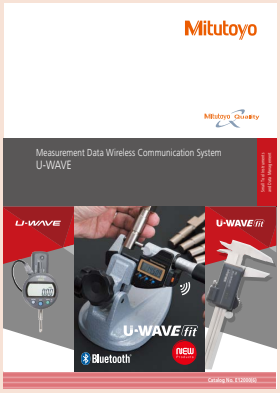

Refer to the Measurement Data Wireless Communication System **U-WAVE** Brochure (**E12000**) for more details.

Measurement Data Wireless Communication System U-WAVE

Optional Accessories for U-WAVE

U-WAVE-T mounting plate

Supports the **U-WAVE-T** on a Digimatic gage by detachable fastener. Batteries can be replaced without needing to detach the **U-WAVE-T** from the gage.



U-WAVE-T mounting plate
02AZE200
Standard accessories
- Detachable fasteners: 1 set
- Mounting screw: 2 pcs.

Mounting diagram (02AZE200)

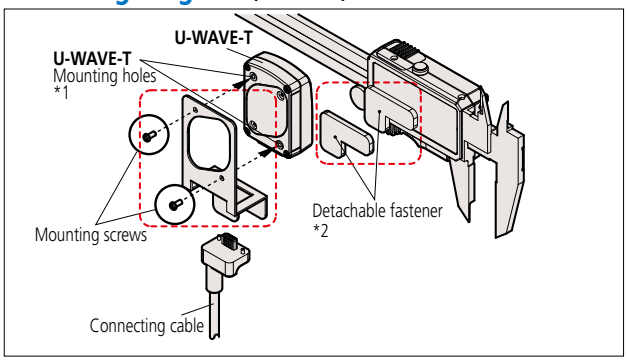

*1 To avoid damaging the threaded holes in the plastic body of the **U-WAVE-T** unit, the mounting screws should be tightened only just sufficiently to grip. Repeated removal of these screws should also be avoided for the same reason.
*2 In order to avoid loss of adhesion, do not allow oil or coolant to come into contact with the bonding surfaces of the detachable fasteners.

Typical applications of the mounting plate

QuantuMike MDE-25MX



Front view

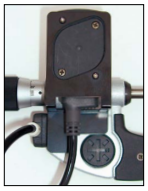

Rear view

Digimatic Indicator ID-C112XB

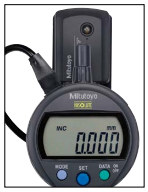

Front view



Rear view

Mitutoyo reserves the right to change any or all aspects of any product specification, including prices, designs and service content, without notice.

A

Measurement Data Collection Software
USB-ITPAK V2.1/V3.0 (IT-016U/IT-020U/USB-ITN/U-WAVE/DP-1VA LOGGER connectable)

• **USB-ITPAK V2.1/V3.0** creates a procedure to input data from gages equipped with Digimatic output to Excel sheets via **USB-ITN** or **U-WAVE**. This optional software facilitates the daily inspection work for mass-produced products.

The combined use with Input Tool or U-WAVE will improve the operational efficiency of repetition inspection work. Best suited for keeping track of inspection data of mass-produced products.

- Automatically calls Excel sheet.
- Cursor moves can be specified.
- Input range can be specified per Digimatic gage, which reduces improper input.
- The last data input can be canceled by a single operation (foot switch, function key etc.)
- Data input or cancellation can be performed at once in multiple-point simultaneous measurement.

Main features of USB-ITPAK V2.1/V3.0

• **Setting of Microsoft Excel input:**
Designation of where to input (workbook, worksheet, cell range), cursor move (right, down), and others.

• **Selection of measuring method (3 modes available)**
1) Sequential measurement 2) Simultaneous measurement 3) Individual measurement (refer to page A-17 for details).

• **Control item and instruction at data input**

Control item	Mouse operation	Function key	Foot switch + USB-FSW	Data switch when using **U-WAVE**	Data switch other than **U-WAVE**
Data output request	✓*1	✓*1	✓	✓*2	✓
Data cancel	✓*1	✓*1	✓	✓ Press and hold*2	
Data skip	✓*1	✓*1	✓		
Character input (example: OK or NG etc.)			✓ Pre-registered character strings		

*1 Not available during individual measurement.
*2 Not available during simultaneous measurement in the event driven mode.

• **Number of connectable gages**

Available devices	Maximum number of connection (total of (1), (2), and (3))	Others
1) **IT-020U/USB-ITN**	For Windows 2000/XP: Up to 100 units*3 For Windows Vista/7/8/8.1/10: Up to 20 units*3 (For **U-WAVE-R**, plus 100 per unit in terms of available gages.)	• Maximum registration (total of (1), (2), and (3)) 400 units
2) **USB-FSW**		
3) **U-WAVE-R** (Up to 100 gages connectable to each **U-WAVE-R**. **U-WAVE-T** ID: 00 to 99)		• Control/identification of connecting gage VCP (Virtual COM port) Switch from HID to VCP for (1) and (2). The VCP driver software is supplied with **USB-ITPAK**.

• **Data loading time**: when using **IT-020U/USB-ITN**, 0.2 s to 0.3 s per gage unit
U-WAVE event driven mode: 0.5 s data refresh interval

• **Timer input function** (only in simultaneous measurement)
Input interval (time): 0.1 s*4 to 24 hours at maximum

• **Measurement date/time display function** (available in sequential and simultaneous measurements)
The display format is subject to the setting of the Excel sheet.

*3 The actual number can be less depending on the system configuration.
*4 If a shorter time is set, a priority is given to the longer time compared with the actual communication time.

Optional Accessories for USB-ITPAK

USB Foot Switch Adapter USB-FSW

This USB adapter for connecting a PC is required when using the Foot Switch (**937179T**) in **USB-ITN**.
A dedicated VCP driver for this adapter is included in **USB-ITPAK**.

Main specification

• With **USB-ITPAK**, application of the foot switch can be set.
• Data control: "Data request","Data cancel", "Data skip"
• Character string input (e.g. GO/NG, etc.)
Note: **USB-FSW** is used for installation of the VCP driver.

Foot switch (**937179T**)



Order No.

Model No.	**USB-ITPAK V2.1/V3.0**
Order No.	**06AFM386/06AGR543**

Upgrading from V1.0/V2.0 is not supported.

USB-ITPAK V2.1/V3.0 USB dongle



A USB dongle must be connected to the PC running the software.

Operating environment

Compatible OS*1	**USB-ITPAK V2.1**: Windows 2000 SP4, Windows XP SP2 or later, Windows Vista, Windows 7, Windows 8, Windows 8.1, Windows 10
	USB-ITPAK V3.0: Windows 10 (64 bit only)
Supported Excel versions*2	**USB-ITPAK V2.1**: 2002, 2003, 2007, 2010, 2013, 2016 Microsoft 365
	USB-ITPAK V3.0: 2010, 2013, 2016 Microsoft 365
Hard disk	**USB-ITPAK V2.1**: Free space of more than 10 MB **USB-ITPAK V3.0**: Free space of more than 15 MB
CD-ROM drive	For program installation
USB port*3	2 ports or more
Monitor resolution	**USB-ITPAK V2.1**: 800×600, 256 colors or more **USB-ITPAK V3.0**: 1024×768, 256 colors or more

*1 32-bit, 64-bit OS supported
*2 Operation with Excel for MAC OS is not guaranteed.
*3 A commercially available hub can be used.
(USB certified product is recommended)

Language support

• Operation language (15 languages)
Japanese, English, German, French, Spanish, Italian, Czech, Swedish, Turkish, Polish, Hungarian, Russian, Korean, Chinese (traditional/simplified)
• Operation manual (PDF file)
Japanese, English, German

Order No.

Model No.	**USB-FSW**
Order No.	**06ADV384**

Foot Switch Adapter USB-FSW

Overall length: 160 mm

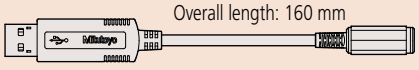

Mitutoyo reserves the right to change any or all aspects of any product specification, including prices, designs and service content, without notice.

Measurement Data Management
USB-ITPAK V2.1/V3.0 (IT-016U/IT-020U/USB-ITN/U-WAVE/DP-1VA LOGGER connectable)

Example of measurement using the U-WAVE Series wireless communication system <Data sorting of individual measurements>

Data from multiple Digimatic gages (U-WAVE-T, U-WAVE-TM/TC) sent to separate Excel sheets

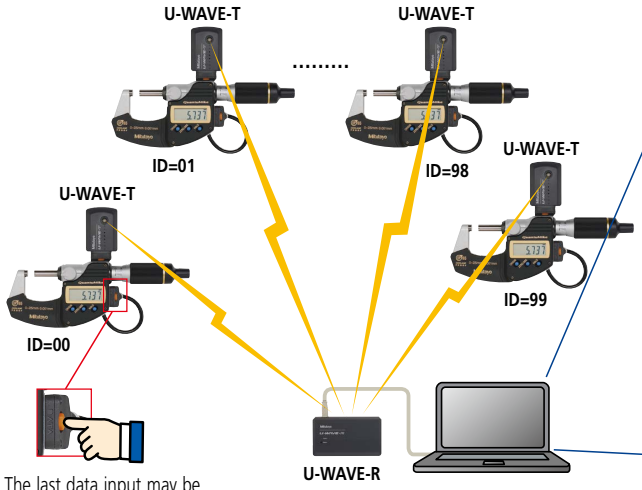

The last data input may be canceled by pressing and holding the data switch

Up to 100 gages can be handled by one **U-WAVE-R** unit

Note: **U-WAVE-TM/TC** can also applicable.

Loading data from multiple Digimatic gages (**U-WAVE-T**) into separate Excel sheets is now available without the need for macro programming.

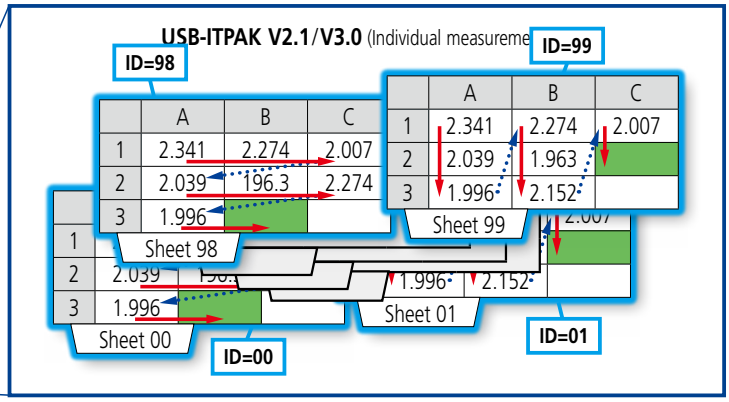

Entry point can be specified per gage (by **U-WAVE-T ID**).
- Specifying an Excel file: Excel Book (full path) +sheet name
- Specifying data input cells (example: A1: C3)
- Specifying cursor move (right or down)

Example of measurement using the U-WAVE wireless communication system — timer input + measurement date/time display during simultaneous measurement

Automatically obtains displacement data in a certain input interval

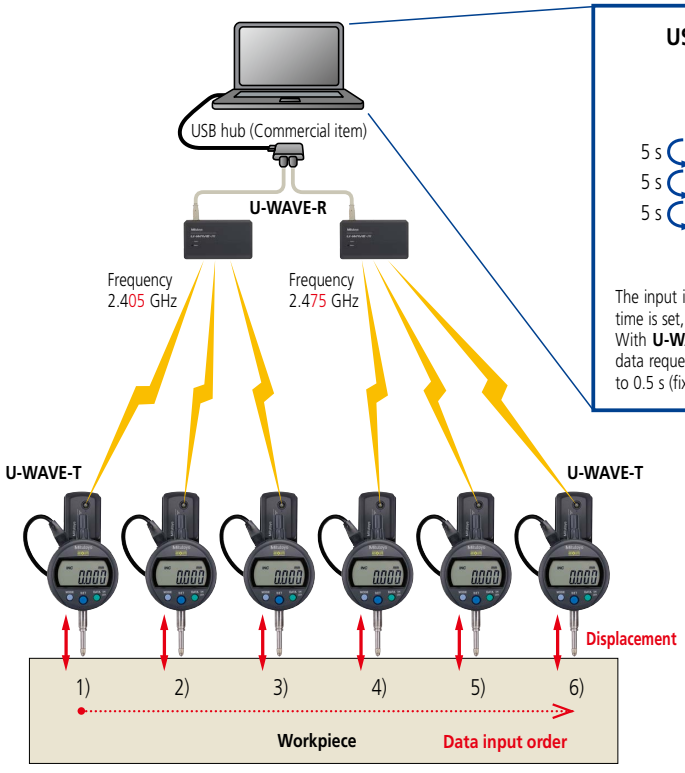

If using **USB-ITPAK V2.1/V3.0** supporting **U-WAVE** event driven, arbitrary timer input is allowed without the need for macro programming.

USB-ITPAK V2.1/V3.0 simultaneous measurement + timer input (example: 5 s interval)

	A	B	C	D	E	F	G
1	Displacement 1)	Displacement 2)	Displacement 3)	Displacement 4)	Displacement 5)	Displacement 6)	Measurement date/time
2	0.281	0.162	0.121	0.051	0.011	–0.001	2013/4/1 7 30 00
3	0.279	0.152	0.133	0.064	0.018	–0.003	2013/4/1 7 30 05
4	0.265	0.149	0.142	0.089	0.021	–0.007	2013/4/1 7 30 10
5							
6							

5 s
5 s
5 s

The input interval can be arbitrarily set by 0.1 s intervals up to 24 hours. If a smaller value than the data loading time is set, the actual measurement time will be the input interval.
With **U-WAVE**, an error (no data) may occur if less than 0.5 s is set for the input interval. This is because the data request signal is issued before the data comes in, based on the event driven data refresh interval that is set to 0.5 s (fixed).

Mitutoyo reserves the right to change any or all aspects of any product specification, including prices, designs and service content, without notice.

Mitutoyo

A

You can set up the procedure to input the measurement data to the Excel sheet in combination with USB-ITPAK V2.1/V3.0 and IT-016U/IT-020U/USB-ITN/U-WAVE

Measurement applications of USB-ITPAK V2.1/V3.0 (Three examples of how **USB-ITPAK V2.1/V3.0** can be deployed are shown below)

Sequential measurement

Measurement values are input one by one according to a procedure previously defined by using one or more Digimatic gages (via **IT-016U/IT-020U/USB-ITN** or **U-WAVE**).

(Measurement example – see figure at right)

1) Measure outside diameter at X and Y of 5 workpieces with a micrometer.

2) Measure length H of 5 workpieces.

3) Inspect external view to check if there are any scratches or color shading and input "OK" or "NG".

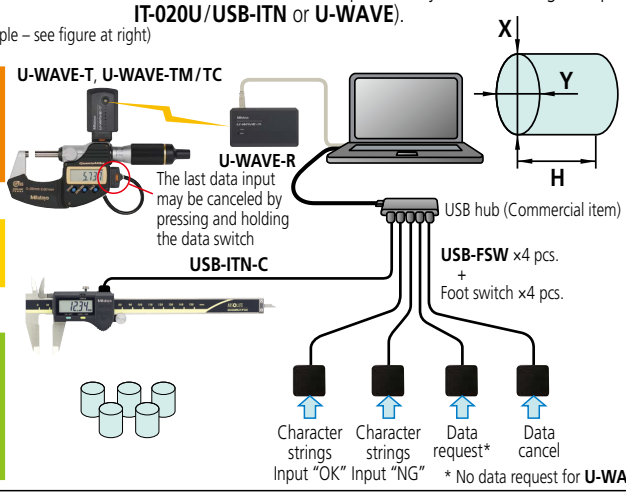

* No data request for **U-WAVE**.

When a measuring procedure is executed, a window (as below) is displayed. "Data request*", "Data cancel*", "Data skip*", "Aborting", "Complete" can be specified.
* These operations can be allocated to the function key or foot switch (via **USB-FSW**).

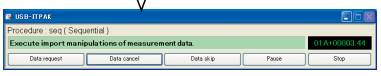

	A	B	C	D	E	F
1	Setting	1	2	3	4	5
2	Dimension X	10.025	10.033	9.964	10.031	10.046
3	Dimension Y	9.982	10.017	10.008	9.996	10.027
4	Dimension H	29.97	30.02	30.07	29.96	30.04
5	External Appearance	OK	OK	NG		

Cell movement direction after inputting data (down and right)
Carriage return (Low, column)
Microsoft Excel sheet previously specified
Input range of micrometer (B2 to F3)
Input range of caliper (B4 to F4)
Input range of visual judgment (B5 to F5)
Cell that will receive next input is highlighted in green

Simultaneous measurement

Measurement values are input simultaneously from several Digimatic gages (via **IT-016U/IT-020U/USB-ITN**, **U-WAVE**)

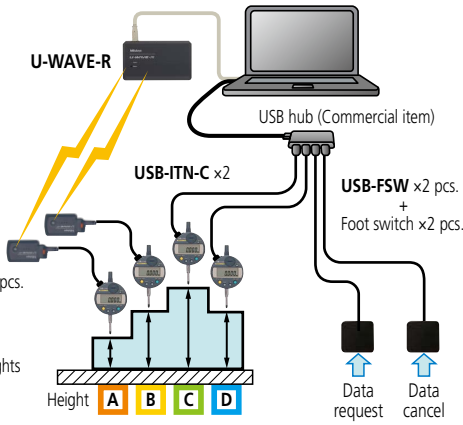

(Measurement examples)
Simultaneous measurement of the heights A to D on the workpiece below.

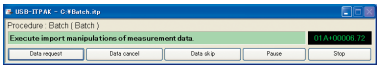

	A	B	C	D	E
1		Height A	Height B	Height C	Height D
2	1	5.02	8.03	9.96	6.03
3	2	4.98	8.02	10.01	5.99
4	3	4.97	8.04	10.07	5.96
5	4				
6	5				

First measurement (finished)
Second measurement (finished)
Third measurement (finished)
Fourth measurement (Wait for next input)

Individual measurement

Several operators input measurement data asynchronously according to individually defined procedures (where to input, move direction, etc.) from each Digimatic gage via **IT-016U/IT-020U/USB-ITN** or **U-WAVE**.

(Measurement example)
Two operators measure 6 workpieces (three each, both working at the same time)

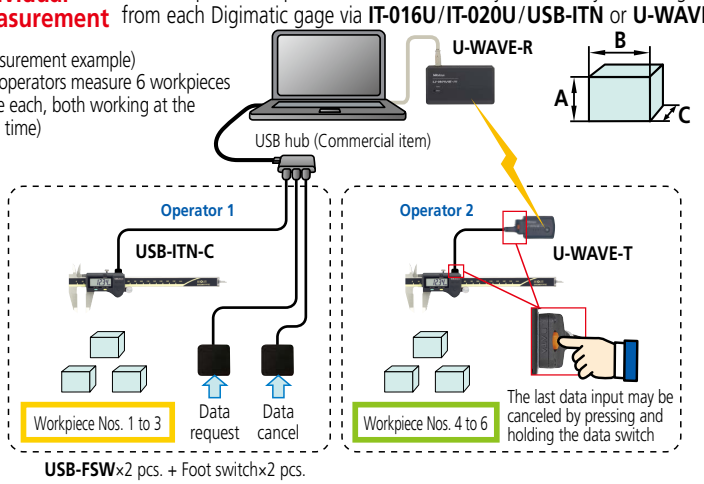

USB-FSW×2 pcs. + Foot switch×2 pcs.

Since several individual operators perform measurement simultaneously, an operation key and a function key in the window below cannot be used at the same time. The only effective input device in this case is the foot switch (via **USB-FSW**).



	A	B	C	D	E	F	G
1	Setting	1	2	3	4	5	6
2	Dimension A	10.02	10.03	9.96	10.15	10.23	10.04
3	Dimension B	9.98	10.01	10.07	9.99	9.78	
4	Dimension C	10.15	10.14		9.96	10.27	

Operator 1 — Cell that will receive next input
Operator 2 — Cell that will receive next input

Notes on using USB-ITPAK V2.1/V3.0:
Do not merge the cells in the specified range as a measurement data input.
During measurement, the Microsoft Excel worksheet cannot be modified in any way apart from entering data. If you need to modify the sheet, it is necessary to abort or finish the measurement.
Mitutoyo *Bluetooth*® U-WAVE and U-WAVE ZigBee cannot be used together.

Mitutoyo reserves the right to change any or all aspects of any product specification, including prices, designs and service content, without notice.

Data Conversion Program into Inspection Certificates in Excel Format MeasureReport

- Data from a measurement result file generated with a CMM, vision measuring machine or other machine can be output to an inspection table generated with Excel. Data from multiple measuring machines can be combined into a single inspection table (up to 200 measurement items).
- A customized format can be created for an inspection sheet using simple editing (copy & paste, etc.) by using a sample format as the template.
- The computation function is available for tolerance judgment, workpiece judgment, statistical calculation and other types of processing at inspection-table generation time.

Create inspection table from measurement result file for each measuring machine (PC data processing)

CMM
MCOSMOS, MICROPAK2700
MICROPAK700



Measurement result file

Vision Measuring Systems
QVPAK, QSPAK
QIPAK



Measurement result file

Optical Instruments
Vision Unit
QSPAK



Measurement result file

Measurement result file conversion

Select and extract data, design value, tolerance value, etc., and output in specified Excel format.

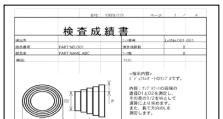

Example of inspection table.

Excel inspection table creation macro program

- Measurement result file, data loaded from on-line communication, or data specified from database file of MeasurLink® can be output to an Excel table.
- Original format can be created by simple editing with sample style as a template. Desired template style can be automatically created by specifying required number of items and workpieces.
- Tolerance judgment (✱ marked in NG data), workpiece judgment (OK or NG is indicated in judgment column), statistical analysis, page break are automatically processed.
- Data from several measuring machines can be combined in one inspection table.

Main specifications of MeasureReport

- Document creation:
  Automatic creation of template sample style (Number of items × number of workpieces specified)
- GO/±NG Judgment:
  Tolerance judgment (marked in NG value)
  Workpiece judgment (OK or NG in judgment column)
- Statistical analysis: mean, maximum, minimum, range, standard deviation, Cp, Cpk, fraction defective, number of defectives, etc. 15 items in total.
- Capacity:
  1) Measurement result file conversion
  2) On-line data input
  Max. 200 items × Max. 2,000 workpieces
  3) MeasurLink® database import
  Max. 200 items × Max. 2,000 workpieces or
  Max. 2,000 items × Max. 200 workpieces
- File combined:
  A maximum of 10 measurement files can be specified and both measurement items and workpieces can be combined respectively.
- Printing and saving of inspection table:
  Automatic printing and saving in Excel format
- Comment output to the inspection table:
  30 items including part number and lot number can be input.
- Workpiece drawing output to the inspection table:
  Image files (bmp, jpg) can be displayed in arbitrary positions.
- Others:
  Decimal point digit justification, error display, automatic page break
- File conversion: Supported file formats

<CMM>
1) **MCOSMOS** ASCII file (**Geopak-3**)
2) **MPK2700** statistic file (Binary format)
3) **MPK2700** ASCII file (Text format)

<Vision Measuring Systems>
1) QUICK VISION **QVPAK-QV Report**
2) QUICK SCOPE **QSPAK** measurement result file
3) QUICK IMAGE **QIPAK** measurement result file

<Optical Instruments>
1) Vision Unit **QSPAK** measurement result file

Measure Report operation environment (recommended)

- OS: Windows 2000
  Windows XP
  Windows Vista (32-bit)
  Windows 7 (32-bit/64-bit)
  Windows 10 (64-bit)
- Microsoft Excel: 2000/2002/2003/2007/2010/2013/2016/2019

(Only 32-bit edition is available regardless of Windows version. It doesn't work on 64-bit Windows.)

- CPU: Processor of 1 GHz or more
- Memory: 2 GB or more
- Hard disk: 3 GB or more free space
- Display: 1024×768 or larger
- Drive: CD-ROM or DVD drive (required for installation)

Mitutoyo reserves the right to change any or all aspects of any product specification, including prices, designs and service content, without notice.

A

Mini-Printer Equipped with Data Logging Function
SERIES 264 — Digimatic Mini-Processor DP-1VA LOGGER

In addition to the conventional (DP-1VR) printing and statistical calculation functions, data logger and USB output functions are added and enhanced.

- This is a palm-sized printer used to print measurement data from Digimatic gages or to perform statistical analysis.
- The versatile **DP-1VA LOGGER** printer not only prints measurement data, but performs a variety of statistical analyses, draws histograms and D-charts and also performs complex operations on Xbar-R control charts.
- The data logger function allows storage of up to 1,000 pieces of data in memory, and batch transfer of stored data to an Excel-format inspection certificate, etc., by connecting to a PC with a USB cable (optional).



Example of printout

MODE1

Various statistical calculations are executed using all input data. If the tolerance limits have been set, GO/±NG judgment and histogram creation are also enabled.

```
*LIMIT DATA  1*
LSL          19.11   mm
USL          21.00   mm
TOL           1.89   mm

     1       20.14   mm
     2       20.16   mm
     3       19.68   mm
     4       19.77   mm
     5       20.27   mm
     6       20.28   mm
     7       19.31   mm
     8       19.84   mm
     9       19.93   mm
    10       19.30   mm
    11       19.56   mm
▼   29       18.98   mm
    30       20.82   mm

PART NO.:
DATE 2018/ 2/15
TIME 12: 6

NAME:

* RESULT *
N                30
MAX          21.06   mm
MIN          18.99   mm
R             2.07   mm
X̄           19.9550  mm
σn            0.4501  mm
σn-1          0.4578  mm

-NG              1
+NG              1
P              6.667   %
Cp             0.688
Cpk            0.615

 * HISTOGRAM *
LSL          19.11   mm
USL          21.00   mm
TOL           1.89   mm

 DIV         10
-NG   1 |0
LSL    |0
A      |0
B      |2 ■■
C      |9 ■■■■
D      |5 ■■■■■
E      |6 ■■■■■■
F      |5 ■■■■■
G      |3 ■■■
H      |2 ■■
I      |1 ■
J      |1 ■
USL    |0
+NG   1 |0

□=    1

A    19.1100 mm ~
B    19.2990 mm ~
C    19.4880 mm ~
D    19.6770 mm ~
E    19.8660 mm ~
F    20.0550 mm ~
G    20.2440 mm ~
H    20.4330 mm ~
I    20.6220 mm ~
J    20.8110 mm ~
     21.0000 mm ~
```

MODE2

In addition to the MODE1 function, measurements within the tolerance limits are printed out as a D chart*. This chart allows you to identify the trend of variations in measurement data.
* D chart stands for Displacement chart.

```
*LIMIT MODE*
*LIMIT DATA  1*
*NO LIMIT DATA*
LIMIT1       27.22   mm

LIMIT2       28.27   mm


*NEW LIMIT DATA*
*LIMIT DATA  1*
DATE 2018/ 2/17
TIME 14:37

LSL          27.22   mm
USL          28.27   mm
TOL           1.05   mm

                 L   C   U
28.08mm          |   |   |
27.87mm          |   '   |
28.14mm          |   |   |
28.01mm          |   '   |
27.72mm          |   |   |
27.41mm          '   |   |
26.97mm◄         |   |   |
27.12mm◄         |   |   |
27.72mm          |   |   |
27.58mm          '   |   |
10
27.82mm          |   |   |
28.14mm          |   '   |
28.22mm          |   |   |
28.45mm          |   |   ►
28.45mm          |   |   ►
28.00mm          |   '   |


PART NO.:
DATE 2018/ 2/17
TIME 14:38

NAME:

* RESULT *
N                16
MAX          28.45   mm
MIN          26.97   mm
R             1.48   mm
X̄           27.8563  mm
σn            0.4134  mm
σn-1          0.4270  mm
```

MODE3

Only input of data automatically enables calculation processing of complex control limit values as well as calculation for creating an Xbar-R control chart.

```
SUB GR. NO.      1
      1       25.33   mm
      2       28.77   mm
      3       28.82   mm
      4       25.70   mm
      5       27.41   mm
      6       23.84   mm
      7       26.57   mm

X̄           26.3486  mm
R             4.98   mm
PART NO.:
DATE 2018/ 2/17
TIME 14:40

NAME:

SUB GR. NO.      2
      1       27.77   mm
      2       27.13   mm
      3       27.98   mm
      4       27.64   mm
      5       27.90   mm
      6       26.66   mm
      7       28.85   mm

X̄           27.7329  mm
R             1.99   mm
PART NO.:
DATE 2018/ 2/17
TIME 14:40

NAME:

*CONTROL LIMIT*
DATE 2018/ 2/17
TIME 14:40
NO.OF SUB GR.    2
SAMPLE SIZE      7

X̄           27.0407  mm
X̄-UCL        28.5009  mm
X̄-LCL        25.5805  mm
R̄             3.4850  mm
R-UCL         6.7051  mm
R-LCL         0.2649  mm
```

Example of batch printing log data

In OUTLOG Setting 1

```
 * OUT LOG START *
 * LOG =   10

DATE 2018/ 2/15

10:16:32          37.20 mm
10:16:44 ▲        38.84 mm
10:16:59          37.22 mm
10:17: 8          37.27 mm
10:17:56 ▼        36.96 mm
10:18:41          37.86 mm
10:19:16          37.70 mm
10:19:47 ▲        37.90 mm
10:20:17          37.29 mm
10:20:43          37.04 mm

 * OUT LOG END *
```

This setting allows printout of measurement time, measurement value, and GO/±NG judgment result.

In OUTLOG Setting 2

```
 * OUT LOG START *
 * LOG =   10

DATE 2018/ 2/15

 1          20.41   mm
 2 ▼        20.37   mm
 3          22.05   mm
 4 ▲        22.31   mm
 5 ▲        22.19   mm
 6          20.66   mm
 7 ▼        20.13   mm
 8          21.29   mm
 9          21.58   mm
10          22.03   mm
```

This setting allows printout of data number, measurement value, and GO/±NG judgment result.

In OUTLOG Setting 3

```
 * OUT LOG START *
 * LOG =   10

 1 2018/ 2/15 10:28:28
          21.00 mm
 2 2018/ 2/15 10:28:31
          20.10 mm
 3 2018/ 2/15 10:28:33
          19.60 mm
 4 2018/ 2/15 10:28:37
▼         19.03 mm
 5 2018/ 2/15 10:29:29
          20.55 mm
```

This setting allows printout of data number, measurement date and time, and GO/±NG judgment result.

Statistical calculation data

MODE0

GO/±NG judgment

MODE1, 2

N: Number of pieces of data
MAX: Maximum value
MIN: Minimum value
R: Range
$\bar{X}$: Mean value
σn: Standard deviation of a population (N)
σn-1: Sample standard deviation (N-1)
–NG: For the number of pieces of data smaller than the lower limit
+NG: For the number of pieces of data larger than the upper limit
P: Percentage of rejects
Cp: Maximum process capability potential
Cpk: Actual process capability achieved

MODE3

N: Number of pieces of data
MAX: Maximum value
MIN: Minimum value
n: Number of subgroups (up to 10)
$\bar{X}$: Mean value in a subgroup
R: Range of a subgroup
$\bar{R}$: Mean value
$\bar{X}$-UCL: Upper control limit
$\bar{X}$-LCL: Lower control limit
$\bar{R}$: Center (R control)
R-UCL: Upper control limit (R control)
R-LCL: Lower control limit (R control)

Specifications

- **264-505**
- Model: **DP-1VA LOGGER**
- Data input: Digimatic input, RS-232C input (specific to Mitutoyo **KA** counter)
- Data processing capacity:
  Mode 0: 100,000 pcs. of data
  Modes 1,2: 9,999 pcs. of data
  Mode 3: Sample size
  10×9,999 subgroups=99,990 pcs. of data
- GO/±NG judgment (five sets can be defined)
- Output: 1) USB output
  2) RS-232C data output at TTL levels
  3) GO/±NG judgment result output (+NG, GO, –NG)
- Input timer: Input intervals
  0.25 s, 1 s, 5 s, 30 s, 1 min, 30 min, 60 min
- Printing method: Thermal line printer
- Printing speed: 0.8 s per line (6.5 mm/s) (using AC adapter)
- Printing line: 10,000 lines of normal characters per roll
  7,000 lines of large characters per roll
- Printing paper: High durability thermo-sensitive paper
  Width 58 mm × length 48 m
  Note: If it is to be used for official documents, or stored more than 5 years, it is recommended to make a more durable copy.
- Power supply: 2 power methods
  1) AC adapter 100 to 240 V 50/60 Hz AC adapter (6 V, 2 A) as a standard accessory.
  2) 4 pcs. of LR6/AA size (alkaline or Ni-Mh)
  Note: Manganese dioxide batteries are not usable.
- Battery life: About 10,000 lines* (if data is printed once every 5 seconds using 1,600 mA NiMH batteries at 20 ℃)
  * This is a typical value and is not guaranteed.
- External dimensions: 94 (W) ×201 (D) ×75.2 (H) mm
- Mass: 390 g (main unit)

Optional Accessories

1) USB cable (A-microB) : **06AFZ050** (1 m)
2) RS-232C output cable: **09EAA084** (1 m, D-SUB 9-pin)
3) RS-232C counter cable: **09EAA094**
   Cable for **KA** counter (1 m, D-SUB 25-pin)
4) GO/±NG judgment cable: **965516**
   (2 m, 10 pin terminal/separate)
5) Foot switch: **937179T**

Consumable Items

Printing paper (10 rolls): **09EAA082**



Refer to the **DP-1VA LOGGER** Brochure (**E12041**) for more details.

Mitutoyo reserves the right to change any or all aspects of any product specification, including prices, designs and service content, without notice.

Digimatic/RS-232C Interface Unit Multiplexer MUX-10F

- Multiplexer **MUX-10F** is a measurement data transfer device that converts incoming Digimatic output measurement data to RS-232C and outputs it to other devices such as a PC and sequencer.
- Up to four measuring instruments with Digimatic output can be connected.



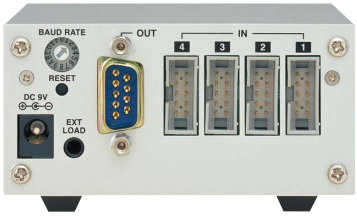

264-002
MUX-10F

Specifications

- **264-002**
- Model: **MUX-10F**
- Data input port: 4 channels for Digimatic gages
- Output: (RS-232C)
  Data output Via RS-232C interface:
  Data transmission method: Half-duplex
  Data transmission code: ASCII/JIS
  Data length: 8 bits
  Parity check: None
  Stop bit: 1
  Data transmission speed: 300/600/1200/2400/9600/19200 bps
- Connector specification:

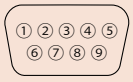

Pin No.	Signal	Function	in/out
1	CD		out
2	RD	Received data	out
3	TD	Communication data	in
4			
5	GND	Ground	
6	DR		out
7			
8	CS		out
9			

Note: For connection with a PC, use a commercially available RS-232C straight cable.

- Data format
  1) When data output

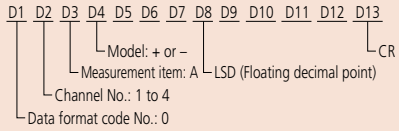

  2) Example of format

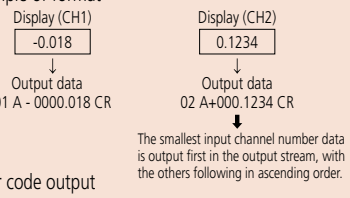

  3) Error code output

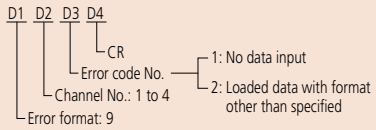

- Power supply: AC adapter (9 V, 500 mA)
- External dimensions: 91.4 (W) ×92.5 (D) ×50.4 (H) mm

Note 1: Communication software is not included.
Note 2: Separately purchase the cables. Refer to pages A-21 and A-22 for cable types.

Typical Application

Data input using the data button on the Digimatic gage

- If the Digimatic gage has a data button, data is sent to the **MUX-10F** from the gage, converted to RS-232C and sent out.

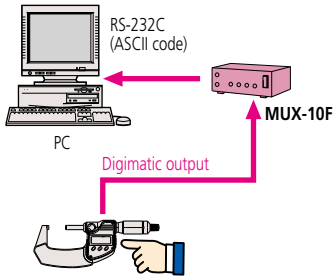

Press the data button on the measuring gage.

Data input using the load switch

- If the Digimatic gage does not have a data button, or when simultaneous measurements are performed, the **MUX-10F** load switch is used to poll data from the measuring gage (s)selected by the tool selection switch (es), converted to RS-232C, and sent out.
- If multiple measuring gages are selected by the tool selection switch, data is input in the order of channels 1 through 4.
- Optional foot switch (**937179T**) is available for quick data entry.

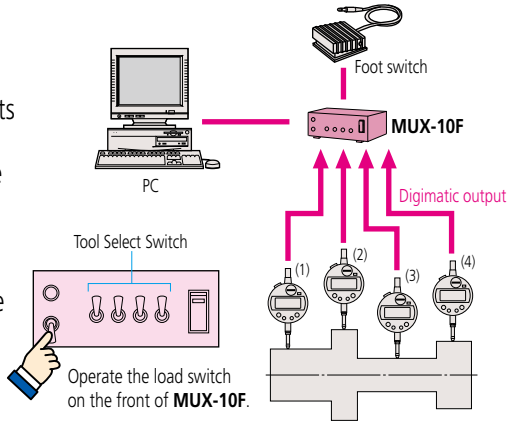

Operate the load switch on the front of **MUX-10F**.

Data input using the external commands

- Data from a specified measuring gage connected to **MUX-10F** can be polled (ch 1 to 4) by inputting a command from the PC.

Commands (ASCII)	Transfer channels
1 (ASCII code31) CR	1
2 (ASCII code32) CR	2
3 (ASCII code33) CR	3
4 (ASCII code34) CR	4
*A (ASCII code41) CR	1, 2, 3, 4
*B (ASCII code42) CR	1, 2, 4
*C (ASCII code43) CR	1, 3, 4
*D (ASCII code44) CR	2, 3, 4
E (ASCII code45) CR	1, 2, 3
F (ASCII code46) CR	1, 2
G (ASCII code47) CR	1, 3
H (ASCII code48) CR	1, 4
I (ASCII code49) CR	2, 3
J (ASCII code50) CR	2, 4
K (ASCII code51) CR	3, 4

* Command will operate the same as previous **MUX-10** when 4-channel mode is turned off.

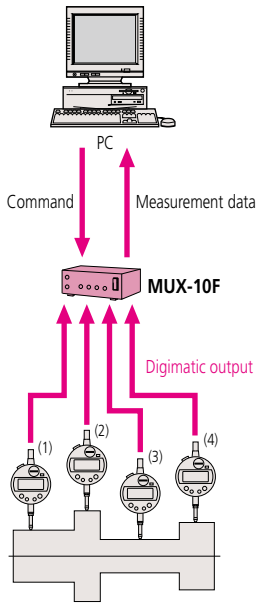

Mitutoyo reserves the right to change any or all aspects of any product specification, including prices, designs and service content, without notice.

A

Digimatic Data Cable Selector (including USB Input Tool Direct)

1) USB Input Tool Direct USB-ITN 	Connector type	**A)** Water-proof type with output button	**B)** Water-proof type with output button	**C)** Straight type with output button	**CR)** L type with output switch (cable outlet is right)	**D)** Flat 10-pin type
	Model No. Order No.	**USB-ITN-A 06AFM380A**	**USB-ITN-B 06AFM380B**	**USB-ITN-C 06AFM380C**	No applicable models **USB-ITN-C** is available Refer to the following figure.	**USB-ITN-D 06AFM380D**
2) IT-020U/IT-007R/DP-1VA LOGGER/ MUX-10F/EC Counter  Connector (12 types, A to G and SF) Type D on the other end for all models	Connector type	**A)** Water-proof type with output button	**B)** Water-proof type with output button	**C)** Straight type with output button	**CR)** L type with output switch (cable outlet is right)	**D)** Flat 10-pin type
	Order No. 1 m	**05CZA624**	**05CZA662**	**959149**	**04AZB512**	**936937**
	Order No. 2 m	**05CZA625**	**05CZA663**	**959150**	**04AZB513**	**965014**
3) U-WAVE-T 	Connector type	**A)** Water-proof type with output button	**B)** Water-proof type with output button	**C)** Straight type with output button	**CR)** L type with output switch (cable outlet is right)	**D)** Flat 10-pin type
	Standard	**02AZD790A**	**02AZD790B**	**02AZD790C**	No applicable models Type C connectors are available, but take care of the cable when using thimbles Refer to the following figure.	**02AZD790D**
	For foot switch	**02AZE140A**	**02AZE140B**	**02AZE140C**		**02AZE140D**

Select a cable (A to G and SF) whose gage connector fits the Digimatic port on your gage (check the red dotted frame in the above pictures).

Gage connectors on data cable The connector dimensions are given on page A-23.	Connector type	**A)** Water-proof type with output button	**B)** Water-proof type with output button	**C)** Straight type with output button	**CR)** L type with output switch (cable outlet is right)	**D)** Flat 10-pin type
	Picture of gage connector					
	Data switch	Available	Available	Available	Available	N/A
Digimatic ports on gage Please note that some high-precision Digimatic gages are capable of displaying the measurement result to more than 6 digits. However, according to the Digimatic output specification, the result may be output in 6 digits only. Digimatic gages whose display may exceed 6 digits • Laser Scan Micrometers • Litematic • Linear gage counter (**EH**)	Picture of Digimatic port					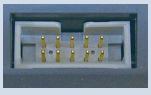
	Applicable models	• Digimatic caliper **500-776 / 500-777**, etc. **500-712-20 / 500-713-20**, etc. **500-712** etc. **550-301-10 / 550-331-10**, etc. **551-301-10 / 551-331-10**, etc. **552-302-10 / 552-303-10**, etc. **552-150-10 / 552-151-10**, etc. **552-155-10 / 552-156-10**, etc. **552-181-10 / 552-182-10**, etc. • Digimatic special application caliper **573-601 / 573-602**, etc. • Digimatic depth gage **571-251-10 / 571-252-10**, etc. • Digimatic scale unit **572-600, 572-601**, etc.	• Digimatic micrometer **293-140-30 / 293-141-30**, etc. **293-230-30** etc. **340-251-30 / 340-252-30 293-666-20 / 293-667-20**, etc. **227-201-20 / 227-203-20**, etc. **227-205-20 / 227-206-20**, etc. **227-221-20** etc. **227-223-20** etc. • Dedicated micrometers for Digimatic **422-230-30 / 422-231-30**, etc. **406-250-30 / 406-251-30**, etc. **343-250-30 / 343-251-30**, etc. **369-250-30 / 369-251-30**, etc. **345-250-30 / 345-251-30**, etc. **314-251-30 / 314-252-30**, etc. • Digimatic micrometer head **350-251-30 / 350-261-30**, etc. • Digimatic holtest **468-161 / 468-162**, etc. • Digimatic depth gage **329-250-30 / 329-251-30**, etc.	• Digimatic caliper **500-150-30 / 500-151-30**, etc. **500-500-10 / 500-501-10**, etc. **500-443** etc. • Digimatic special application caliper **573-118-10 / 573-119-10**. etc. **573-116-10 / 573-117-10**, etc. **573-191-30 / 573-291-30 573-181-30 / 573-182-30**, etc. • Digimatic depth gage **571-201-30 / 571-202-30**, etc. • Digimatic micrometer head **164-163 / 164-164** • Digimatic scale unit **572-203-10 / 572-213-10 572-300-10 / 572-301-10**, etc.	• Digimatic micrometer **293-582 / 293-583**, etc. **389-514 / 389-714** 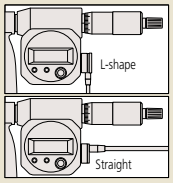 Type C straight connectors are available, but may interfere with thimble operation.	• Digimatic indicator **ID-H ID-F** (Note1) • High-precision height gage **QM-Height** • Mu-checker **Digital Mu-checker** (using a foot switch) • Laser scan micrometer **LSM-9506** • Linear gage counter **EF / EH** (Note 2) **EB** (Note 1), **EC-101D** (Note 1) • Litematic **VL-50-B / 50S-B** (Note 2) • Contour measuring system **SJ-210 / 310 / 410 SJ-500 / SV-2100** (Note 2) • Hardness testing machines **HM-210 / 220 HV-110 / 120 HR-530 HR-600**

Mitutoyo reserves the right to change any or all aspects of any product specification, including prices, designs and service content, without notice.

E) Round 6-pin type	F) Flat straight type	FB) Flat L-shape (cable outlet is back)	FR) Flat L-shape (cable outlet is right)	FL) Flat L-shape (cable outlet is left)	G) Flat straight water-proof type	SF) Straight standard type
USB-ITN-E 06AFM380E	**USB-ITN-F 06AFM380F**	No applicable models **USB-ITN-F** is available.			**USB-ITN-G 06AFM380G**	**USB-ITN-SF 06AGQ001F**

E) Round 6-pin type	F) Flat straight type	FB) Flat L-shape (cable outlet is back)	FR) Flat L-shape (cable outlet is right)	FL) Flat L-shape (cable outlet is left)	G) Flat straight water-proof type	SF) Straight standard type
937387	**905338**	**905689**	**905691**	**905693**	**21EAA194**	**06AGL011**
965013	**905409**	**905690**	**905692**	**905694**	**21EAA190**	**06AGL021**

E) Round 6-pin type	F) Flat straight type	FB) Flat L-shape (cable outlet is back)	FR) Flat L-shape (cable outlet is right)	FL) Flat L-shape (cable outlet is left)	G) Flat straight water-proof type	SF) Straight standard type
02AZD790E	**02AZD790F**	No applicable models Use **02AZD790F** or **02AZD140F**.			**02AZD790G**	**02AZG011**
02AZE140E	**02AZE140F**				**02AZE140G**	**02AZG021**

Note 1: **ID-F**, **EB**, **EC-101D**, **ID-U**, **ID-SS**, **ID-SX** are required to use with the **USB-ITN**.
Note 2: **USB-ITN**, **IT-020U**, and **U-WAVE** cannot be used with **EF/EH**, **VL-50-B/50S-B**, and **SJ-500/SV-2100**.

E) Round 6-pin type	F) Flat straight type	FB) Flat L-shape (cable outlet is back)	FR) Flat L-shape (cable outlet is right)	FL) Flat L-shape (cable outlet is left)	G) Flat straight water-proof type	SF) Straight standard type
			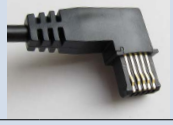			
N/A	N/A	N/A	N/A	N/A	N/A	N/A
		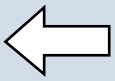	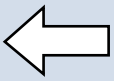	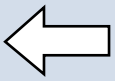		
• Hardness testing machines **HM-102** **HM-103** **HM-320** **HM-430** **HM-411**	• Digimatic indicator **ID-CX**, **ID-C** (**Peak-Value Hold Type**), **ID-C** (**Calculation type**), **ID-C** (**Bore Gage Type**), **ID-U** (Note 1), **ID-SS** (Note 1), **ID-SX** (Note 1) • Digimatic height gage **192-663-10/192-613-10/570-322/570-227** • ABS borematic **568-361/568-362**, etc. • Digimatic bore gage **511-501/511-502**, etc. • Scale unit **572-460/572-560/572-480-10/572-580-10**, etc. • Hardness testing machines **HH-300** • Digimatic depth gage **Digimatic type** (**ID-CX**)				• Digimatic indicator **ID-N** **ID-B**	• Digimatic indicator **ID-CNX** **ID-FNX**

Digimatic data cable specifications (Dimensions)

Gage connector dimensions (Unit: mm)

A

A) 1) **06AFM380A** 2) **05CZA624** (1 m) **05CZA625** (2 m) 3) **02AZD790A** (Standard) **02AZE140A** (FSW)

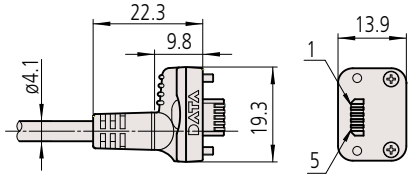

B) 1) **06AFM380B** 2) **05CZA662** (1 m) **05CZA663** (2 m) 3) **02AZD790B** (Standard) **02AZE140B** (FSW)

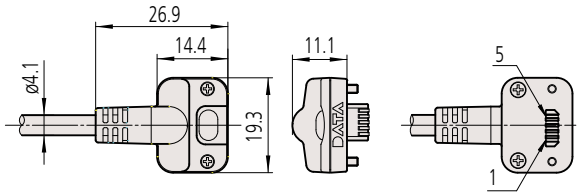

C) 1) **06AFM380C** 2) **959149** (1 m) **959150** (2 m) 3) **02AZD790C** (Standard) **02AZE140C** (FSW)

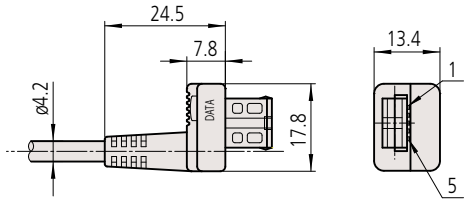

CR) 1) No applicable models 2) **04AZB512** (1 m) **04AZB513** (2 m) 3) No applicable models

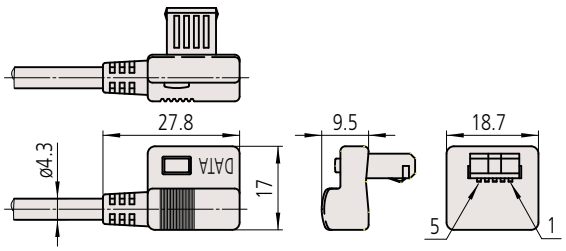

D) 1) **06AFM380D** 2) **936937** (1 m) **965014** (2 m) 3) **02AZD790D** (Standard) **02AZE140D** (FSW)

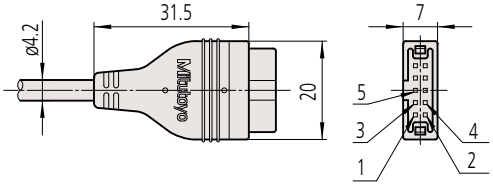

E) 1) **06AFM380E** 2) **937387** (1 m) **965013** (2 m) 3) **02AZD790E** (Standard) **02AZE140E** (FSW)

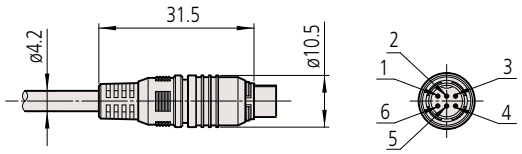

F) 1) **06AFM380F** 2) **905338** (1 m) **905409** (2 m) 3) **02AZD790F** (Standard) **02AZE140F** (FSW)

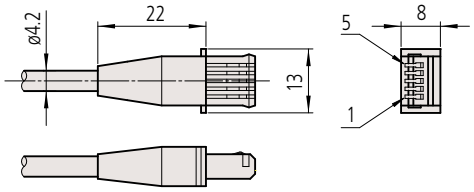

FB) 1) No applicable models 2) **905689** (1 m) **905690** (2 m) 3) No applicable models

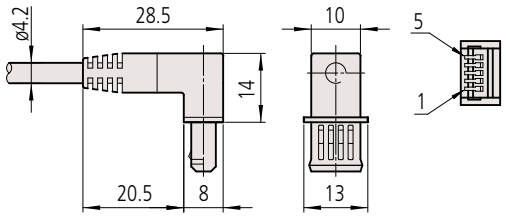

FR) 1) No applicable models 2) **905691** (1 m) **905692** (2 m) 3) No applicable models

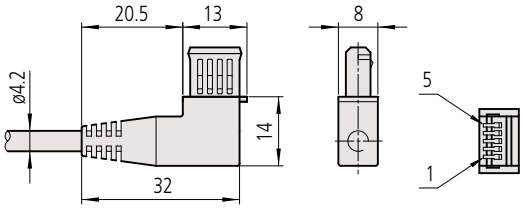

FL) and FR) is symmetrical and the same size.

G) 1) **06AFM380G** 2) **21EAA194** (1 m) **21EAA190** (2 m) 3) **02AZD790G** (Standard) **02AZE140G** (FSW)

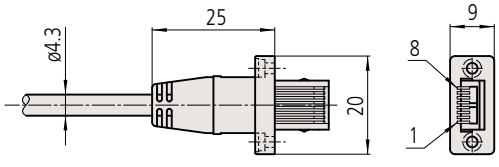

Mitutoyo reserves the right to change any or all aspects of any product specification, including prices, designs and service content, without notice.

Gage connector dimensions (Unit: mm)

SF) 1) **06AGQ001F** 2) **06AGL011** (1 m) **06AGL021** (2 m) 3) **02AZG011** (Standard) **02AZG021** (FSW)

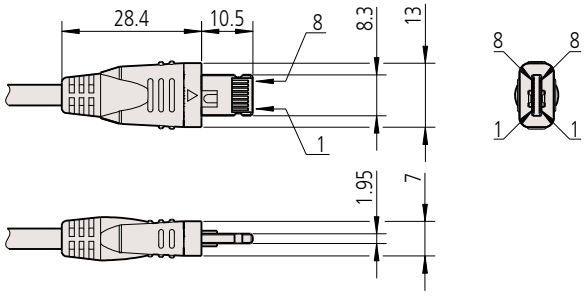

MiCAT
Mitutoyo Intelligent Computer Aided Technology
the standard in world metrology software
MeasurLink

A

Measurement Data Network System MeasurLink®

- **MeasurLink®** is a data management modular software system that enables collecting data from a wide range of Mitutoyo measuring tools and systems including Coordinate Measuring Machines.
  It supports the "visualization of quality" by showing quality information important for judging the status of processes, such as control charts and process capability indexes, in an easy-to-understand way.

Note: MeasurLink® is a registered trademark of Mitutoyo Corporation in Japan and Mitutoyo America Corporation in the United States.

Is the inspection record data utilized to solve quality-related problems?

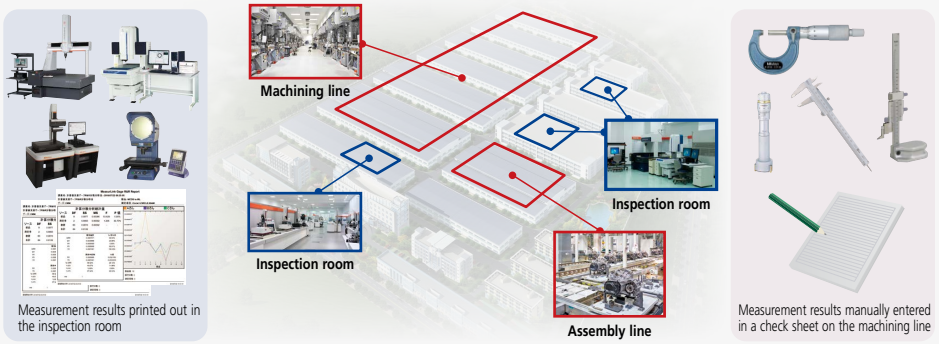

Hard to identify problems with only numerical data

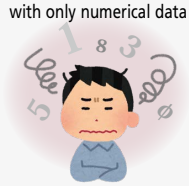

Current problem

- Data scattered in various locations in the plant
- Numerical data not effectively utilized
- Lack of knowledge about statistical calculations
- Management using spreadsheet software
- Problems need to be tackled by the on-site person in charge

Hard to respond quickly since it takes time to enter and analyze data. Unsure about reliability of analysis.



Isn't there any quicker, simpler and more reliable management method?

SPC management can be easily done by combining Mitutoyo measuring instruments and MeasurLink®.

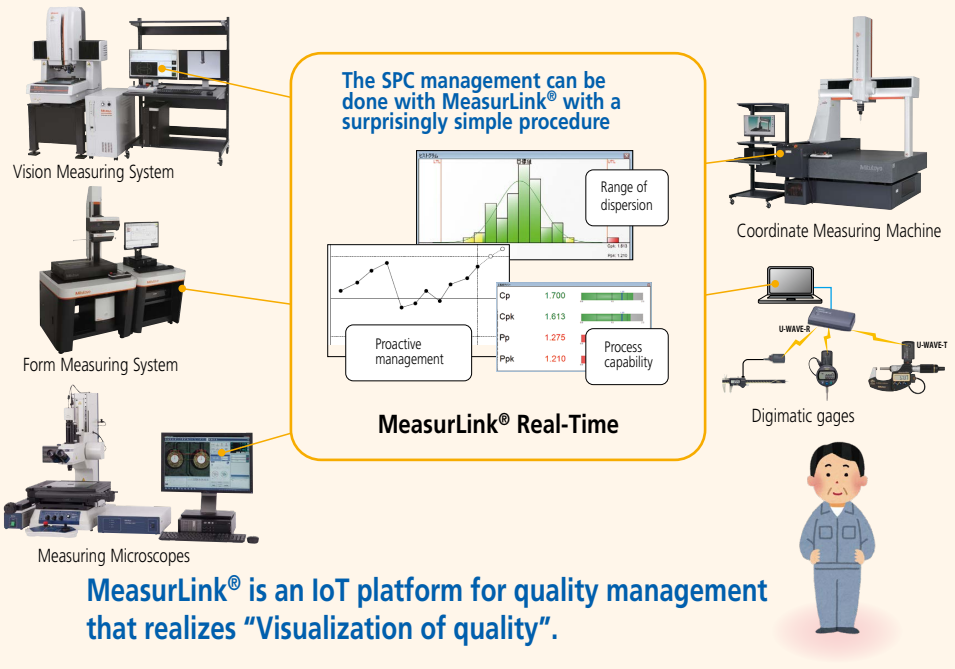

MeasurLink® is an IoT platform for quality management that realizes "Visualization of quality".



Refer to the **MeasurLink®** Brochure (**E12028**) for more details.

Mitutoyo reserves the right to change any or all aspects of any product specification, including prices, designs and service content, without notice.

- **Centralized monitoring from all MeasurLink® data collection terminals networked together on the shop floor**
  Enables easy networking through the Database Server (SQL Server). It comprises the six software packages shown in the figure below, and allows for choosing/combining functions necessary for the purpose, such as "data collection" in the inspection room or on the shop floor, or "process monitoring/analysis" by the manager.

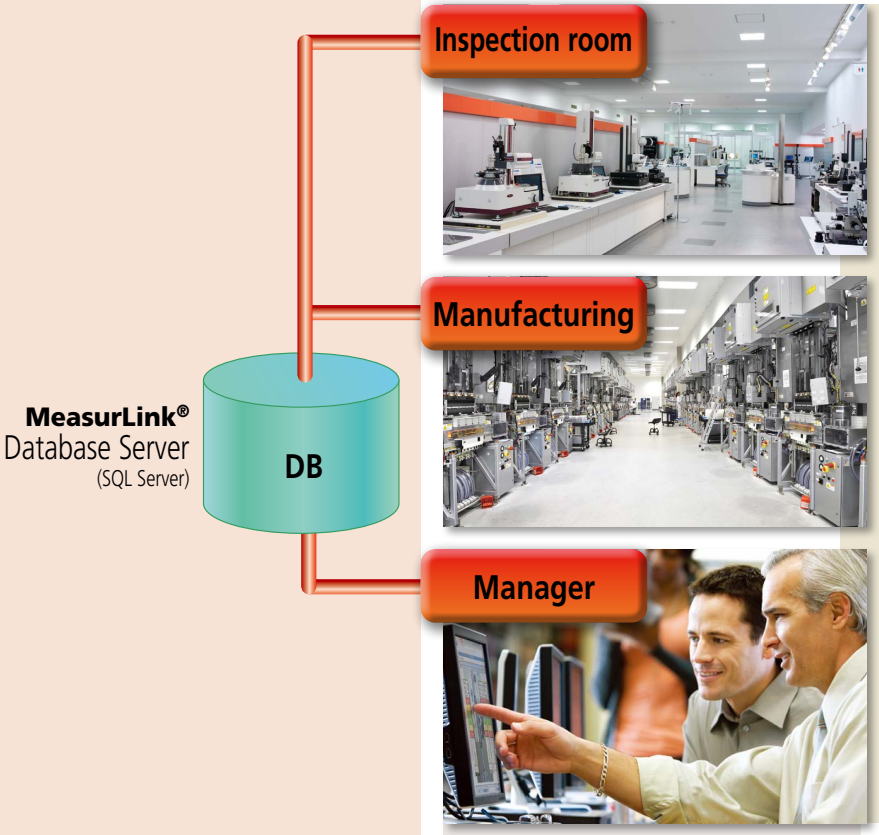

Data collection/Analysis module
MeasurLink® Real-Time
(Refer to page A-27 for details.)

This SPC software allows data collection from each tool and instrument and still allows real-time display of statistical processing data such as control charts, histograms and process capability indexes.

Automatic reporting program
MeasurLink® Report Scheduler
(Refer to page A-28 for details.)

This program automatically outputs reports created by **Real-Time** or **ProcessAnalyzer** in the preset schedule.

Process Management for Managers
MeasurLink® Process Manager
(Refer to page A-29 for details.)

This administrative software enables centralized monitoring of information from all **MeasurLink®** data collection terminals networked together on the shop floor.

Process Analysis module for Managers
MeasurLink® Process Analyzer Proffesional
(Refer to page A-29 for details.)

This administrative software allows confirmation of measurement results and various statistical analyses by access to the database where the measurement data collected with **MeasurLink® Real-Time** is stored.

Evaluation/Analysis Software for Measurement System Analysis (MSA)
MeasurLink® Gage R&R
(Refer to page A-30 for details.)

This is evaluation and analysis software compliant with MSA required in IATF 16949.

Gage Management Software
MeasurLink® Gage Management
(Refer to page A-30 for details.)

This software plans and implements a complete calibration schedule and incorporates a powerful retrieval function in addition to recording and managing the operational state of gages.

Mitutoyo reserves the right to change any or all aspects of any product specification, including prices, designs and service content, without notice.

Mitutoyo

A

MeasurLink® Data Collection/Analysis Software

Real-Time Standard (RT Std)
Real-Time Professional (RT Pro)
Real-Time Professional 3D (RT Pro 3D)

Real-Time is the Statistical Process Control (SPC) MeasurLink® module that collects data from Mitutoyo and third-party measuring devices and systems to provide analysis functionality in real-time by displaying control charts or process capability indexes.

• Various data views

Collected data can be displayed in various views, such as data lists, work instruction images, statistical analysis results, etc. The views can be switched easily according to the needs of the operator.

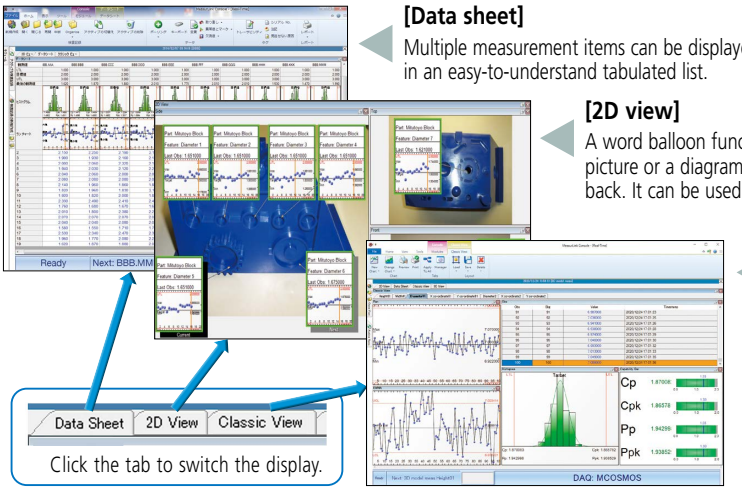

[Data sheet]
Multiple measurement items can be displayed in an easy-to-understand tabulated list.

[2D view]
A word balloon function is available having a picture or a diagram of the workpiece on the back. It can be used as work process instructions.

[Classic view]
Graphs and lists can be freely selected to display data for a single measurement item. It is useful for checking detailed information such as date and time of the acquired data.

• Adding traceability information

Traceability information for each workpiece can be added, for example, serial no., lot no., inspector name, machine no., or cause of problems and remedies. Traceability will also support Barcode scanners for easy error free entry. This information can be used as search criteria when extracting data using the filtering function (**RT Pro**/**RT Pro 3D**) when a problem occurs.

• Alarm function

The operator and management are notified when an "Out of Tolerance" or other events occur.
The method of notification can be selected from a pop-up window, E-mail (Fig. 1), audible alarm or log file.

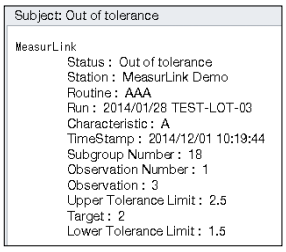
Subject: Out of tolerance

MeasurLink
Status : Out of tolerance
Station : MeasurLink Demo
Routine : AAA
Run : 2014/01/28 TEST-LOT-03
Characteristic : A
TimeStamp : 2014/12/01 10:19:44
Subgroup Number : 18
Observation Number : 1
Observation : 3
Upper Tolerance Limit : 2.5
Target : 2
Lower Tolerance Limit : 1.5

(Fig. 1) Alarm notification by E-mail

• Exporting data to an Excel file

Measurement data can output to an Excel file. This function is useful if the data needs to be used in a department that does not have **MeasurLink®**. (Fig. 2)

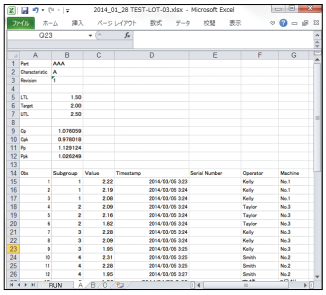

(Fig. 2) Export to Excel

RT Std/RT Pro/RT Pro 3D Common Functions

- Connectable measuring instruments
  - Measuring tool with Digimatic output (equipped with PC data processing unit)

[Supported interfaces]
Wireless (USB) **U-WAVE** (VCP)
Wired (USB) **IT-020U**/**USB-ITN** (VCP or HID)
Wireless (D-sub 9 pin) **IT-007R, MUX-10F**, **DP-1VA LOGGER**, and others
Various RS-232C devices (partially restricted)

- Screen display mode when collecting data
  - Classic view
  - Data sheet
  - 2D view
  - Part data sheet, etc.
- Statistical Analysis result

[Chart]
Xbar-R, Xbar-S, X-Rs control charts, Histogram, Run chart, Pre-control chart, Tier chart, Box plot chart, Meter chart, Indicator bar, Multivariate data control chart, etc.
[Statistics]
Maximum value, Minimum value, Standard deviation, Average ±3σ/4σ/6σ, Process capability indexes (Cp, Cpk, Pp, Ppk), Defect ratio, etc.

- Alarm function

[Target items]
- Out of tolerance
- 1 point exceeds control limit line (following are related to management chart)
- Consecutive 9 points on one side of center line
- 6 points successively increasing or decreasing
  Others including 8 judgment criteria for Shewhart control chart

- Adding traceability information
  - Measurement date (automatically added)
  - Serial No. (Keyboard entry)
  - Special causes and remedies
  - Selection from comment list registered as an option
  - Enter from keyboard when measuring classified title registered as an option (e.g. Lot No. LOT 001)
- Report print out function
  - Measurement values, analysis calculation results and various charts can be arranged to output according to requirements.
- Export function of measurement results
  - Excel
  - Text
  - QIF
  - AQDEF
- Security function
  - Once the access authorization is set, it requires "User name" and "Password" input before the program will start. Data editing actions such as reference, entry and changes require authorization according to the user's role in order to preserve data integrity.
- Operation languages

19 languages are supported:
- English, Japanese, French, German, Dutch, Spanish, Swedish, Polish, Italian, Turkish, Korean, Chinese (simplified/traditional), Thai, Hungarian, Czech, Finnish, Portuguese, Russian

Events possible to be logged

- Measurement data
- Retake/modify data
- Failed data tests
- Assignable Cause and Corrective Action

Mitutoyo reserves the right to change any or all aspects of any product specification, including prices, designs and service content, without notice.

MeasurLink® System Requirements

• Operating environments
[Operating System]
Microsoft Windows 7 (32-bit/64-bit)
Microsoft Windows 7 SP1
Microsoft Windows 8.1 (32-bit/64-bit)
(Microsoft Windows 8.1 RT is not supported)
Windows 10 (32-bit/64-bit)
(Windows 10 Mobile and IoT editions are not supported)
[Database]
Microsoft SQL Server 2017 Standard/Enterprise Edition
Microsoft SQL Server 2016 Standard/Enterprise Edition
Microsoft SQL Server 2014 Standard/Business Intelligense/Enterprise Edition
SQL 2019 Standard/Enterprise

RT Pro/RT Pro 3D Common Functions

• Connectable measuring instrument
· Mitutoyo Measurement Data Management System (equipped with PC data processing unit)
[Supported data processing software]
· CMM: **MCOSMOS V3.2** or later
· Vision System: **QVPAK V10.0** or later/**QSPAK V10.2** or later/**QSPAK MSE V3.1** or later/**QIPAK V4.1** or later
· Vision unit: **QSPAK VUE V4.1** or later
· Surface Roughness/contour instruments: **FORMTRACEPAK V5.311** or later
· Roundness instruments: **ROUNDPAK V7.0** or later
· Hardness testing machines: **AVPAK V2.0** or later
• Filter function
Keyword items for data extraction
· Measurement data (year, month, day, time, week, etc.)
· Serial No.
· Traceability information (e.g. Inspectors, Machine No., etc.)
· Alarm item
• Import function for text data
A custom import template can be built to collect data in **Real-Time Pro/Pro 3D**. MeasurLink® supports ASCII file types such as CSV and TXT with minimum required information (e.g. part name, characteristic name and measurement values, etc.) In addition, MeasurLink® supports QIF, AQDEF, and QMD file types.

RT Pro 3D functions

• Screen display mode when collecting data
· 3D view

Functions		Data collection software		
		Real-Time Standard	Real-Time Professional	Real-Time Professional 3D
Collected data display	Classic view	✓	✓	✓
	Data sheet	✓	✓	✓
	2D view	✓	✓	✓
	3D view (Hoops)			✓
Data extract	Filter		✓	✓
Input from tools and devices	Measuring tools (RS-232C, USB)	✓	✓	✓
	Measuring instruments (DDE)		✓	✓
Text input	Import		✓	✓

Table 1 Data collection/analysis software **Real-Time** functional comparison

• **RT Pro/RT Pro 3D** enables customers to connect and acquire data from Mitutoyo coordinate measuring machines, vision and form measuring systems via native integration (DDE).

• Automatic linking with part programs

To automate the process of linking the CMM, Vision or Form system with MeasurLink®, some easy setup is needed on the device and in MeasurLink®. Then, when the part program is executed, the measurement system will send the part and measurement information to MeasurLink®, along with any tagged data related to the measurement. A new run can be created in **Real-Time Pro/Pro 3D**, or the data can be added to an existing run. The charts and statistics will continuously update and be displayed in the view.

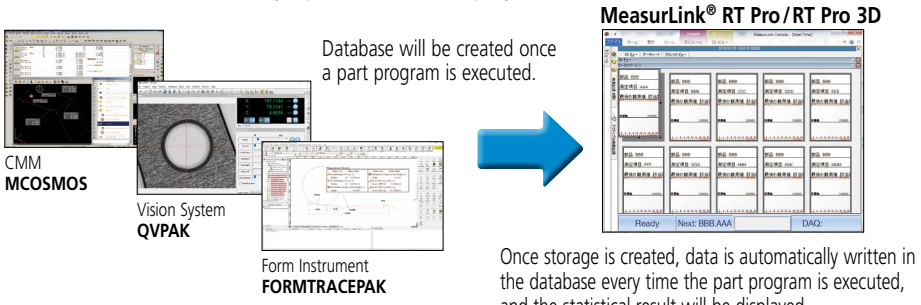

Once storage is created, data is automatically written in the database every time the part program is executed, and the statistical result will be displayed.

• Filtering function

Required data can be easily extracted based on the date and time of the measurement, added comments, or alarms.

• Import function

Measurement data saved in ASCII files can be loaded. Also, a feature to customize a template for loading according to the format is provided.

• RT Pro 3D is a full-spec package

The feature to be measured can be displayed in detail using 3D CAD data.

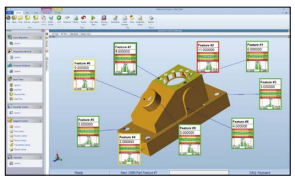

[3D view]

3D graphics library HOOPS displays real view of the workpiece using an hsf file created from 3D CAD data. The displayed workpiece image can be freely turned, translated, or scaled so that you can get a clear view of the feature to be measured.
The word balloons and lead lines that display the measurement result and measured feature will move following the CAD data translation.

MeasurLink® Automatic Report Generation Program MeasurLink® Report Scheduler

Automatically generates a report created by the **Real-Time (RT Std/RT Pro/RT Pro 3D)** or **Process Analyzer Professional** modules, each of which is connected to the network according to a specified schedule.

The Use of MeasurLink® Report Scheduler

• Typical applications



- Automatic generation of a weekly report specified from among last week's data.
- Automatic report generation by extracting only data with tag information about "tool replacement" (due to wear, breakage, etc.)
- Automatic generation of a daily report for each shift by filtering inspection record data on the basis of a shift

MeasurLink® Report Scheduler common functions

• Report output destinations

• Printer, file, E-mail (as an attached document)

Mitutoyo reserves the right to change any or all aspects of any product specification, including prices, designs and service content, without notice.

A

MeasurLink® Optional Process Analysis Software for Managers Process Analyzer Professional

Analyze data collected on all networked Real-Time stations to identify problem areas, take corrective action, and improve the quality of your product. Inspection data can be merged, filtered, charted and printed to identify long-term trends and identify root causes for process improvement.

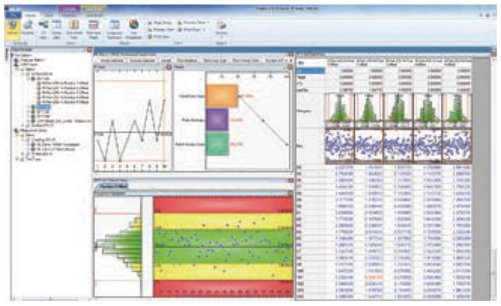

The same data displayable by data collection software can be displayed, including measurement results, charts, and statistical calculation results with the look and feel of Windows Explorer.

• Filtering function that allows data extraction and grouping

Data can be extracted or grouped by selecting the date and time and other traceability information as keywords.

Example) Grouping by Machine No. ..... Cp, Cpk comparison

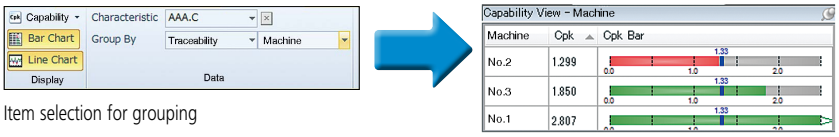

Item selection for grouping

Cpk value and bar graph per machine

MeasurLink® Process Management for Managers Process Manager

Monitor data as it is collected in Real-Time. **Process Manager** provides managers with the perfect tool to organize and maintain a shop-wide quality program at a glance. Display snapshot windows of characteristics that are currently being collected in MeasurLink® Real-Time. The data can be sorted by inspection station, capability or timestamp. Easily see process information without walking from one inspection area to another by viewing current production across all machines. Show clients your quality operation for the entire facility.

• Manager View

Displays various types of charts as an at-a-glance guide. The manager can narrow down all items of data currently being measured into a specific monitoring range of those of critical importance or sort those data (in ascending or descending order) on the basis of process capability index.

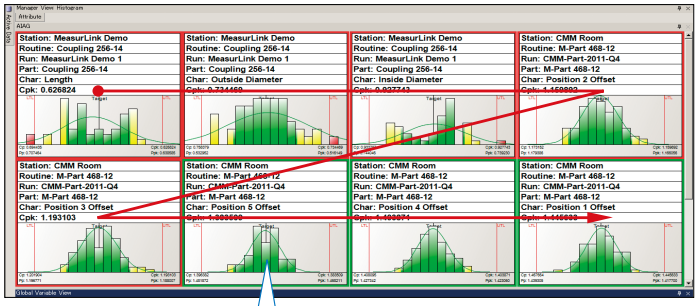

Possible to sort charts in the view and narrow down the monitoring range.

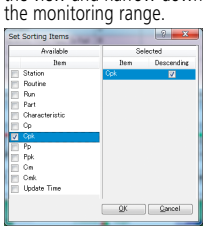

Selects various charts such as run charts and histograms to display as an at-a-glance guide. (Multiple types of charts can be displayed in Manager View.)

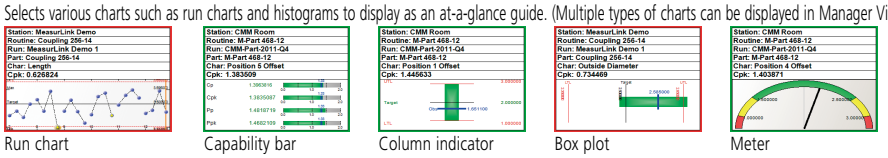

Run chart | Capability bar | Column indicator | Box plot | Meter

PA Pro Functions

• Result display
· Classic view
· Data sheet
· 2D view
· Part data sheet, etc.
• Statistical Analysis result
[Chart]
Xbar-R, Xbar-S, X-Rs control charts, Histogram, Run chart, Pre-control chart, Tear chart, Box plot chart, Meter chart, Indicator bar, multivariate data control chart, etc.
[Statistics]
Maximum value, Minimum value, Standard deviation, Average ±3σ/4σ/6σ, Process capability indexes (Cp, Cpk, Pp, Ppk), Defect ratio, etc.
• Report print out function
· Measurement values, analysis calculation results and various charts can be arranged to output according to requirements.
• Exporting function of measurement result
· Excel

Scatter plots: The relationship between two items can be plotted.

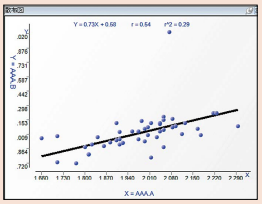

• Filter function
Keyword items for data extraction
· Measurement data (year, month, day, time, week, etc.)
· Serial No.
· Traceability information (e.g. Inspectors, Machine No., etc.)
· Alarm item
• Data processing
· Data file merging, Copying
· Editing
• Data processing capability
Old runs can be archived so they are not available for collection in Real-Time.
• Electronic signature function
· Provides support for medical and pharmaceutical manufacturers electronic records, including audit trails, e-signatures and advanced security.
· Conforms to FDA 21CFR Part 11

Mitutoyo reserves the right to change any or all aspects of any product specification, including prices, designs and service content, without notice.

MeasurLink® Evaluation/Analysis Software for Measurement System Analysis (MSA) Gage R&R

Gage R&R is a collection of techniques whose purpose is to measure the capability of a measurement system for a measurement task. Gage R&R techniques provide information about a measurement system's reproducibility, R&R, location or stability. Graphical tools allow for isolation of gaging problems including inconsistencies in technique between operators or inspectors.

• Automatic calculation of MSA evaluation results

This allows the operator to simply input an evaluation method/evaluation condition and measurement data with the Wizard function. The operator can implement MSA evaluation simply by selecting an "investigation type option", "Measuring instrument option", "data input source option", "parameter option", etc.

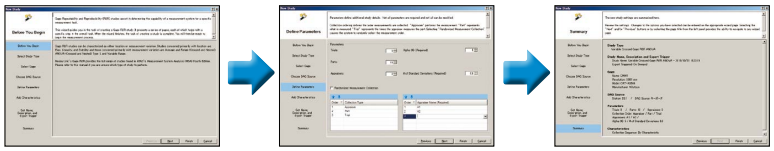

Investigation type options　Parameter options　Overview

• Evaluation method compliant with MSA (fourth edition)

The software can implement evaluation using the following methods compliant with MSA (Measurement System Analysis).

1) Measurement value tolerance Gage R&R variance analysis method
2) Measurement value tolerance Gage R&R range & average method
3) Measurement value branching Gage R&R variance analysis method
4) Measurement value branching Gage R&R average & range method
5) Measurement value range method
6) Measurement value simplified method
7) Measurement value MSA4
8) Deviation
9) Linearity
10) Stability

• Analysis chart view

Various charts such as the control chart are effective for analysis/judgment on variations due to operator, the adequacy of gage accuracy, etc., and remedies for problems.

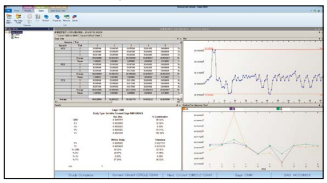

• Registration of gage-specific information

1. Registration of information on gages within the system

This allows registration of gage information on the following items and association with evaluated results.
Registration items: Gage name, maker, model, resolution, unit, measuring range, etc.

2. Information link between MeasurLink® Gage Management and this software

This software can use measuring instruments information that has been registered in **Gage Management** directly as options.
Additionally, since Gage R&R evaluation results are also linked with measuring instruments information, the schedule of Gage R&R expiry dates can be managed by **Gage Management**.

• Output of results as a report

Evaluated results and charts can be printed as a report.

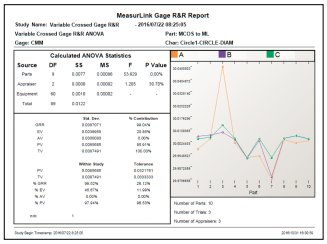

MeasurLink® Gage Management Software Gage Management

This software can help you plan and implement a reliable calibration schedule with a powerful retrieval function in addition to recording and controlling the status of measuring instruments. It enables simple recording of measuring instruments usage state (operation, storage, calibration, Gage R&R, repair and out-of-service) to speedily understand the current location and status of all measuring instruments. Measuring instrument information can be viewed from any networked terminal on which **Gage Management** is installed since the information is centrally managed in a database. Measuring instruments information can be shared between software packages linked to **Gage R&R**.

• Confirmation of detailed gage information

Allows confirmation of detailed information on individual gages. The software allows you to display a list of gages depending on "Calibration Overdue", "Next Month Due", etc., by setting a calibration date and confirm detailed information on the calibration history of gages.

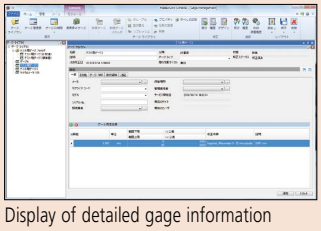

Display of detailed gage information

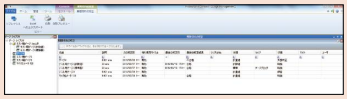

Display of gages listed depending on calibration date

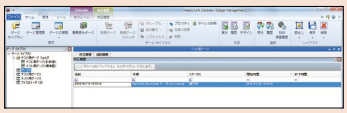

Display of calibration history

• Creation of a list of calibration-targeted gages from the gage management table

The target gages are retrieved from a variety of search items such as gage ID, gage type, model, maker, distributor, calibration date, current usage state and location to create the list.

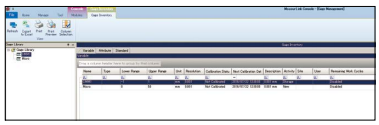

Gage management table

• Registration and running a calibration procedure

Allows simple registration of the calibration procedure for each measuring instruments and implementation of the calibration.

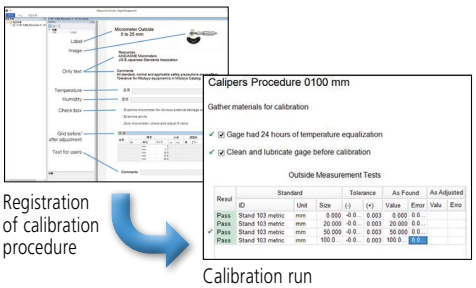

Registration of calibration procedure

Calibration run

Mitutoyo reserves the right to change any or all aspects of any product specification, including prices, designs and service content, without notice.

Mitutoyo

Quality control (QC)

A system for economically producing products or services of a quality that meets customer requirements.

Process quality control

Activities to reduce variation in product output by a process and keep this variation low. Process improvement and standardization as well as technology accumulation are promoted through these activities.

Statistical process control (SPC)

Process quality control through statistical methods.

Population

A group of all items that have characteristics to be considered for improving and controlling processes and quality of product. A group which is treated based on samples is usually the population represented by the samples.

Lot

Collection of product produced under the same conditions.

Sample

An item of product (or items) taken out of the population to investigate its characteristics.

Sample size

Number of product items in the sample.

Bias

Value calculated by subtracting the true value from the mean of measurement values when multiple measurements are performed.

Dispersion, Imprecision

Variation in the values of a target characteristic in relation to the mean value. Standard deviation is usually used to represent the dispersion of values around the mean.

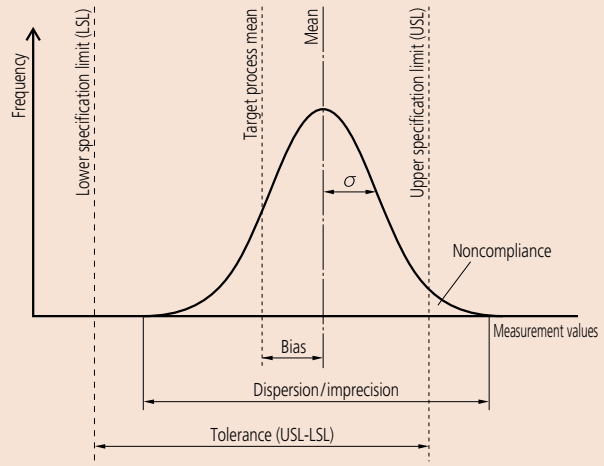

Histogram

A diagram that divides the range between the maximum and the minimum measurement values into several divisions and shows the number of values (appearance frequency) in each division in the form of a bar graph. This makes it easier to understand the rough average or the approximate extent of dispersion. A bell-shaped symmetric distribution is called the normal distribution and is much used in theoretical examples on account of its easily calculable characteristics. However, caution should be observed because many real processes do not conform to the normal distribution, and error will result if it is assumed that they do.

Process capability

Process-specific performance demonstrated when the process is sufficiently standardized, any causes of malfunctions are eliminated, and the process is in a state of statistical control. The process capability is represented by mean $\pm 3\sigma$ or 6σ when the quality characteristic output from the process shows normal distribution. σ (sigma) indicates standard deviation.

Process capability index (PCI or Cp)

The index value is calculated by dividing the tolerance of a target characteristic by the process capability (6σ). The value calculated by dividing the difference between the mean ($\overline{X}$) and the standard value by 3σ may be used to represent this index in cases of a unilateral tolerance. The process capability index assumes that a characteristic follows the normal distribution.

Note: If a characteristic follows the normal distribution, 99.74% data is within the range $\pm 3\sigma$ from the mean.

Bilateral tolerance

$$Cp = \frac{USL-LSL}{6\sigma}$$

USL: Upper specification limit
LSL: Lower specification limit

Unilateral tolerance ... If only the upper limit is stipulated

$$Cp = \frac{USL-\overline{X}}{3\sigma}$$

Unilateral tolerance ... If only the lower limit is stipulated

$$Cp = \frac{\overline{X}-LSL}{3\sigma}$$

Specific examples of a process capability index (Cp) (bilateral tolerance)

Cp=1

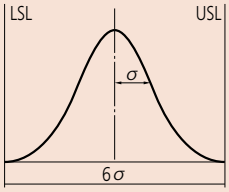

The process capability is barely achieved as the 6 sigma process limits are coincident with the tolerance limits.

Cp=1.33

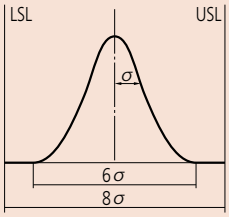

The process capability is the minimum value that can be generally accepted as it is no closer than 1 sigma to the tolerance limits.

Cp=1.67

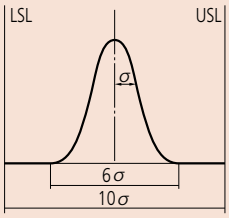

The process capability is sufficient as it is no closer than 2 sigma to the tolerance limits.

Note that Cp only represents the relationship between the tolerance limits and the process dispersion and does not consider the position of the process mean.

Note: A process capability index that takes the difference between the process mean from the target process mean into consideration is generally called Cpk, which is the upper tolerance (USL minus the mean) divided by 3 σ (half of process capability) or the lower tolerance (the mean value minus LSL) divided by 3 σ, whichever is smaller.

Control chart

Used to control the process by separating the process variation into that due to chance causes and that due to a malfunction. The control chart consists of one center line (CL) and the control limit lines rationally determined above and below it (UCL and LCL). It can be said that the process is in a state of statistical control if all points are within the upper and lower control limit lines without notable trends when the characteristic values that represent the process output are plotted. The control chart is a useful tool for controlling process output, and therefore quality.

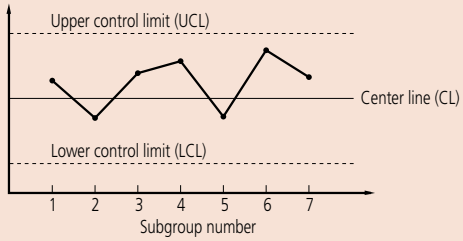

Chance causes

These causes of variation are of relatively low importance. Chance causes are technologically or economically impossible to eliminate even if they can be identified.

$\bar{X}$-R control chart

A control chart used for process control that provides the most information on the process. The $\bar{X}$-R control chart consists of the $\bar{X}$ control chart that uses the mean of each subgroup for control to monitor abnormal bias of the process mean and the R control chart that uses the range for control to monitor abnormal variation. Usually, both charts are used together.

How to read the control chart

Typical trends of successive point position in the control chart that are considered undesirable are shown below. These trends are taken to mean that a 'special cause' is affecting the process output and that action from the process operator is required to remedy the situation. These determination rules only provide a guideline. Take the process-specific variation into consideration when actually making determination rules. Assuming that the upper and the lower control limits are 3 σ away from the center line, divide the control chart into six regions at intervals of 1 σ to apply the following rules. These rules are applicable to the X control chart and the $\bar{X}$ control chart. Note that these 'trend rules for action' were formulated assuming a normal distribution. Rules can be formulated to suit any other distribution.

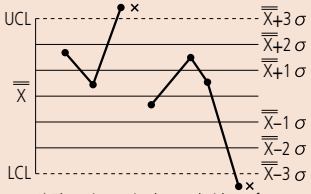

1) There is a point beyond either of the control limit lines (±3 σ).

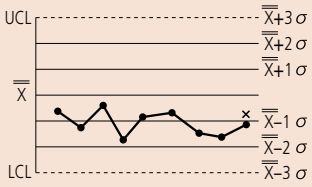

2) Nine consecutive points are to one side of the center line.

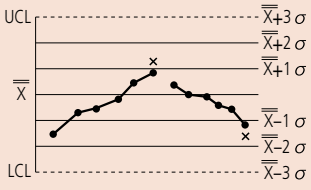

3) Six points consecutively increase or decrease.

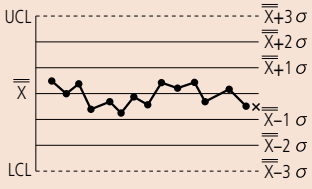

4) 14 points alternately increase and decrease.

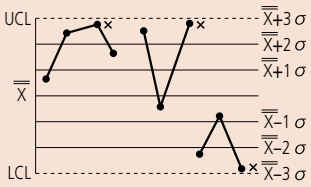

5) Two of three consecutive points are over ±2 σ from the center line on either side.

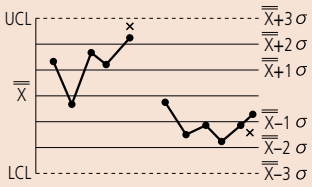

6) Four of five consecutive points are over ±1 σ from the center line on either side.

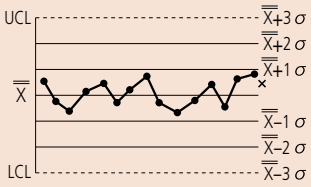

7) There are 15 consecutive points within ±1 σ from the center line.

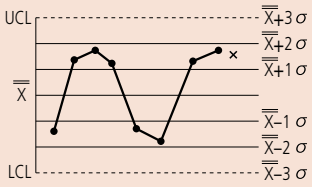

8) There are eight consecutive points over ±1 σ from the center line.

Note: This part of 'Quick Guide to Precision Measuring Instruments' (A-31 to A-32) has been written by Mitutoyo based on its own interpretation of the JIS Quality Control Handbook published by the Japanese Standards Association.

References

- JIS Quality Control Handbook (Japanese Standards Association)

Z 8101: 1981
Z 8101-1: 1999
Z 8101-2: 1999
Z 9020: 1999
Z 9021: 1998

Mitutoyo



High-Accuracy Digimatic Micrometer

Refer to pages B-3 to B-4 for details.



QuantuMike

Refer to pages B-5 to B-6 for details.



Coolant Proof Micrometers

Refer to pages B-7 to B-8 for details.



Digimatic Micrometer Heads

Refer to pages B-84 to B-86 for details.





Micrometer Heads (Fine Spindle Feed of 0.1 mm/rev)

Refer to pages B-114 to B-115 for details.

B

Small Tool Instruments Micrometers Micrometer Heads

MeasurLink® ENABLED
Data Management Software by Mitutoyo

Measurement Data Network System

MeasurLink® is a measurement data management system based on databases (SQL Server). You can build a network to manage the measurement results and measuring machines by simply combining the functions necessary for your purpose.

MeasurLink® is a registered trademark of Mitutoyo Corporation in Japan and Mitutoyo America Corporation in the United States.

U-WAVE fit

Measurement Data Wireless Communication System

Bluetooth® communication enables wireless transfer of measurement data from digimatic micrometers and callipers to PCs, smartphones, tablets and such other devices.

IP65

IP Codes

These are codes that indicate the degree of protection provided (by an enclosure) for the electrical function of a product against the ingress of foreign bodies, dust and water as defined in IEC standards (IEC 60529: 2001) and JIS C 0920: 2003.
(Refer to page IX)

Dust- and Water-Protected
TÜVRheinland CERTIFIED
www.tuv.com
ID 0000040191

TÜV Rheinland Certification Marks

All products with the marks have passed the IP test carried out by the German accreditation organization, TÜV Rheinland.

PROPRIETARY INSPECTION CERTIFICATE

Measuring Instruments Shipped with Inspection Certificate

Mitutoyo guarantees product quality as a leading precision measuring instrument manufacturer and ships measuring instruments with an inspection certificate that includes inspection data so that customers can use them with confidence.

ABSOLUTE™

ABSOLUTE Linear Encoder

Mitutoyo developed the unique absolute method to retain position information after the power is turned off.
The origin is set once - thereafter the live position is displayed when the power is turned on.

INDEX

Micrometers

High-Accuracy Digimatic Micrometer	B-3
QuantuMike	B-5
Coolant Proof Micrometers	B-7
Digimatic Outside Micrometers	B-9
Quickmike	B-11
ABSOLUTE Digimatic Micrometers	B-12
Outside Micrometers	B-13
Ratchet Thimble Micrometer	B-14
Outside Micrometers	B-15
Digit Outside Micrometers	B-18
Outside Micrometers (Non-Rotating Spindle Type)	B-20
Indicator Type Micrometers	B-21
Outside Micrometers with Interchangeable Anvils	B-22
Outside Micrometers with Anvil Extension Collars	B-26
Caliper Type Micrometers	B-29
Screw Thread Micrometers	B-31
Paper Thickness Micrometers	B-34
Disk Micrometers	B-35
Gear Tooth Micrometers	B-38
Disk Micrometers (Non-Rotating Spindle Type)	B-40
Sheet Metal Micrometers	B-43
Tube Micrometers	B-46
Spline Micrometers	B-49
Point Micrometers	B-51
V-Anvil Micrometers	B-53
Blade Micrometers	B-55
Can Seam Micrometers/Hub Micrometers	B-58
Crimp Height Micrometers	B-59
"Uni-Mike"	B-61
Limit Micrometers	B-62
Indicating Micrometers	B-63
Dial Snap Meters	B-65
Snap Meters	B-66
Groove Micrometers	B-67
QUICKmini	B-68
Telescoping Gage Set	B-69
Setting Standards for Outside Micrometers	B-70
Setting Standards for Screw Thread Micrometers	B-72
Setting Standards for V-Anvil Micrometers	B-72
Optical Parallels/Optical Flats	B-73
3-Wire Units/Micrometer Oil	B-74
Color-Coded Ratchet and Speeder Covers	B-75
Micrometer Stands	B-76
Quick Guide to Precision Measuring Instruments	B-77

Micrometer Heads

Micrometer Head Selection Guide	B-83
Digimatic Micrometer Heads	B-84
Small/Ultra-small Type	B-87
Short Thimble with Choice of Diameter	B-89
Small Standard Type	B-92
Small Thimble Diameter Standard Type	B-95
Small Standard Type with Carbide-Tipped Spindle	B-98
Medium-sized Standard Type	B-100
Medium-sized Standard Type with 8 mm Diameter Spindle	B-104
Locking-screw Type	B-108
Non-rotating Spindle Type	B-112
Quick Spindle Feed of 1 mm/rev	B-113
Fine Spindle Feed of 0.1 mm/rev	B-114
Fine spindle Feed of 0.25 mm/rev	B-116
Differential Screw Thread Translator (Extra-Fine Feed) Type	B-117
Large Thimble Type	B-119
XY-Stage Type	B-121
Long Stroke Non-rotating Spindle	B-122
High Accuracy and Resolution	B-122
Digit Counter Type/Micro Jack	B-123
Mounting Fixtures	B-124
Precision Leadscrews	B-126
Quick Guide to Precision Measuring Instruments	B-127

MeasurLink® ENABLED Data Management Software by Mitutoyo

ABSOLUTE™

PROPRIETARY INSPECTION CERTIFICATE

High-Accuracy Digimatic Micrometer SERIES 293

- Enabling 0.1 µm resolution measurement, this micrometer is ideal for customers who need to make highly accurate measurements with a hand-held tool.
- The High-Accuracy Digimatic Micrometer utilizes Mitutoyo's innovative 0.1 µm resolution ABS (absolute) rotary sensor and high-accuracy screw machining technology to reduce the Maximum permissible error to ±0.5 µm, delivering higher accuracy without sacrificing operability.
- A highly rigid frame and high-performance constant-force mechanism enable more stable measurement, while the clicks emitted while the workpiece is being measured assure the operator that measurement is proceeding normally.
- Body heat transferred to the instrument is reduced by a (removable) heat shield, minimizing the error caused by thermal expansion of the frame when performing handheld measurements.
- The ABS (absolute) rotary sensor also eliminates the need to perform origin setting each time the power is turned on, letting you start measuring straight away. With no possibility of overspeed errors, the High-Accuracy Digimatic Micrometer also delivers a higher level of reliability.
- Carbide-tipped measuring faces



293-100-10

SPECIFICATIONS

	Metric	Inch/Metric
Order No.	**293-100-10**	**293-130-10**
Measuring range	0 – 25 mm	0 – 1 in
Resolution	0.0001 mm/0.0005 mm (switchable)	0.000005 in/0.00002 in 0.0001 mm/0.0005 mm (switchable)
Maximum permissible error J_{MPE}	±0.5 µm	±0.00002 in
Flatness/Parallelism	0.3 µm/0.6 µm	0.000012 in/0.000024 in
Measuring surface	ø3.2 mm	
Measuring force	7 to 9 N	
Measuring system	Electromagnetic induction type ABS rotary sensor	
Mass	400 g (440 g with heat shield attached)	
Power supply	Lithium battery (CR2032) ×1	
Battery life	Approx. two years when used under normal conditions	

Measurement example





Recommended micrometer stand: **156-101-10**

Functions

Preset (ABS measurement system):
The measurement origin can be preset to any value within the display range for convenience in measuring.
Zero-setting (INC measurement system):
The display can be zeroed at any position of the spindle, making comparison measurement easier. Returning to the absolute-measurement mode is easily accomplished.
Hold:
The displayed value is held while the spindle is withdrawn and the micrometer moved so that the display can be read at the operator's convenience. After cancelling the hold, the instrument returns to the previous measuring mode (absolute or incremental).
Resolution switching:
The resolution of the display can be switched. If 0.1 µm measurement is not required, the resolution can be switched to 0.5 µm.
Function lock:
Functions such as preset or zero-set can be locked to avoid inadvertently changing the origin position.
On/off:
The power can be turned off after measurement is complete. Even after the power is turned off, the origin or last zero-set position remains in the memory.
Auto power off:
Even if the power is left on, the power turns off automatically if the micrometer is not used within a 20-minute period.
Measurement data output:
Measurement data can be output, allowing easy incorporation of this instrument into a statistical process control or measurement system.
Error alarm:
In the unlikely event of a display overflow or calculation error, an error message is displayed and measurement stops. Measurement cannot continue until the error is corrected.
Also, if the battery voltage drops below a certain point, the battery indicator will turn on before measurement becomes impossible, warning the user that the battery needs to be replaced.

Mitutoyo reserves the right to change any or all aspects of any product specification, including prices, designs and service content, without notice.

Optional Accessories

Order No.	Type	Description
05CZA662	B	Connecting cable (1 m)
05CZA663	B	Connecting cable (2 m)
06AFM380B	B	USB Input Tool Direct (2 m)
02AZD790B	B	Connecting cables for **U-WAVE-T** (160 mm)
02AZE140B	B	Connecting cables for **U-WAVE-T** For foot switch

DIMENSIONS

Unit: mm

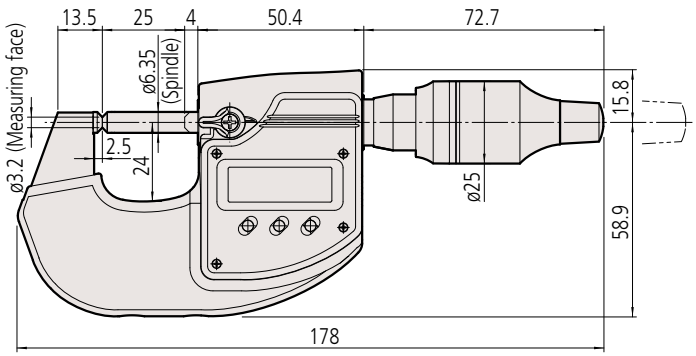

Standard Accessories

Heat shield (**04AAB969A**: **293-100-10**
04AAB969B: **293-130-10**) ×1
Lithium battery CR2032 (1 pc.),
for initial operational checks (standard accessory)
Spanner (**200877**) ×1
Screwdriver (**04AAB985**) ×1
Cleaning paper for measuring faces 1000 sheets
Inspection certificate





Note: To install the heat shield, use the screws attached to the bottom of the micrometer frame.

Mitutoyo reserves the right to change any or all aspects of any product specification, including prices, designs and service content, without notice.

B

QuantuMike
SERIES 293 — IP65 Micrometer with 2 mm/rev Spindle Feed

- Faster measurement is achieved by using a thread which feeds the spindle by 2 mm per revolution of the thimble. Our own technology for high precision thread-cutting enables such a fine and quick measurement.
- Positioning times are reduced by 60%* and measuring times by 35%* compared with a conventional micrometer.

* According to Mitutoyo's comparison test data for measuring time on typical workpieces.

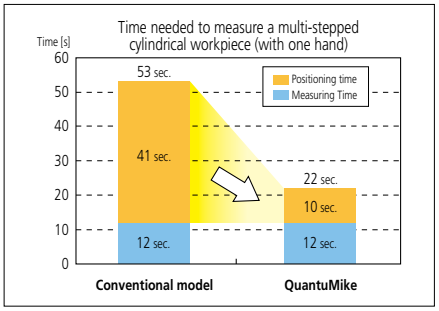

- The ratchet thimble mechanism helps ensure repeatable results. The sound of the ratchet provides the user with a sense of confidence and the speeder enables the rapid spindle feed needed when measuring widely different dimensions.



293-140-30

SPECIFICATIONS

Metric

	Order No.	Range (mm)	Resolution (mm)	Maximum permissible error J_{MPE} (µm)	Flatness (µm)	Parallelism (µm)	Mass (g)
with SPC data output	**293-140-30**	0 - 25	0.001	±1	0.3	1	265
	293-141-30	25 - 50					325
	293-142-30	50 - 75		±2		2	465
	293-143-30	75 - 100					620
without SPC data output	**293-145-30**	0 - 25		±1		1	265
	293-146-30	25 - 50					325
	293-147-30	50 - 75		±2		2	465
	293-148-30	75 - 100					620

Inch / Metric

	Order No.	Range (in)	Resolution	Maximum permissible error J_{MPE} (in)	Flatness (in)	Parallelism (in)	Mass (g)
with SPC data output	**293-180-30**	0 - 1	0.00005 in/ 0.001 mm	±0.00005	0.000012	0.00004	265
	293-181-30	1 - 2					325
	293-182-30	2 - 3		±0.0001		0.00008	465
	293-183-30	3 - 4					620
without SPC data output	**293-185-30**	0 - 1		±0.00005		0.00004	265
	293-186-30	1 - 2					325
	293-187-30	2 - 3		±0.0001		0.00008	465
	293-188-30	3 - 4					620

- Dust/Water protection level: IP65 (IEC60529)*1
- Measuring force: 7 to 12 N*2
- Battery: SR44 (1 pc.), **938882**, for initial operational checks (standard accessory)
- Battery life: Approx. 2.4 years under normal use
- Length standard: Electromagnetic rotary sensor
- Standard accessories: Setting standard, 1 pc. (except for 0 to 25 mm (0 to 1 in) models), Spanner (**301336**), 1 pc.

*1 Rustproofing shall be applied after use.
*2 Measuring force when using the speeder ratchet (Apply a measuring force in the same condition as for measurement and then set the origin.)

MeasurLink® ENABLED
Data Management Software by Mitutoyo

U-WAVE fit

IP65

Dust- and Water-Protected

TÜVRheinland CERTIFIED
www.tuv.com ID 1419032586

PROPRIETARY INSPECTION CERTIFICATE

Measurement example



Quick measurement

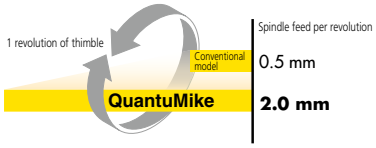

Ratchet thimble mechanism



Ratchet-induced microvibrations along the spindle help ensure repeatable measurements.

Easy to use – even when making measurements one-handed.

Mitutoyo reserves the right to change any or all aspects of any product specification, including prices, designs and service content, without notice.

Functions

Origin point setting (ABS length measurement system):
Pressing the ORIGIN button resets the ABS origin at the current spindle position. Origin values can be set depending on each size.
Zero setting (INC length measurement system):
A brief press on the ZERO/ABS button sets display to zero at the current spindle position and switches to the incremental (INC) measuring mode. A longer press resets to the ABS measuring mode.
Hold:
Pressing the HOLD button freezes the current value in the display. This function is useful for preserving a measurement in situations of poor visibility when the instrument must be moved away from the workpiece before the reading can be recorded.
Function lock:
This function allows the ORIGIN (origin point setting) function and the ZERO (zero setting) function to be locked to prevent these points being reset accidentally.
Auto power ON/OFF:
The reading on the LCD disappears after this instrument is idle for approx. 20 minutes, but the origin point is retained. Turning the spindle causes the reading on the LCD to reappear.
Data output*:
Models equipped with this function have an output port for transferring measurement data to a Statistical Process Control (SPC) system.
Error alarm:
In case of an overflow on the LCD or a computing error, an error message appears on the LCD, and the measuring function stops. This prevents an instrument from giving an erroneous reading. Also, when the battery voltage drops to a certain level, the low-battery-voltage alarm indicator appears well before the micrometer becomes unusable.
* Only for the models with SPC data output

Optional Accessories

Order No.	Type	Description
05CZA662	B	Connecting cable (1 m)
05CZA663	B	Connecting cable (2 m)
06AFM380B	B	USB Input Tool Direct (2 m)
02AZD790B	B	Connecting cables for **U-WAVE-T** (160 mm)
02AZE140B	B	Connecting cables for **U-WAVE-T** For foot switch
264-622	IP67	**U-WAVE-TM**
264-623	Buzzer	**U-WAVE-TM**
264-626	IP67	**U-WAVE-TMB**
264-627	Buzzer	**U-WAVE-TMB**
02AZF310	IP67/ buzzer	Connecting unit for **U-WAVE-TM/TMB**

DIMENSIONS

Unit: mm

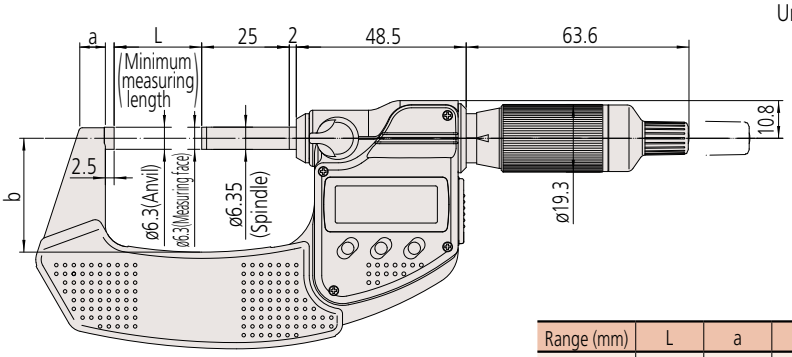

Range (mm)	L	a	b
0 - 25	0	6.5	25
25 - 50	25	7.3	32.5
50 - 75	50	10.1	47
75 - 100	75	11.5	60

Mitutoyo reserves the right to change any or all aspects of any product specification, including prices, designs and service content, without notice.

Coolant Proof Micrometers
SERIES 293 — with Dust/Water Protection Conforming to IP65 Level

- Superior environmental resistance.
- Ratchet thimble provides better operability for one-handed operation.
- Measuring faces: Carbide.
- Oil-resistant material used for all plastic parts.
- Models equipped with a Digimatic output port can form part of a statistical process control or networked measurement system. (Refer to page A-3 for details.)



293-230-30

SPECIFICATIONS

Metric

	Order No.	Range (mm)	Resolution (mm)	Measuring force*1 (N)	Maximum permissible error J_{MPE} (µm)	Parallelism (µm)	Flatness (µm)	Constant measuring force	Mass (g)
with SPC data output	**293-230-30**	0 - 25	0.001	5 - 10	±1	1	0.3	With ratchet stop	270
	293-231-30	25 - 50							330
	293-232-30	50 - 75			±2	2			470
	293-233-30	75 - 100							625
	293-234-30	0 - 25		7 - 12	±1	1		With ratchet thimble	280
	293-235-30	25 - 50							340
	293-236-30	50 - 75			±2	2			480
	293-237-30	75 - 100							635
without SPC data output	**293-240-30**	0 - 25	0.001	5 - 10	±1	1	0.3	With ratchet stop	270
	293-241-30	25 - 50							330
	293-242-30	50 - 75			±2	2			470
	293-243-30	75 - 100							625
	293-244-30	0 - 25		7 - 12	±1	1		With ratchet thimble	280
	293-245-30	25 - 50							340
	293-246-30	50 - 75			±2	2			480
	293-247-30	75 - 100							635

Inch / Metric

	Order No.	Range (in)	Resolution	Measuring force*1 (N)	Maximum permissible error J_{MPE} (in)	Parallelism (in)	Flatness (in)	Constant measuring force	Mass (g)
with SPC data output	**293-330-30**	0 - 1	0.00005 in /0.001 mm	5 - 10	±0.00005	0.00004	0.000012	With ratchet stop	270
	293-331-30	1 - 2							330
	293-332-30	2 - 3			±0.0001	0.00008			470
	293-333-30	3 - 4							625
	293-334-30	0 - 1		7 - 12	±0.00005	0.00004		With ratchet thimble	280
	293-335-30							With friction thimble	275
	293-336-30	1 - 2							335
without SPC data output	**293-340-30**	0 - 1	0.00005 in /0.001 mm	5 - 10	±0.00005	0.00004	0.000012	With ratchet stop	270
	293-341-30	1 - 2							330
	293-342-30	2 - 3			±0.0001	0.00008			470
	293-343-30	3 - 4							625
	293-344-30	0 - 1		7 - 12	±0.00005	0.00004		With ratchet thimble	280
	293-345-30	1 - 2							340
	293-346-30	2 - 3			±0.0001	0.00008			480
	293-347-30	3 - 4							635
	293-348-30	0 - 1			±0.00005	0.00004		With friction thimble	275

- Dust/water protection level: IP65 (IEC60529)*2
- Battery:SR44 (1 pc.), **938882**, for initial operational checks (standard accessory)
- Battery life: Approx. 2.4 years under normal use
- Length standard: Electromagnetic rotary sensor
- Standard accessories: Setting standard, 1 pc. (except for 0 to 25 mm (0 to 1 in) models), Spanner (**301336**), 1 pc.

*1 Measuring force when using the speeder ratchet (Apply a measuring force in the same condition as for measurement and then set the origin.)
*2 Rustproofing shall be applied after use.
Note: All digits of models over 125 mm (5 in) measuring range are presettable.

DIMENSIONS

Ratchet stop

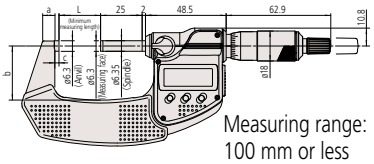

Measuring range: 100 mm or less

Ratchet thimble type

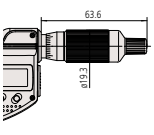

Unit: mm

Range (mm)	Order No.	L	a	b	c
0 - 25	**293-230-30/293-240-30**	0	6.5	25	2.5
25 - 50	**293-231-30/293-241-30**	25	7.3	32.5	
50 - 75	**293-232-30/293-242-30**	50	10.1	47	
75 - 100	**293-233-30/293-243-30**	75	11.5	60	
0 - 25	**293-234-30/293-244-30**	0	6.5	25	
25 - 50	**293-235-30/293-245-30**	25	7.3	32.5	

MeasurLink® ENABLED
Data Management Software by Mitutoyo

U-WAVE fit

IP65

TÜVRheinland CERTIFIED
Dust- and Water-Protected
www.tuv.com ID 0000040191

PROPRIETARY INSPECTION CERTIFICATE

Functions

Origin point setting (ABS measurement system):
Resets the ABS origin at the current spindle position to the minimum value of the measuring range and switches to ABS mode.
Zero-setting:
A brief press on the ZERO/ABS button sets display to zero at the current spindle position and switches to the incremental (INC) measuring mode. A longer press resets to the ABS measuring mode.
Hold:
Pressing the HOLD button freezes the current value in the display. This function is useful for preserving a measurement in situations of poor visibility where the instrument must be moved away from the workpiece before the reading can be recorded.
Data output*:
Models equipped with this function have an output port for transferring measurement data to a Statistical Process Control (SPC) system.
* Only models with the data output function
Auto power ON / OFF:
The reading on the LCD disappears after this instrument is idle for about 20 minutes, but the reading and measurement mode are retained. Turning the spindle causes the reading to reappear.
Error alarm:
In case of an overflow on the LCD or a computing error, an error message appears on the LCD, and the measuring function stops. This prevents an instrument from giving an erroneous reading. Also, when the battery voltage drops to a certain level, the low-battery-voltage alarm indicator appears well before the micrometer becomes unusable.
Function lock:
This function allows the ORIGIN (origin point setting) function and the ZERO (zero-setting) function to be locked to prevent these points being reset accidentally.

Optional Accessories

Refer to page B-8.

Mitutoyo reserves the right to change any or all aspects of any product specification, including prices, designs and service content, without notice.

MeasurLink® ENABLED Data Management Software by Mitutoyo

U-WAVE fit

IP65

Dust- and Water-Protected

TÜVRheinland CERTIFIED www.tuv.com ID 0000040191

PROPRIETARY INSPECTION CERTIFICATE

Functions

Refer to page B-7.

Optional Accessories

Only for models with data output function

Order No.	Type	Description
05CZA662	B	Connecting cable (1 m)
05CZA663	B	Connecting cable (2 m)
06AFM380B	B	USB Input Tool Direct (2 m)
02AZD790B	B	Connecting cables for **U-WAVE-T** (160 mm)
02AZE140B	B	Connecting cables for **U-WAVE-T** For foot switch
264-622	IP67	**U-WAVE-TM**
264-623	Buzzer	**U-WAVE-TM**
264-626	IP67	**U-WAVE-TMB**
264-627	Buzzer	**U-WAVE-TMB**
02AZF310	IP67/ buzzer	Connecting unit for **U-WAVE-TM/TMB**

Coolant Proof Micrometers
SERIES 293 — with Dust/Water Protection Conforming to IP65 Level

- Superior environmental resistance.
- Measuring faces: Carbide.
- Oil-resistant material used for all plastic parts.
- Models equipped with a Digimatic output port can form part of a statistical process control or networked measurement system. (Refer to page A-3 for details.)



293-252-30

SPECIFICATIONS

Metric

	Order No.	Range (mm)	Resolution (mm)	Measuring force*1 (N)	Maximum permissible error J_{MPE} (µm)	Parallelism (µm)	Flatness (µm)	Constant measuring force	Mass (g)
with SPC data output	**293-250-30**	100 - 125	0.001	5 - 10	±2	3	0.3	With ratchet stop	600
	293-251-30	125 - 150							740
	293-252-30	150 - 175			±3				800
	293-253-30	175 - 200				4			970
	293-254-30	200 - 225							1100
	293-255-30	225 - 250			±4				1270
	293-256-30	250 - 275							1370
	293-257-30	275 - 300				5			1590

Inch / Metric

	Order No.	Range (in)	Resolution	Measuring force*1 (N)	Maximum permissible error J_{MPE} (in)	Parallelism (in)	Flatness (in)	Constant measuring force	Mass (g)
with SPC data output	**293-350-30**	4 - 5	0.0001 in /0.001 mm	5 - 10	±0.0001	0.00012	0.000012	With ratchet stop	600
	293-351-30	5 - 6							740
	293-352-30	6 - 7			±0.00015				800
	293-353-30	7 - 8				0.00016			970
	293-354-30	8 - 9							1100
	293-355-30	9 - 10			±0.0002				1270
	293-356-30	10 - 11							1370
	293-357-30	11 - 12				0.0002			1590

- Dust/water protection level: IP65 (IEC60529)*2
- Battery:SR44 (1 pc.), **938882**, for initial operational checks (standard accessory)
- Battery life: Approx. 2.4 years under normal use
- Length standard: Electromagnetic rotary sensor
- Standard accessories: Setting standard, 1 pc. (except for 0 to 25 mm (0 to 1 in) models), Spanner (**301336**), 1 pc.

*1 Measuring force when using the speeder ratchet (Apply a measuring force in the same condition as for measurement and then set the origin.)
*2 Rustproofing shall be applied after use.
Note: All digits of models over 125 mm (5 in) measuring range are presettable.

DIMENSIONS

Unit: mm

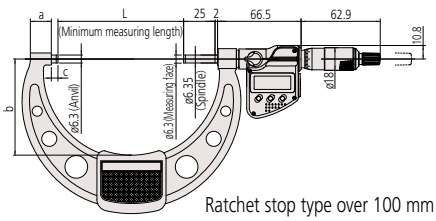

Ratchet stop type over 100 mm

Range (mm)	Order No.	L	a	b	c
100 - 125	**293-250-30**	100	16.7	76	5.3
125 - 150	**293-251-30**	125	18.8	90	5.7
150 - 175	**293-252-30**	150	19.1	103	6.1
175 - 200	**293-253-30**	175	18.2	115	6.3
200 - 225	**293-254-30**	200	16.8	126	6.7
225 - 250	**293-255-30**	225	18	139	5.5
250 - 275	**293-256-30**	250		152	6.5
275 - 300	**293-257-30**	275		166	

Mitutoyo reserves the right to change any or all aspects of any product specification, including prices, designs and service content, without notice.

Mitutoyo

MeasurLink® ENABLED
Data Management Software by Mitutoyo

Digimatic Outside Micrometers SERIES 293

- Constant measuring force: ratchet stop
- Interface Input Tools are available that enable the conversion of measurement data to keyboard signals that are then directly input to cells in off-the-shelf spreadsheet software such as Excel. (Refer to page A-5 for details.)
- Measuring faces: Carbide.



293-582

SPECIFICATIONS

Metric

Order No.	Range (mm)	Resolution (mm)	Measuring force (N)	Maximum permissible error J_{MPE} (µm)	Flatness (µm)	Parallelism (µm)
293-582	300 - 325	0.001	10 - 15	±6	0.6	5
293-583	325 - 350					
293-584	350 - 375					
293-585	375 - 400			±7		6
293-586	400 - 425					
293-587	425 - 450					
293-588	450 - 475			±8		
293-589	475 - 500					7

Inch / Metric

Order No.	Range (in)	Resolution	Measuring force (N)	Maximum permissible error J_{MPE} (in)	Flatness (in)	Parallelism (in)
293-782	12 - 13	0.0001 in /0.001 mm	10 - 15	±0.0003	0.000024	0.0002
293-783	13 - 14					
293-784	14 - 15					
293-785	15 - 16			±0.00035		0.00024
293-786	16 - 17					
293-787	17 - 18					
293-788	18 - 19			±0.0004		
293-789	19 - 20					0.00028

- SR44 (2 pcs.), **938882**, for initial operational checks (standard accessory)
- Battery life: Approx. 1.8 years under normal use
- Length standard: Electromagnetic rotary sensor
- Standard accessories: Setting standard, 1 pc., Spanner (**200154**), 1 pc.

DIMENSIONS

Unit: mm

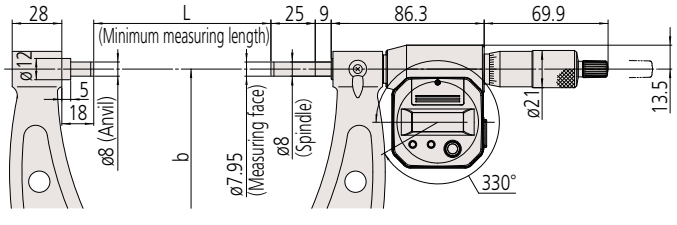

Range (mm)	L	b
300 - 325	300	187
325 - 350	325	199
350 - 375	350	212
375 - 400	375	224
400 - 425	400	236
425 - 450	425	248
450 - 475	450	261
475 - 500	475	273

Functions

Origin point setting (ABS measurement system):
Resets the ABS origin at the current spindle position to the minimum value of the measuring range and switches to ABS mode.
Zero-setting (INC measurement system):
A brief press on the ZERO/ABS button sets display to zero at the current spindle position and switches to the incremental (INC) measuring mode. A longer press resets to the ABS measuring mode.
Hold:
Pressing the HOLD button freezes the current value in the display. This function is useful for preserving a measurement in situations of poor visibility where the instrument must be moved away from the workpiece before the reading can be recorded.
Function lock:
This function allows the PRESET (origin point setting) function and the ZERO (zero-setting) function to be locked to prevent these points being reset accidentally.
Auto power ON / OFF:
The reading on the LCD disappears after this instrument is idle for about 20 minutes, but the reading and measurement mode are retained. Turning the spindle causes the reading to reappear.
Data output:
Models equipped with this function have an output port for transferring measurement data to a Statistical Process Control (SPC) system.
Error alarm:
In case of an overflow on the LCD or a computing error, an error message appears on the LCD, and the measuring function stops. This prevents an instrument from giving an erroneous reading. Also, when the battery voltage drops to a certain level, the low-battery-voltage alarm indicator appears well before the micrometer becomes unusable.

Optional Accessories

Order No.	Type	Description
04AZB512	CR	Connecting cable (1 m)
04AZB513	CR	Connecting cable (2 m)
959149	C	Connecting cable (1 m)
959150	C	Connecting cable (2 m)

Mitutoyo reserves the right to change any or all aspects of any product specification, including prices, designs and service content, without notice.

Digimatic Outside Micrometers
SERIES 293

- Simple design and excluding the data output function keeps price economical.
- One switch operation (Origin Set) for easy use.
- Extended battery life of approximately 2.4 years.
- Equipped with Ratchet Stop for constant measuring force.
- Measuring faces: Carbide.



293-821-30

Functions

Zero-setting:
A brief press on the ORIGIN button sets display to zero at the current spindle position (zero-setting), which allows easy comparison measurement.

Auto power ON / OFF:
The reading on the LCD disappears after this instrument is idle for about 20 minutes, but the reading is retained. Turning the spindle causes the reading on the LCD to reappear.

Error alarm:
In case of an overflow on the LCD or a computing error, an error message appears on the LCD, and the measuring function stops. This prevents an instrument from giving an erroneous reading. Also, when the battery voltage drops to a certain level, the low-battery-voltage alarm indicator appears well before the micrometer becomes unusable.

SPECIFICATIONS

Metric With ratchet stop

Order No.	Range (mm)	Resolution (mm)	Measuring force (N)	Maximum permissible error J_{MPE} (µm)	Flatness (µm)	Parallelism (µm)	Mass (g)
293-821-30	0 - 25	0.001	5 - 10	±2	0.3	2	270

Inch / Metric With ratchet stop

Order No.	Range (in)	Resolution	Measuring force (N)	Maximum permissible error J_{MPE} (in)	Flatness (in)	Parallelism (in)	Mass (g)
293-831-30	0 - 1	0.00005 in/0.001 mm	5 - 10	±0.0001	0.000012	0.00008	270

Inch / Metric With friction thimble

Order No.	Range (in)	Resolution	Measuring force (N)	Maximum permissible error J_{MPE} (in)	Flatness (in)	Parallelism (in)	Mass (g)
293-832-30	0 - 1	0.00005 in/0.001 mm	5 - 10	±0.0001	0.000012	0.00008	270

- SR44 (1 pc.), **938882**, for initial operational checks (standard accessory)
- Length standard: Electromagnetic rotary sensor
- Battery life: Approx. 2.4 years under normal use
- Spanner (**301336**), 1 pc.

DIMENSIONS

Unit: mm

Ratchet thimble type

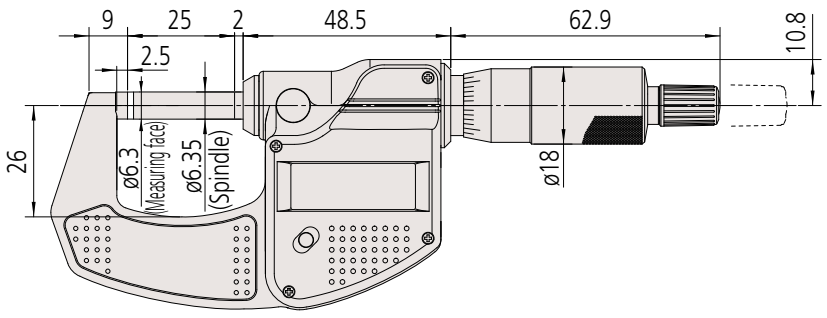

Mitutoyo reserves the right to change any or all aspects of any product specification, including prices, designs and service content, without notice.

B

Quickmike
SERIES 293 — IP65 ABSOLUTE Digimatic Micrometers

- The Quickmike provides a speedy spindle feed of 10 mm per thimble rotation which enables widely differently sized features to be measured quickly.
- Set the origin only once. The absolute linear scale maintains the origin throughout the life of battery, meaning no more zero setting (presetting) or overspeed error.
- Measuring faces: Carbide.
- Supplied with a Ratchet Stop for constant measuring force.



293-666-20

SPECIFICATIONS

Metric

Order No.	Range (mm)	Resolution (mm)	Measuring force (N)	Maximum permissible error J_{MPE} (µm)	Flatness (µm)	Parallelism (µm)	Constant measuring force	Mass (g)	Output function
293-666-20	0 - 30	0.001	5 - 12	±2	0.3	2	Yes	275	With
293-667-20	25 - 55							340	
293-668-20	50 - 80			±3				480	
293-669-20	75 - 105					3		585	

Inch / Metric

Order No.	Range (in)	Resolution	Measuring force (N)	Maximum permissible error J_{MPE} (in)	Flatness (in)	Parallelism (in)	Constant measuring force	Mass (g)	Output function
293-676-20	0 - 1.2	0.00005 in/ 0.001 mm	5 - 12	±0.0001	0.000012	0.00008	Yes	275	With
293-677-20	1 - 2.2							340	
293-678-20	2 - 3.2			±0.00015				480	
293-679-20	3 - 4.2					0.00012		585	

- SR44 (1 pc.), **938882**, for initial operational checks (standard accessory)
- Battery life: Approx. 5 years under normal use
- Approx. 18,000 hours in continuous use (1 year previous models **293-667**/**68**/**69**/**77**/**78**/**79**)
- Length standard: Electrostatic capacity absolute sensor
- Standard accessories: Setting standard, 1 pc. (except for measuring range 0 to 30 mm (0 to 1.2 in) models)
- Maximum response speed: without limit
- The non-rotating spindle enables even inexperienced operators to perform measurements repeatably and accurately.

DIMENSIONS

Unit: mm

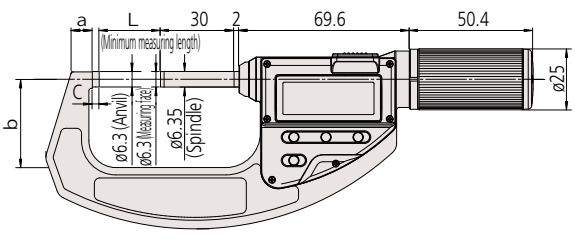

Range (mm)	L	a	b	c
0 - 30	0	6.2	25	2
25 - 55	25	8.5	36	2.8
50 - 80	50	10.3	47	2.8
75 - 105	75	10.7	60	2.8

MeasurLink® ENABLED
Data Management Software by Mitutoyo

ABSOLUTE™

IP65 Dust- and Water-Protected

TÜVRheinland CERTIFIED www.tuv.com ID 0000063013

Measurement example



Optional Accessories

Order No.	Type	Description
05CZA662	B	Connecting cable (1 m)
05CZA663	B	Connecting cable (2 m)
06AFM380B	B	USB Input Tool Direct (2 m)
02AZD790B	B	Connecting cables for **U-WAVE-T** (160 mm)
02AZE140B	B	Connecting cables for **U-WAVE-T** For foot switch

Mechanism

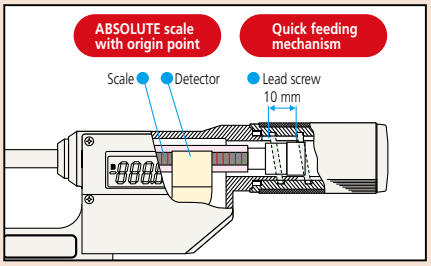

Mitutoyo reserves the right to change any or all aspects of any product specification, including prices, designs and service content, without notice.

MeasurLink® ENABLED Data Management Software by Mitutoyo ABSOLUTE™

ABSOLUTE Digimatic Micrometers
SERIES 227 — with Adjustable Measuring Force

- Digimatic micrometer dedicated to applications requiring a constant/low measuring force such as measuring wire, paper, and plastic/rubber parts.
- Measuring data can be hold at the measuring force setting. This function provides stable measurement and repeatability.
- Measuring force is adjustable (in steps) to suit various kinds of workpieces.
- Non-rotating spindle.
- Measuring faces: Carbide.



227-201-20

Measurement example



Functions

Adjustable measuring force mechanism
Origin point setting
Zero setting
Hold
Function Lock
Auto power off
Measurement data output
Error alarm

Optional Accessories

Order No.	Type	Description
05CZA662	B	Connecting cable (1 m)
05CZA663	B	Connecting cable (2 m)
06AFM380B	B	USB Input Tool Direct (2 m)
02AZD790B	B	Connecting cables for **U-WAVE-T** (160 mm)
02AZE140B	B	Connecting cables for **U-WAVE-T** For foot switch

Adjustable Measuring Force



To preset the measuring force, adjust the measuring force setting scale on the thimble with the screwdriver supplied.

Constant-Measuring-Force Mechanism

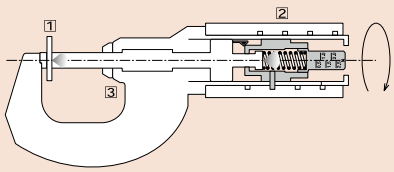

1 Measuring force is generated by the action of trapping a workpiece between the spindle face and the anvil.
2 The constant-force unit applies the specified measuring force.
3 When the preset measuring force is reached, the count on the LCD is automatically held and the hold symbol appears.
(To cancel the hold, reverse the thimble more than 1/10 revolution and press the hold button.)

SPECIFICATIONS

Metric

Order No.	Range (mm)	Resolution (mm)	Measuring force (N)	Maximum permissible error J_{MPE} (µm)	Flatness (µm)	Parallelism (µm)	Measuring force (N)	Accuracy of the selected measuring force* (N)	Repeatability of measuring force* (N)	Mass (g)
227-201-20	0 - 15	0.001	0.5 - 2.5 (adjustable)	±2	0.3	2	0.5, 1.0, 1.5, 2.0, 2.5	± (0.1+ the selected measuring force/10)	within 0.1	300
227-203-20	15 - 30									380
227-205-20	0 - 10		2 - 10 (adjustable)				2, 4, 6, 8, 10	± (0.4+ the selected measuring force/10)	within 0.4	345
227-206-20	10 - 20									425
227-207-20	20 - 30									415

Inch / Metric

Order No.	Range (in)	Resolution	Measuring force (N)	Maximum permissible error J_{MPE} (in)	Flatness (in)	Parallelism (in)	Measuring force (N)	Accuracy of the selected measuring force* (N)	Repeatability of measuring force* (N)	Mass (g)
227-211-20	0 - 0.6	0.00005 in/ 0.001 mm	0.5 - 2.5 (adjustable)	±0.0001	0.000012	0.00008	0.5, 1.0, 1.5, 2.0, 2.5	± (0.1+ the selected measuring force/10)	within 0.1	300
227-213-20	0.6 - 1.2									380
227-215-20	0 - 0.4		2 - 10 (adjustable)				2, 4, 6, 8, 10	± (0.4+ the selected measuring force/10)	within 0.4	345
227-216-20	0.4 - 0.8									425
227-217-20	0.8 - 1.2									415

- Measurement posture: horizontal orientation only (Recommended spindle inclination: within ±3°)
- SR44 (1 pc.), **938882**, for initial operational checks (standard accessory)
- Battery life: Approx. 5 years under normal use
- Length standard: Electrostatic capacity absolute sensor
- Standard accessories: Setting standard, 1 pc. (except for measuring range 0 to 15 mm (0 to 0.6 in)/0 to 10 mm (0 to 0.4 in) models), Screwdriver (**210183**), 1 pc.

* These values are guaranteed when micrometer is used in a horizontal orientation (within ±3 degrees)

DIMENSIONS

Unit: mm

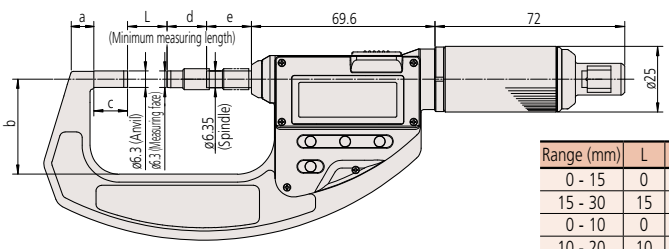

Range (mm)	L	a	b	c	d	e
0 - 15	0	6.2	25	2	15	17
15 - 30	15	8.5	36	12.8		
0 - 10	0	6.2	25	2	10	22
10 - 20	10	8.5	36	17.8		
20 - 30	20			7.8		

Mitutoyo reserves the right to change any or all aspects of any product specification, including prices, designs and service content, without notice.

Outside Micrometers SERIES 102

- Heat-insulated frame.
- Cut-away frame (behind anvil) for measuring in hard-to-reach places.
- Equipped with Ratchet Stop for constant measuring force.
- Measuring faces: Carbide.
- In addition to standard specification, a non-rotating spindle type tooth thickness micrometer (refer to page B-40 for details) is also available.



Ratchet stop
102-301

Measurement example



Mechanism

Ratchet stop type

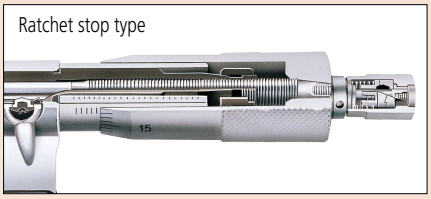

Friction thimble type



SPECIFICATIONS

Metric

Order No.	Range (mm)	Graduation (mm)	Measuring force (N)	Maximum permissible error J_{MPE} (µm)	Flatness (µm)	Parallelism (µm)	Constant measuring force
102-301	0 - 25	0.01	5 - 10	±2	0.6	2	Ratchet stop
102-302	25 - 50						
102-303	50 - 75						
102-304	75 - 100			±3		3	

Metric

Order No.	Range (mm)	Graduation (mm)	Measuring force (N)	Maximum permissible error J_{MPE} (µm)	Flatness (µm)	Parallelism (µm)	Constant measuring force
102-311	0 - 25	0.001	5 - 10	±1	0.3	1	Ratchet stop
102-313							Friction thimble
102-312	25 - 50						Ratchet stop

Inch

Order No.	Range (in)	Graduation (in)	Measuring force (N)	Maximum permissible error J_{MPE} (in)	Flatness (in)	Parallelism (in)	Constant measuring force
102-327-10	0 - 1	0.0001	5 - 10	±0.0001	0.000024	0.00008	Ratchet stop
102-329-10							Friction thimble
102-328-10	1 - 2						Ratchet stop
102-330-10							Friction thimble
102-331-10	2 - 3						Ratchet stop
102-332-10	3 - 4			±0.00015		0.00012	Ratchet stop

Metric Micrometer set

Order No.	Range (mm)	Models included
102-911-40	0 - 100 (Four micrometers per set)	• **102-301** **102-302** **102-303** **102-304** • 3 micrometer standards

- Standard accessories: Setting standard, 1 pc. (except for measuring range 0 to 25 mm models)
  Spanner (**301336**), 1 pc. (for measuring range 0 to 25 mm/25 to 50 mm models)
  Spanner (**200877**), 1 pc. (for measuring range 50 to 75 mm/75 to 100 mm models)

DIMENSIONS

Unit: mm

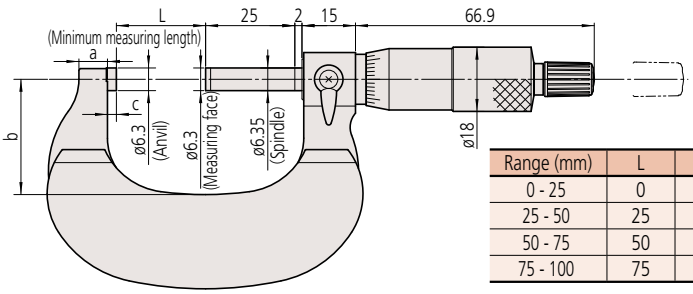

Range (mm)	L	a	b	c
0 - 25	0	5	26	2.5
25 - 50	25	7.8	32	
50 - 75	50	10.6	45	
75 - 100	75	11	58	

Mitutoyo reserves the right to change any or all aspects of any product specification, including prices, designs and service content, without notice.

Ratchet Thimble Micrometer
SERIES 102 — Outside Micrometers

- More accurate in easy one-handed operation.
- Ratchet function works both from the thimble and the speeder.
- Rotating the thimble/speeder causes the ratchet mechanism to operate and apply a constant measuring force to the workpiece.
- Heat-insulated frame.
- Measuring faces: Carbide.

Measurement example



Internal Structure

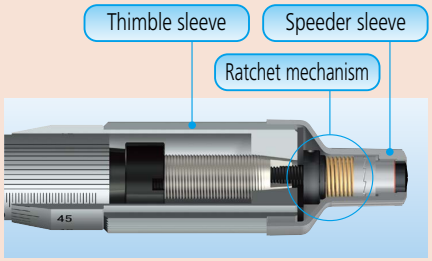



102-701

SPECIFICATIONS

Metric

Order No.	Range (mm)	Graduation (mm)	Measuring force (N)	Maximum permissible error J_{MPE} (µm)	Flatness (µm)	Parallelism (µm)	Mass (g)
102-701	0 - 25	0.01	5 - 10	±2	0.6	2	180
102-707		0.001					
102-702	25 - 50	0.01					270
102-708		0.001					

Inch

Order No.	Range (in)	Graduation (in)	Measuring force (N)	Maximum permissible error J_{MPE} (in)	Flatness (in)	Parallelism (in)	Mass (g)
102-717	0 - 1	0.0001	5 - 10	±0.0001	0.000024	0.00008	180
102-718	1 - 2						270

• Standard accessories: Setting standard, 1 pc. (except for measuring range 0 to 25 mm (0 to 1 in) models), Spanner (**301336**), 1 pc.

DIMENSIONS

Unit: mm

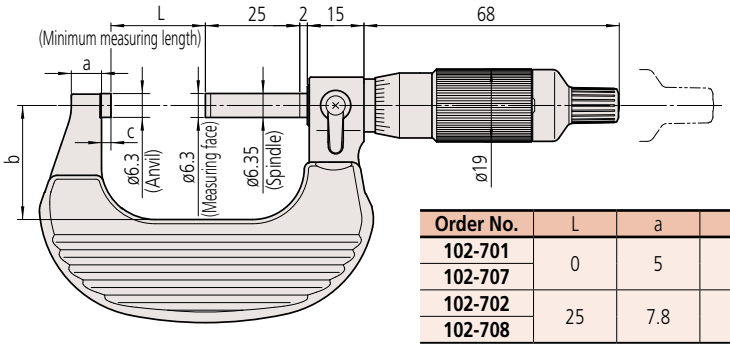

Order No.	L	a	b	c
102-701	0	5	26	2.5
102-707				
102-702	25	7.8	30	
102-708				

Outside Micrometers SERIES 103

- Baked-enamel-finished frame.
- Measuring faces: Carbide.
- Equipped with Ratchet Stop for constant measuring force.



103-137



103-139-10

Measurement example



Metric With ratchet stop

Order No.	Range (mm)	Graduation (mm)	MPE*1 (µm)	Measuring force (N)	Flatness (µm)	Parallelism (µm)
103-129	0 - 25	0.001	±2	5 - 10	0.6	2
103-130	25 - 50	0.001				
103-139-10	50 - 75	0.01				
103-140-10	75 - 100		±3			3
103-141-10	100 - 125					
103-142-10	125 - 150					
103-143-10	150 - 175		±4			4
103-144-10	175 - 200					
103-145-10	200 - 225					
103-146-10	225 - 250		±5			
103-147-10	250 - 275					
103-148-10	275 - 300					5
103-149	300 - 325		±6	10 - 15	1	
103-150	325 - 350					
103-151	350 - 375					
103-152	375 - 400		±7			6
103-153	400 - 425					
103-154	425 - 450					
103-155	450 - 475		±8			7
103-156	475 - 500					
103-157	500 - 525					
103-158	525 - 550		±9			
103-159	550 - 575					
103-160	575 - 600					8
103-161	600 - 625		±10			
103-162	625 - 650					
103-163	650 - 675					
103-164	675 - 700		±11			9
103-165	700 - 725					
103-166	725 - 750					
103-167	750 - 775		±12			
103-168	775 - 800					10
103-169	800 - 825					
103-170	825 - 850		±13			
103-171	850 - 875					
103-172	875 - 900					11
103-173	900 - 925		±14			
103-174	925 - 950					
103-175	950 - 975					
103-176	975 - 1000		±15			12

Metric With ratchet stop

Order No.	Range (mm)	Graduation (mm)	MPE*1 *2 (µm)	Measuring force (N)	Flatness (µm)	Parallelism (µm)
103-137	0 - 25	0.01	±2	5 - 10	0.6	2
103-138	25 - 50	0.01				

- Standard accessories: Setting standard, 1 pc. (except for measuring range 0 to 25 mm (0 to 1 in) models), Spanner (**301336**), 1 pc. (for maximum measuring range up to 300 mm (12 in)), Spanner (**200154**), 1 pc. (for maximum measuring range 325 mm (13 in) or over)

*1 MPE: Maximum permissible error J_{MPE}

*2 Maximum permissible error of the indication measured by contacting the full measuring face with the object to be measured. J_{MPE} is a term specified by JIS B 7502: 2016 which has been prepared based on ISO 3611: 2010 with some modifications of the technical contents. The measurement method has not been changed from JIS B 7502: 1994. For details refer to page B-82.

Mitutoyo reserves the right to change any or all aspects of any product specification, including prices, designs and service content, without notice.



103-904-10
- Range: 0 - 6 in (6 pcs./set)
- Models included: **103-177**, **103-178**, **103-179**, **103-180**, **103-181**, **103-182**, 5 micrometer standards



103-905-10
- Range: 0 - 12 in (12 pcs./set)
- Models included: All micrometers of **103-904-10** and **103-906** in one set, 11 micrometer standards



103-906
- Range: 6 - 12 in (6 pcs./set)
- Models included: **103-183**, **103-184**, **103-185**, **103-186**, **103-187**, **103-188**, 6 micrometer standards

Inch With ratchet stop

Order No.	Range (in)	Graduation (in)	MPE*1 (in)	Measuring force (N)	Flatness (in)	Parallelism (in)
103-177	0 - 1	0.001	±0.0001	5 - 10	0.000024	0.00008
103-131		0.0001				
103-178	1 - 2	0.001				
103-132		0.0001				
103-179	2 - 3	0.001				
103-180	3 - 4		±0.00015			0.00012
103-181	4 - 5					
103-182	5 - 6					
103-183	6 - 7		±0.0002			0.00016
103-184	7 - 8					
103-185	8 - 9					
103-186	9 - 10		±0.00025			
103-187	10 - 11					
103-188	11 - 12					0.0002
103-189	12 - 13		±0.0003	10 - 15	0.00004	
103-190	13 - 14					
103-191	14 - 15					
103-192	15 - 16		±0.00035			0.00024
103-193	16 - 17					
103-194	17 - 18					
103-195	18 - 19		±0.0004			0.00028
103-196	19 - 20					
103-197	20 - 21					
103-198	21 - 22		±0.00045			
103-199	22 - 23					
103-200	23 - 24					0.00032
103-201	24 - 25		±0.0005			
103-202	25 - 26					
103-203	26 - 27					
103-204	27 - 28		±0.00055			0.00036
103-205	28 - 29					
103-206	29 - 30					
103-207	30 - 31		±0.0006			
103-208	31 - 32					0.0004
103-209	32 - 33					
103-210	33 - 34		±0.00065			
103-211	34 - 35					
103-212	35 - 36					0.00044
103-213	36 - 37		±0.0007			
103-214	37 - 38					
103-215	38 - 39					
103-216	39 - 40		±0.00075			0.00048

Inch With friction thimble

Order No.	Range (in)	Graduation (in)	MPE*1 *2(in)	Measuring force (N)	Flatness (in)	Parallelism (in)
103-135	0 - 1	0.0001	±0.0001	5 - 10	0.000024	0.00008
103-136	1 - 2					

- Standard accessories: Setting standard, 1 pc. (except for measuring range 0 to 25 mm (0 to 1 in) models)- (**301336**), 1 pc. (for maximum measuring range up to 300 mm (12 in)), Spanner (**200154**), 1 pc. (for maximum measuring range 325 mm (13 in) or over)

*1 MPE: Maximum permissible error J_{MPE}

*2 Maximum permissible error of the indication measured by contacting the full measuring face with the object to be measured. J_{MPE} is a term specified by JIS B 7502: 2016 which has been prepared based on ISO 3611: 2010 with some modifications of the technical contents. The measurement method has not been changed from JIS B 7502: 1994. For details refer to page B-82.

Mitutoyo reserves the right to change any or all aspects of any product specification, including prices, designs and service content, without notice.

Outside Micrometers
SERIES 103

DIMENSIONS

103-137 and 103-138, Models 75 mm to 300 mm

Unit: mm

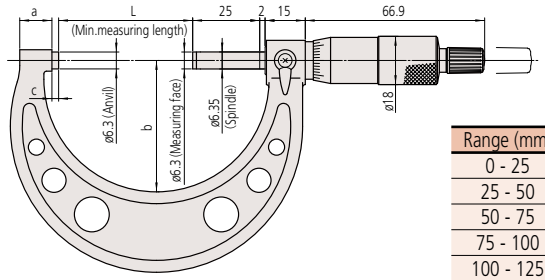

Range (mm)	L	a	b	c
0 - 25	0	9	28	2.5
25 - 50	25	10	38	
50 - 75	50	12	49	
75 - 100	75	14	60	
100 - 125	100	16.7	79	5.3
125 - 150	125	18.8	94	5.7
150 - 175	150	19.1	106	6.1
175 - 200	175	18.2	118	6.3
200 - 225	200	16.8	130	6.7
225 - 250	225	18	143	5.5
250 - 275	250		156	6.5
275 - 300	275		169	

DIMENSIONS

Models 325 mm to 1000 mm

Unit: mm

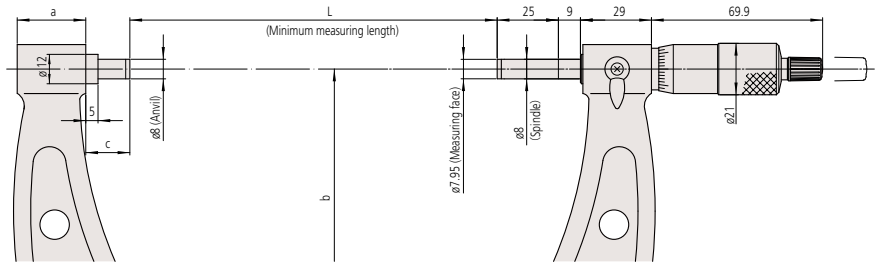

Range (mm)	L	a	b	c
300 - 325	300	28	187	18
325 - 350	325		199	
350 - 375	350		212	
375 - 400	375		224	
400 - 425	400		236	
425 - 450	425		248	
450 - 475	450		261	
475 - 500	475		273	
500 - 525	500		307	40
525 - 550	525			15
550 - 575	550		332	40
575 - 600	575			15
600 - 625	600		355	40
625 - 650	625			15

Range (mm)	L	a	b	c
650 - 675	650	28	382	40
675 - 700	675			15
700 - 725	700		405	40
725 - 750	725			15
750 - 775	750		430	40
775 - 800	775			15
800 - 825	800		455	40
825 - 850	825			15
850 - 875	850		480	40
875 - 900	875			15
900 - 925	900		505	40
925 - 950	925			15
950 - 975	950		530	40
975 - 1000	975			15

Mitutoyo reserves the right to change any or all aspects of any product specification, including prices, designs and service content, without notice.

Digit Outside Micrometers
SERIES 193

- Mechanical digit counter with 0.01 mm or 0.001 in resolution for quick and error-free reading.
- Measuring faces: Carbide.
- Equipped with Ratchet Stop for constant measuring force.



193-101

Measurement example



193-901
- Range: 0 - 75 mm
- Graduation: 0.001 mm
- Models included: **193-101**, **193-102**, **193-103**
  2 micrometer standards



193-902
- Range: 0 - 100 mm
- Graduation: 0.001 mm
- Models included: **193-101**, **193-102**, **193-103**, **193-104**
  3 micrometer standards

SPECIFICATIONS

Metric With ratchet stop

Order No.	Range (mm)	Maximum permissible error J_{MPE} (µm)	Flatness (µm)	Parallelism (µm)	Graduation (mm)
193-111	0 - 25	±2	0.6	2	0.001 (reading is obtained with vernier)
193-112	25 - 50				
193-113	50 - 75				
193-114	75 - 100	±3		3	
193-101	0 - 25	±2		2	0.01
193-102	25 - 50				
193-103	50 - 75				
193-104	75 - 100	±3		3	

Inch With friction thimble

Order No.	Range (in)	Maximum permissible error J_{MPE} (in)	Flatness (in)	Parallelism (in)	Graduation (in)
193-211	0 - 1	±0.0001	0.000024	0.00008	0.0001
193-212	1 - 2				

Inch With ratchet stop

Order No.	Range (in)	Maximum permissible error J_{MPE} (in)	Flatness (in)	Parallelism (in)	Graduation (in)
193-213	2 - 3	±0.0001	0.000024	0.00008	0.0001
193-214	3 - 4	±0.00015		0.00012	

Metric Micrometer set

Order No.	Range (mm)	Models included	Flatness (µm)	Parallelism (µm)
193-901	0 - 75 (3 pcs./set)	• **193-101, 193-102, 193-103** • 2 micrometer standards	0.6	2
193-902	0 - 100 (4 pcs./set)	• **193-101, 193-102, 193-103, 193-104** • 3 micrometer standards		3

Inch Micrometer set

Order No.	Range (in)	Models included	Flatness (in)	Parallelism (in)
193-923	0 - 3 (3 pcs./set)	• **193-211, 193-212, 193-213** • 2 micrometer standards	0.000024	0.00008

- Standard accessories: Setting standard, 1 pc. (except for measuring range 0 to 25 mm (0 to 1 in) models), Spanner (**301336**), 1 pc.

Mitutoyo reserves the right to change any or all aspects of any product specification, including prices, designs and service content, without notice.

Digit Outside Micrometers
SERIES 193

DIMENSIONS

Unit: mm

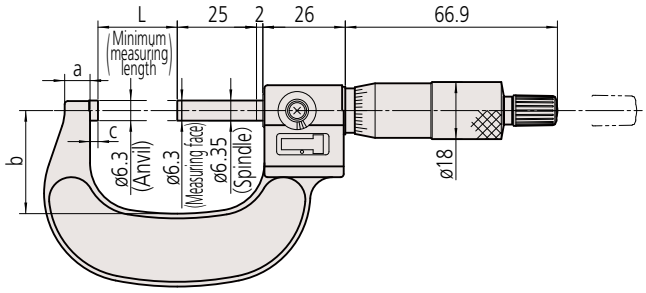

Range (mm)	L	a	b	c
0 - 25	0	5	26	2.5
25 - 50	25	8	32.5	2
50 - 75	50	9	45	
75 - 100	75		57	

DIMENSIONS

Unit: mm

193-211

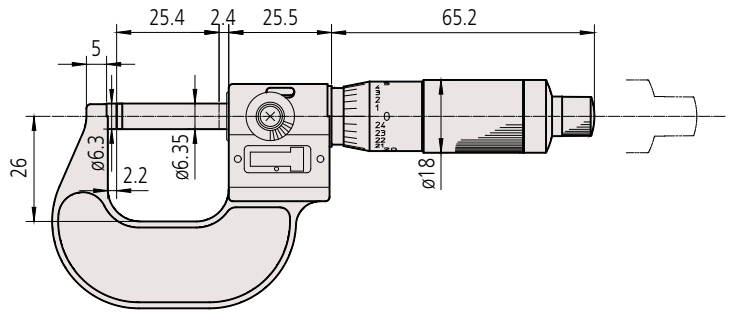

193-212

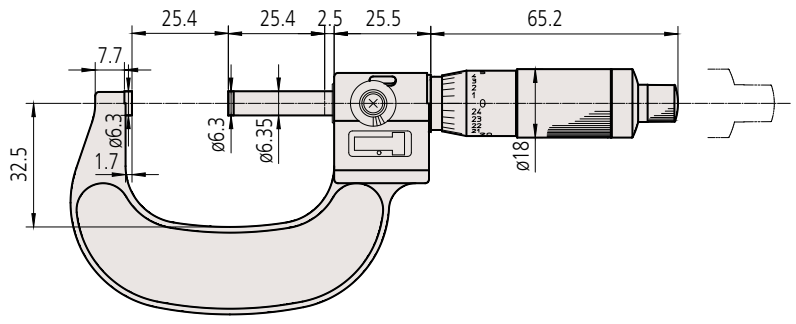

Mitutoyo reserves the right to change any or all aspects of any product specification, including prices, designs and service content, without notice.

MeasurLink® ENABLED Data Management Software by Mitutoyo

U-WAVE fit

Outside Micrometers
SERIES 406 — Non-Rotating Spindle Type

- The non-rotating spindle type does not apply rotational pressure to a measured object and is therefore suitable for measurement of soft materials and thin films.
- Measuring face of the spindle is carbide tipped.
- Spindle ø6.35 mm
- Equipped with Ratchet Stop for constant measuring force.



406-250-30

Measurement example



Optional Accessories

Order No.	Type	Description
05CZA662	B	Connecting cable (1 m)
05CZA663	B	Connecting cable (2 m)
06AFM380B	B	USB Input Tool Direct (2 m)
02AZD790B	B	Connecting cables for **U-WAVE-T** (160 mm)
02AZE140B	B	Connecting cables for **U-WAVE-T** For foot switch
264-622	IP67	**U-WAVE-TM**
264-623	Buzzer	**U-WAVE-TM**
264-626	IP67	**U-WAVE-TMB**
264-627	Buzzer	**U-WAVE-TMB**
02AZF310	IP67/ buzzer	Connecting unit for **U-WAVE-TM/TMB**

SPECIFICATIONS

Metric

Order No.	Range (mm)	Resolution (mm)	Maximum permissible error J_{MPE} (µm)	Flatness (µm)	Parallelism (µm)
406-250-30	0 - 25	0.001	±3	0.3	3
406-251-30	25 - 50				
406-252-30	50 - 75				
406-253-30	75 - 100		±4		4

Inch / Metric

Order No.	Range (in)	Resolution	Maximum permissible error J_{MPE} (in)	Flatness (in)	Parallelism (in)
406-350-30	0 - 1	0.00005 in/ 0.001 mm	±0.00015	0.000012	0.00012
406-351-30	1 - 2				
406-352-30	2 - 3				
406-353-30	3 - 4		±0.0002		0.00016

- Battery: SR44 (1 pc.), **938882**, for initial operational checks (standard accessory)
- Battery life: Approx. 2.4 years under normal use
- Length standard: Electromagnetic rotary sensor
- Standard accessories: Setting standard, 1 pc. (except for measuring range 0 to 25 mm (0 to 1 in) models)
  Spanner (**301336**), 1 pc.

Note: For functional details of **series 406**, refer to page B-7. Please note that these models are not water-proof.

DIMENSIONS

Unit: mm

Digimatic models up to 75 mm measuring range

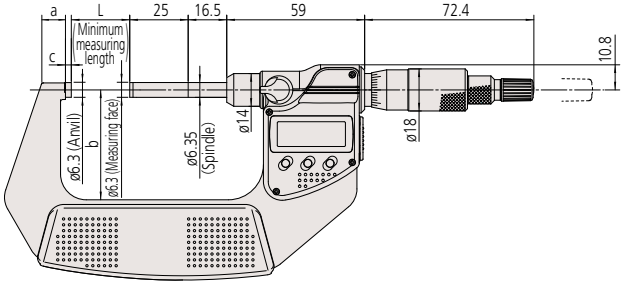

Digimatic models over 75 mm measuring range

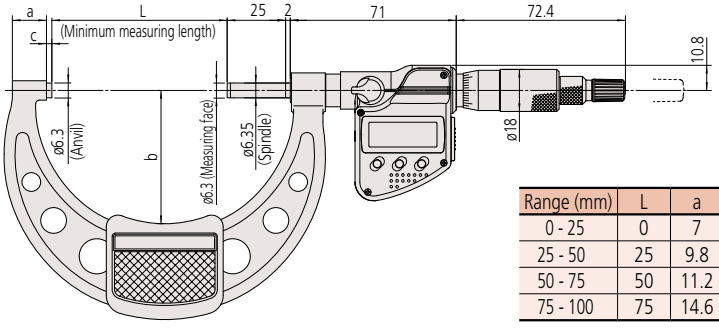

Range (mm)	L	a	b	c
0 - 25	0	7	32	2.8
25 - 50	25	9.8	47	
50 - 75	50	11.2	60	
75 - 100	75	14.6	57	2.3

Mitutoyo reserves the right to change any or all aspects of any product specification, including prices, designs and service content, without notice.

Indicator Type Micrometers
SERIES 107

- Designed to mount a dial indicator for direct GO/±NG judgment on mass-produced parts.
- Anvil retracting trigger for quick measurement.
- Various kinds of indicators* are selectable depending on the measurement type (accuracy required, measuring range, etc.).
- Measuring faces: Carbide.
- Anvil stroke: 3 mm.

* Indicators with stems cannot be installed on this micrometer.



107-201
(Indicator shown is optional)

Measurement example



Typical Indicator Choice

Dial indicator (0.01 mm)/**2046AB**
Dial indicator (0.001 mm)/**2109AB-10**
ABS Digimatic Indicator (0.01 mm)/**543-400B**
ABS Digimatic Indicator (0.001 mm)/**543-390B**

SPECIFICATIONS

Metric

Order No.	Range (mm)	Spindle feed error (µm)	Flatness (µm)	Parallelism (µm)
107-201	0 - 25	3	0.6	2
107-202	25 - 50			
107-203	50 - 75			
107-204	75 - 100			3
107-205	100 - 125			
107-206	125 - 150			
107-207	150 - 175			
107-208	175 - 200			4

• Setting standard, 1 pc. (except for measuring range 0 to 25 mm models), Spanner (**301336**), 1 pc.

DIMENSIONS

Unit: mm

Measuring range up to 50 mm

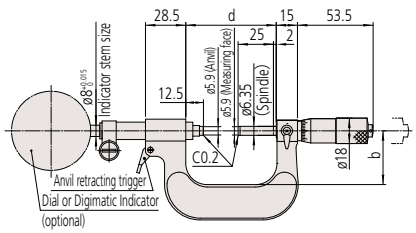

Measuring range up to 75 mm

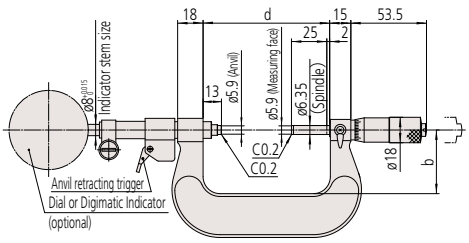

Measuring range up to 200 mm

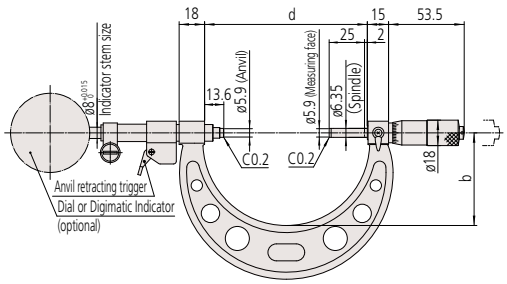

Range (mm)	b	d
0 - 25	30	39
25 - 50	38	64
50 - 75	45	89.5
75 - 100	65	115.1
100 - 125	79	140.1
125 - 150	93	165.1
150 - 175	105	190
175 - 200	118	214

Mitutoyo reserves the right to change any or all aspects of any product specification, including prices, designs and service content, without notice.

MeasurLink® ENABLED
Data Management Software by Mitutoyo

U-WAVE fit

IP65

Dust- and Water-Protected

Applicable models:
340-251-30, **340-252-30**, **340-351-30**, **340-352-30**

Measurement example

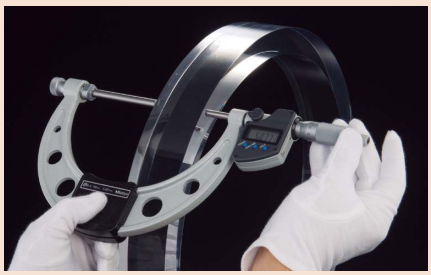

Optional Accessories

Order No.	Type	Description
05CZA662	B	Connecting cables for **340-251-30**, **340-252-30**, **340-351-30** and **340-352-30** (1 m)
05CZA663	B	Connecting cables for **340-251-30**, **340-252-30**, **340-351-30** and **340-352-30** (2 m)
06AFM380B	B	USB Input Tool Direct (2 m)
02AZD790B	B	Connecting cables for **U-WAVE-T** (160 mm)
02AZE140B	B	Connecting cables for **U-WAVE-T** For foot switch
264-622	IP67	**U-WAVE-TM***
264-623	Buzzer	**U-WAVE-TM***
264-626	IP67	**U-WAVE-TMB***
264-627	Buzzer	**U-WAVE-TMB***
02AZF310	IP67/ buzzer	Connecting unit for **U-WAVE-TM/TMB***
04AZB512	CR	Connecting cables (1 m) for **340-5XX**, **340-7XX**
04AZB513	CR	Connecting cables (2 m) for **340-5XX**, **340-7XX**
959149	C	Connecting cables (1 m) for **340-5XX**, **340-7XX**
959150	C	Connecting cables (2 m) for **340-5XX**, **340-7XX**

* Only **340-251-30**, **340-252-30**, **340-351-30** and **340-352-30** can be attached.

Outside Micrometers
SERIES 340 — with Interchangeable Anvils

- Wide measuring range with interchangeable anvils.
- Measuring face of the spindle is carbide tipped (standard model).
- IP 65 water/dust protection (**340-251-30**, **340-252-30**, **340-351-30**, **340-352-30**).
- Equipped with Ratchet Stop for constant measuring force.



340-251-30

SPECIFICATIONS

Metric

Order No.	Range (mm)	Resolution (mm)	Spindle feed error (µm)	Flatness (µm)	Parallelism (µm)	Interchangeable anvils	Setting Standard Qty	Setting Standard Size (mm)	Micrometer head stroke (mm)
Digimatic (LCD)									
340-251-30	0 - 75	0.001	3	0.6	2	6 pcs.	5	25 - 125	25
	75 - 150				3				
340-252-30	150 - 300				5		6	150 - 275	
340-520	300 - 400			1.0	6	4 pcs.	4	300 - 375	
340-521	400 - 500				7			400 - 475	
340-522	500 - 600				8			500 - 575	
340-523	600 - 700				9			600 - 675	
340-524	700 - 800				10			700 - 775	
340-525	800 - 900				11			800 - 875	
340-526	900 - 1000				12			900 - 975	

Inch / Metric

Order No.	Range (in)	Resolution	Spindle feed error (in)	Flatness (in)	Parallelism (in)	Interchangeable anvils	Setting Standard Qty	Setting Standard Size (in)	Micrometer head stroke (in)
Digimatic (LCD)									
340-351-30	0 - 6	0.00005 in/ 0.001 mm	0.00015	0.000024	0.00012	6 pcs.	5	1 - 5	1
340-352-30	6 - 12	0.0001 in/ 0.001 mm			0.0002		6	6 - 11	
340-720	12 - 18			0.00004	0.00026			12 - 17	
340-721	18 - 24				0.00032			18 - 23	
340-722	24 - 30				0.00038			24 - 29	
340-723	30 - 36				0.00044			30 - 35	

- Battery for **series 340**
  340-251-30, **340-252-30**, **340-351-30**, **340-352-30**: SR44 (1 pc.)
  340-520 to **340-526** **340-720** to **340-723**: SR44 (2 pcs.)
  938882, for initial operational checks (standard accessory)
- Battery life: Approx. 2.4 years under normal use (for **340-2XX**, **340-3XX**)
  Approx. 1.8 years under normal use (for **340-5XX**, **340-7XX**)
- Length standard: Electromagnetic rotary sensor (for **series 340**)
- Standard accessories: Spanner (**301336**), 1 pc.
  (for maximum measuring range up to 300 mm (12 in)), Spanner (**200154**), 1 pc.
  (for maximum measuring range 400 mm (16 in) or over)

Note 1: For functional details of **340-251-30**, **340-252-30**, **340-351-30**, **340-352-30**, refer to page B-7.
Please note that origin setting of these models is by presetting.
Optional connecting cable is available only for water-proof type (Digimatic model).
Note 2: For functional details of **340-520** to **340-723**, refer to page B-9.

Mitutoyo reserves the right to change any or all aspects of any product specification, including prices, designs and service content, without notice.

Mitutoyo

Outside Micrometers
SERIES 340 — with Interchangeable Anvils

DIMENSIONS

Over 400 mm up to 1000 mm Unit: mm

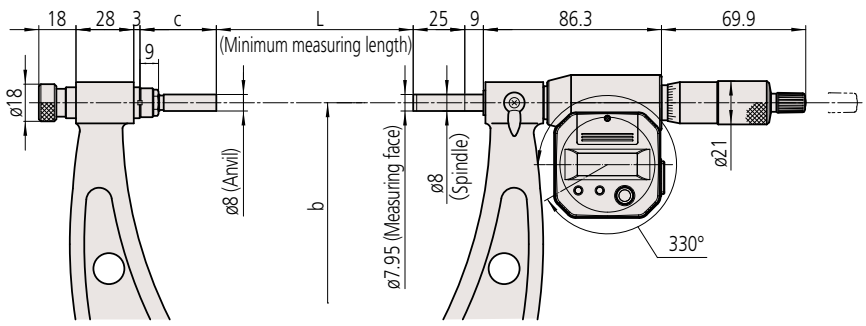

		L: Range (mm)				b
Range	300 - 400 mm models	300 - 325	325 - 350	350 - 375	375 - 400	224
Range	400 - 500 mm models	400 - 425	425 - 450	450 - 475	475 - 500	273
Range	500 - 600 mm models	500 - 525	525 - 550	550 - 575	575 - 600	332
Range	600 - 700 mm models	600 - 625	625 - 650	650 - 675	675 - 700	382
Range	700 - 800 mm models	700 - 725	725 - 750	750 - 775	775 - 800	430
Range	800 - 900 mm models	800 - 825	825 - 850	850 - 875	875 - 900	480
Range	900 - 1000 mm models	900 - 925	925 - 950	950 - 975	975 - 1000	530
	Order No.	**304001**	**304002**	**304003**	**304004**	
	c: Overall (mm)	87	62	37	12	
	Interchangeable anvil	M3	M4	M5	M6	

Mitutoyo reserves the right to change any or all aspects of any product specification, including prices, designs and service content, without notice.

Outside Micrometers
SERIES 104 — with Interchangeable Anvils

- Wide measuring range with interchangeable anvils.
- Measuring face of the spindle is carbide tipped (standard model).
- Equipped with Ratchet Stop for constant measuring force.



104-136

SPECIFICATIONS

Metric

Order No.	Range (mm)	Graduation (mm)	Spindle feed error (µm)	Flatnessr (µm)	Parallelism (µm)	Interchangeable anvils	Setting Standard Qty	Setting Standard Size (mm)	Micrometer head stroke (mm)
Analog									
104-171*	0 - 50	0.01	3	0.6	2	1 pc.	1	25	25
104-139A	0 - 100				3	4 pcs.	3	25 - 75	
104-135A	0 - 150					6 pcs.	5	25 - 125	
104-161A	50 - 150					4 pcs.	4	50 - 125	
104-140A	100 - 200				4			100 - 175	
104-136A	150 - 300				5	6 pcs.	6	150 - 275	
104-141A	200 - 300					4 pcs.	4	200 - 275	
104-142A	300 - 400			1.0	6			300 - 375	
104-143A	400 - 500				7			400 - 475	
104-144A	500 - 600				8			500 - 575	
104-145A	600 - 700				9			600 - 675	
104-146A	700 - 800				10			700 - 775	
104-147A	800 - 900				11			800 - 875	
104-148A	900 - 1000				12			900 - 975	

Inch

Order No.	Range (in)	Graduation (in)	Spindle feed error (in)	Flatness (in)	Parallelism (in)	Interchangeable anvils	Setting Standard Qty	Setting Standard Size (in)	Micrometer head stroke (in)
Analog									
104-165	0 - 2	0.0001	0.00015	0.000024	0.00008	1 pc.	1	1	1
104-149	0 - 4	0.001			0.00012	4 pcs.	3	1 - 3	
104-137	0 - 6					6 pcs.	5	1 - 5	
104-162	2 - 6					4 pcs.	4	2 - 5	
104-150	4 - 8				0.00016			4 - 7	
104-138	6 - 12				0.0002	6 pcs.	6	6 - 11	
104-151	8 - 12					4 pcs.	4	8 - 11	
104-152	12 - 16			0.00004	0.00024			12 - 15	
104-201	12 - 18					6 pcs.	6	12 - 17	
104-153	16 - 20				0.00028	4 pcs.	4	16 - 19	
104-202	18 - 24				0.00032	6 pcs.	6	18 - 23	
104-154	20 - 24					4 pcs.	4	20 - 23	
104-155	24 - 28				0.00036			24 - 27	
104-203	24 - 30					6 pcs.	6	24 - 29	
104-156	28 - 32				0.0004	4 pcs.	4	28 - 31	
104-204	30 - 36				0.00044	6 pcs.	6	30 - 35	
104-157	32 - 36					4 pcs.	4	32 - 35	
104-158	36 - 40				0.00048			36 - 39	
104-205	36 - 42					6 pcs.	6	36 - 41	

* The frame is fitted with a heat shield.

Mitutoyo reserves the right to change any or all aspects of any product specification, including prices, designs and service content, without notice.

Outside Micrometers
SERIES 104 — with Interchangeable Anvils

DIMENSIONS

B

Unit: mm

104-135A

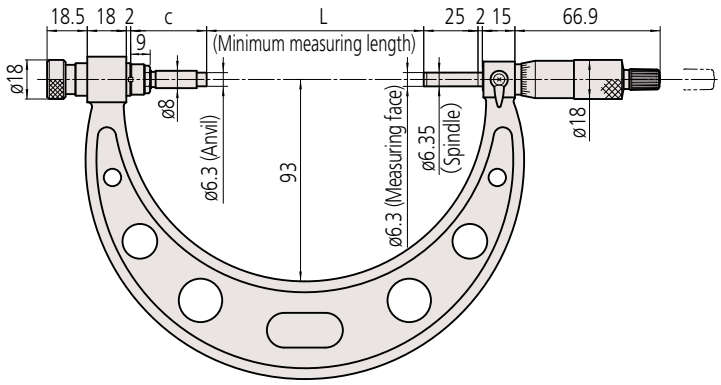

Interchangeable Anvil

		L: Range (mm)					
Range	0 - 150 mm models	0 - 25	25 - 50	50 - 75	75 - 100	100 - 125	125 - 150
Range	150 - 300 mm models	150 - 175	175 - 200	200 - 225	225 - 250	250 - 275	275 - 300
	Order No.	**303950**	**303951**	**303952**	**303953**	**303954**	**303955**
	c: Overall length (mm)	135	110	85	60	35	10
	Interchangeable anvil	M1	M2	M3	M4	M5	M6

		L: Range (mm)			
Range	300 - 400 mm models	300 - 325	325 - 350	350 - 375	375 - 400
Range	400 - 500 mm models	400 - 425	425 - 450	450 - 475	475 - 500
Range	500 - 600 mm models	500 - 525	525 - 550	550 - 575	575 - 600
Range	600 - 700 mm models	600 - 625	625 - 650	650 - 675	675 - 700
Range	700 - 800 mm models	700 - 725	725 - 750	750 - 775	775 - 800
Range	800 - 900 mm models	800 - 825	825 - 850	850 - 875	875 - 900
Range	900 - 1000 mm models	900 - 925	925 - 950	950 - 975	975 - 1000
	Order No.	**304001**	**304002**	**304003**	**304004**
	c: Overall length (mm)	87	62	37	12
	Interchangeable anvil	M3	M4	M5	M6

Mitutoyo reserves the right to change any or all aspects of any product specification, including prices, designs and service content, without notice.

Outside Micrometers
SERIES 105 — with Anvil Extension Collars

- Adjustable measuring range with extension collars.
- 50 mm/2 in spindle stroke.
- Measuring faces: Carbide.
- Equipped with Ratchet Stop for constant measuring force.



105-105

Extension collar



Measuring range 700 to 750 mm with **105-105**



Measuring range 750 to 800 mm with **105-105**

SPECIFICATIONS

Metric

Order No.	Range (mm)	Graduation (mm)	Extension Collars	Setting Standard	Spindle feed error (µm)	Flatness (µm)	Parallelism (µm)
105-103	500 - 600	0.01	1 pc. (50 mm)	2 pcs.	6	1.3	8
105-104	600 - 700						9
105-105	700 - 800						10
105-106	800 - 900						11
105-107	900 - 1000						12

- Standard Accessories: Spanner (**200154**), 1 pc.

Mitutoyo reserves the right to change any or all aspects of any product specification, including prices, designs and service content, without notice.

Outside Micrometers
SERIES 105 — with Anvil Extension Collars

- Large, lightweight micrometer with excellent strength based on a pipe-structure frame made of a combination of square and round pipes.
- Wide measuring range with anvil extension collars.
- 50 mm/2 in spindle stroke.
- Measuring faces: Carbide.
- Equipped with Ratchet Stop for constant measuring force.

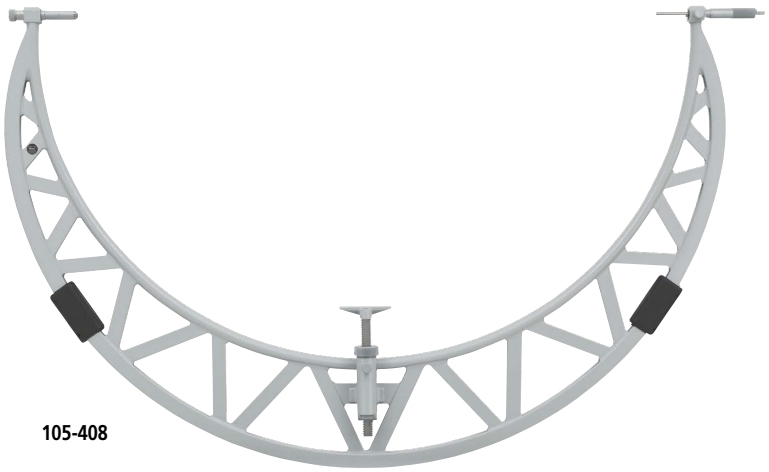

105-408

Measurement example







SPECIFICATIONS

Metric

Order No.	Range (mm)	Graduation (mm)	Extension Collars	Setting Standard (pcs.)	Spindle feed error (µm)	Flatness (µm)	Parallelism (µm)
(every 100 mm)							
105-408	1000 - 1100	0.01	1 pc. (50 mm)	2	6	1.3	13
105-409	1100 - 1200						14
105-410	1200 - 1300						15
105-411	1300 - 1400						16
105-412	1400 - 1500						17
105-413	1500 - 1600						18
105-414	1600 - 1700						19
105-415	1700 - 1800						20
105-416	1800 - 1900						21
105-417	1900 - 2000						22
(every 200 mm)							
105-418	1000 - 1200	0.01	2 pcs. (50 mm, 100 mm)	4 (every 50 mm)	6	1.3	14
105-419	1200 - 1400						16
105-420	1400 - 1600						18
105-421	1600 - 1800						20
105-422	1800 - 2000						22

Inch

Order No.	Range (in)	Graduation (in)	Extension Collars	Setting Standard (pcs.)	Spindle feed error (in)	Flatness (in)	Parallelism (in)
105-428	40 - 44	0.001	1 pc. (2 in)	2	0.0003	0.000052	0.00052
105-429	44 - 48						0.00056
105-430	48 - 52						0.00060
105-431	52 - 56						0.00063
105-432	56 - 60						0.00067
105-433	60 - 64						0.00071
105-434	64 - 68						0.00075
105-435	68 - 72						0.00079
105-436	72 - 76						0.00083
105-437	76 - 80						0.00087

- Standard Accessories: Spanner (**200154**), 1 pc.

Mitutoyo reserves the right to change any or all aspects of any product specification, including prices, designs and service content, without notice.

DIMENSIONS

Over 1200 mm up to 2000 mm

Unit: mm

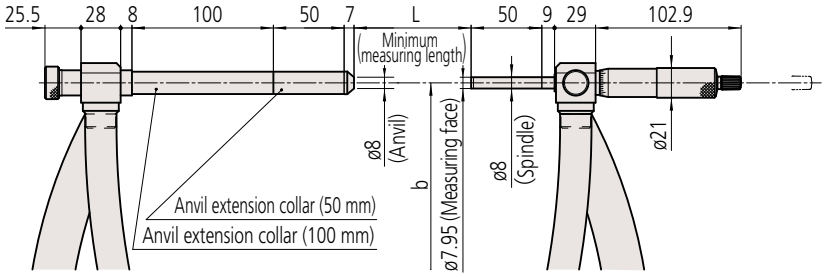

b: distance to workpiece stop

Range (mm)	L	b
1000 - 1200	1000	500 - 600
1200 - 1400	1200	600 - 700
1400 - 1600	1400	700 - 800
1600 - 1800	1600	800 - 900
1800 - 2000	1800	900 - 1000

Mitutoyo reserves the right to change any or all aspects of any product specification, including prices, designs and service content, without notice.

MeasurLink® ENABLED
Data Management Software by Mitutoyo

U-WAVE fit

Caliper Type Micrometers SERIES 343

- Effective for measuring workpiece features where access is difficult.
- Measuring faces: Carbide.
- Equipped with Ratchet Stop for constant measuring force.



343-250-30

Measurement example



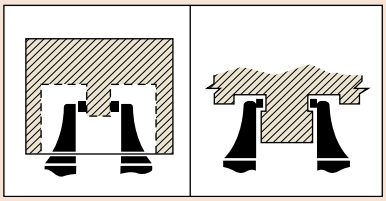

SPECIFICATIONS

Metric

Order No.	Range (mm)	Resolution (mm)	Maximum permissible error J_{MPE} (µm)	Flatness (µm)	Parallelism (µm)
Digimatic (LCD)					
343-250-30	0 - 25	0.001	±5	0.3	3
343-251-30	25 - 50		±6		
343-252-30	50 - 75		±7		4
343-253-30	75 - 100		±8		

Inch / Metric

Order No.	Range (in)	Graduation (in)	Maximum permissible error J_{MPE} (in)	Flatness (in)	Parallelism (in)
Digimatic (LCD)					
343-350-30	0 - 1	0.00005 in/ 0.001 mm	±0.00025	0.000012	0.00012
343-351-30	1 - 2		±0.0003		
343-352-30	2 - 3		±0.00035		0.00016
343-353-30	3 - 4		±0.0004		

- Battery: SR44 (1 pc.), **938882**, for initial operational checks (standard accessory)
- Battery life: Approx. 2.4 years under normal use
- Length standard: Electromagnetic rotary sensor
- Standard accessories: Setting standard, 1 pc. (except for measuring range 0 to 25 mm (0 to 1 in) models), Spanner (**301336**), 1 pc.

Note: For functional details of **series 343**, refer to page B-7.
Please note that these models are not water-proof.

DIMENSIONS

Digimatic
Measuring range up to 100 mm

Unit: mm

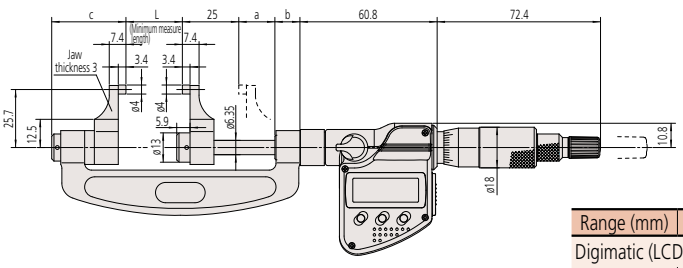

Range (mm)	L	a	b	C
Digimatic (LCD)				
0 - 25	0	16	11.1	32.9
25 - 50	25			
50 - 75	50			
75 - 100	75			

Optional Accessories (for series 343)

Order No.	Type	Description
05CZA662	B	Connecting cable (1 m)
05CZA663	B	Connecting cable (2 m)
06AFM380B	B	USB Input Tool Direct (2 m)
02AZD790B	B	Connecting cables for **U-WAVE-T** (160 mm)
02AZE140B	B	Connecting cables for **U-WAVE-T** For foot switch
264-622	IP67	**U-WAVE-TM**
264-623	Buzzer	**U-WAVE-TM**
264-626	IP67	**U-WAVE-TMB**
264-627	Buzzer	**U-WAVE-TMB**
02AZF310	IP67/ buzzer	Connecting unit for **U-WAVE-TM/TMB**

Mitutoyo reserves the right to change any or all aspects of any product specification, including prices, designs and service content, without notice.

Caliper Type Micrometers
SERIES 143



143-101

SPECIFICATIONS

Metric

Order No.	Range (mm)	Graduation (mm)	Maximum permissible error J_{MPE} (µm)	Flatness (µm)	Parallelism (µm)
Analog					
143-101	0 - 25	0.01	±5	0.3	3
143-102	25 - 50		±6		
143-103	50 - 75		±7		4
143-104	75 - 100		±8		
143-105	100 - 125		±9		
143-106	125 - 150				5
143-107	150 - 175		±10		
143-108	175 - 200				
143-109	200 - 225		±11		6
143-110	225 - 250				
143-111	250 - 275		±12		
143-112	275 - 300				7

Inch

Order No.	Range (in)	Graduation (in)	Maximum permissible error J_{MPE} (in)	Flatness (in)	Parallelism (in)
Analog					
143-121	0 - 1	0.001	±0.00025	0.000012	0.00012
143-122	1 - 2		±0.0003		
143-123	2 - 3		±0.00035		

• Standard accessories: Setting standard, 1 pc. (except for measuring range 0 to 25 mm (0 to 1 in) models), Spanner (**301336**), 1 pc.
Note: Please note that these models are not water-proof.

DIMENSIONS

Analog
Measuring range up to 300 mm

Unit: mm

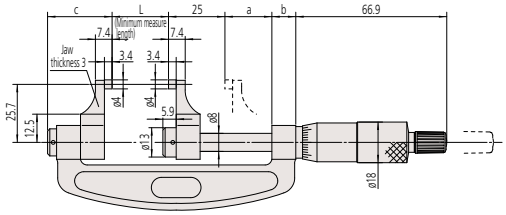

Range (mm)	L	a	b	C
Analog				
0 - 25	0	20.8	10.6	28.6
25 - 50	25			
50 - 75	50			
75 - 100	75			
100 - 125	100			
125 - 150	125			
150 - 175	150			
175 - 200	175			
200 - 225	200	16.3	15	32.5
225 - 250	225			
250 - 275	250			
275 - 300	275			

Mitutoyo reserves the right to change any or all aspects of any product specification, including prices, designs and service content, without notice.

Mitutoyo

Screw Thread Micrometers SERIES 125

- Fitted with one type of anvil/spindle tip for screw thread measurement.
- The measurement result is directly readable (no need for calculation).
- Equipped with Ratchet Stop for constant measuring force.
- Fixed anvil type to suit 60° threads.



125-103

Measurement example



SPECIFICATIONS

Metric

Order No.	Thread to be measured (Metric/Unified)	Range (mm)	Graduation (mm)	Spindle feed error (µm)
125-101	0.4 - 0.5 mm/64 - 48 TPI	0 - 25	0.01	3
125-102	0.6 - 0.9 mm/44 - 28 TPI			
125-103	1 - 1.75 mm/24 - 14 TPI			
125-104	2 - 3 mm/13 - 9 TPI			
125-105	3.5 - 5 mm/8 - 5 TPI			
125-106	0.4 - 0.5 mm/64 - 48 TPI	25 - 50		
125-107	0.6 - 0.9 mm/44 - 28 TPI			
125-108	1 - 1.75 mm/24 - 14 TPI			
125-109	2 - 3 mm/13 - 9 TPI			
125-110	3.5 - 5 mm/8 - 5 TPI			
125-111	0.6 - 0.9 mm/44 - 28 TPI	50 - 75		
125-112	1 - 1.75 mm/24 - 14 TPI			
125-113	2 - 3 mm/13 - 9 TPI			
125-114	3.5 - 5 mm/8 - 5 TPI			
125-115	5.5 - 7 mm/4.5 - 3.5 TPI			
125-116	0.6 - 0.9 mm/44 - 28 TPI	75 - 100		
125-117	1 - 1.75 mm/24 - 14 TPI			
125-118	2 - 3 mm/13 - 9 TPI			
125-119	3.5 - 5 mm/8 - 5 TPI			
125-120	5.5 - 7 mm/4.5 - 3.5 TPI			

• Standard Accessories: Spanner (**301336**), 1 pc.

Note: A matching setting standard is supplied with each model (except for 0 to 25 mm measuring range). (Refer to page B-70 for details.) The setting standard is for metric threads (unified) 60°.

DIMENSIONS

125-101, 125-106

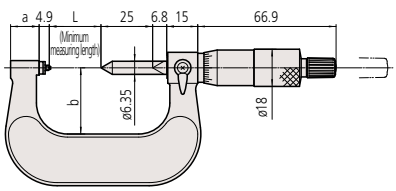

Range (mm)	L	a	b
0 - 25	0	13.8	25
25 - 50	25		32

125-111, 125-116

Unit: mm

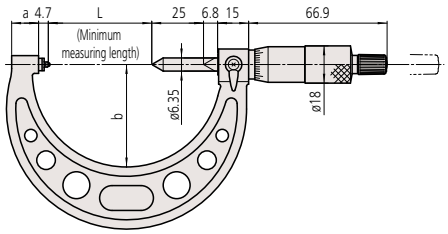

Range (mm)	L	a	b
50 - 75	50	12	49
75 - 100	75	14	63

Mitutoyo reserves the right to change any or all aspects of any product specification, including prices, designs and service content, without notice.

MeasurLink® ENABLED
Data Management Software by Mitutoyo

U-WAVE fit

IP65

TÜVRheinland CERTIFIED
Dust- and Water-Protected
www.tuv.com ID 0000040191

Applicable models: **series 326**

Screw Thread Micrometers
SERIES 326, 126 — Interchangeable Anvil/Spindle Tip Type

- Use by installing a suitable interchangeable anvil/spindle tip pair.
- Direct reading of screw pitch diameter (no need for calculation).
- **Series 326** is a protection grade IP65, waterproof Digimatic screw thread micrometer with interchangeable anvil/spindle tip.
- Equipped with Ratchet Stop for constant measuring force.
- Supplied with a setting standard for adjusting zero point for metric (unified) 60° threads.
- Interchangeable anvils/spindle tips are optional.

Measurement example



Interchangeable anvils/spindle tips (optional)



326-251-30



SPECIFICATIONS

Metric

Order No.	Range (mm)	Resolution (mm)	Spindle feed error (µm)
Digimatic (LCD)			
326-251-30	0 - 25	0.001	3
326-252-30	25 - 50		
326-253-30	50 - 75		
326-254-30	75 - 100		

Inch/Metric

Order No.	Range (in)	Resolution	Spindle feed error (in)
Digimatic (LCD)			
326-351-30	0 - 1	0.00005 in/ 0.001 mm	0.00015
326-352-30	1 - 2		
326-353-30	2 - 3		
326-354-30	3 - 4		

- Battery: SR44 (1 pc.), **938882**, for initial operational checks (standard accessory)
- Battery life: Approx. 2.4 years under normal use
- Length standard: Electromagnetic rotary sensor
- Standard Accessories: Spanner (**301336**), 1 pc.

Note 1: A matching setting standard is supplied with each model (except for 0 to 25 mm measuring range). (Refer to page B-70 for details.) The setting standard is for metric threads (unified) 60°.

Note 2: For functional details, refer to page B-7. Please note that origin setting of these models is by presetting. Optional connecting cable is available only for water-proof type (Digimatic model).



126-125

SPECIFICATIONS

Metric

Order No.	Range (mm)	Graduation (mm)	Spindle feed error (µm)
Analog			
126-125	0 - 25	0.01	3
126-126	25 - 50		
126-127	50 - 75		
126-128	75 - 100		
126-129	100 - 125		
126-130	125 - 150		
126-131	150 - 175		
126-132	175 - 200		
126-133	200 - 225		
126-134	225 - 250		
126-135	250 - 275		
126-136	275 - 300		

Inch

Order No.	Range (in)	Graduation (in)	Spindle feed error (in)
Analog			
126-137	0 - 1	0.001	0.00015
126-138	1 - 2		
126-139	2 - 3		
126-140	3 - 4		
126-141	4 - 5		
126-142	5 - 6		
126-143	6 - 7		

- Standard Accessories: Spanner (**301336**), 1 pc.

Note: A matching setting standard is supplied with each model (except for 0 to 25 mm measuring range). (Refer to page B-70 for details.) The setting standard is for metric threads (unified) 60°.

Optional Accessories (for series 326)

Order No.	Type	Description
05CZA662	B	Connecting cable (1 m)
05CZA663	B	Connecting cable (2 m)
06AFM380B	B	USB Input Tool Direct (2 m)
02AZD790B	B	Connecting cables for **U-WAVE-T** (160 mm)
02AZE140B	B	Connecting cables for **U-WAVE-T** For foot switch
264-622	IP67	**U-WAVE-TM**
264-623	Buzzer	**U-WAVE-TM**
264-626	IP67	**U-WAVE-TMB**
264-627	Buzzer	**U-WAVE-TMB**
02AZF310	IP67/ buzzer	Connecting unit for **U-WAVE-TM/TMB**

- For Metric/Unified threads (pair)

Order No.	Matching anvils/spindle tips included (mm)
126-801	0.4 - 0.5/64 - 48 TPI
126-802	0.6 - 0.9/44 - 28 TPI
126-803	1 - 1.75/24 - 14 TPI
126-804	2 - 3/13 - 9 TPI
126-805	3.5 - 5/8 - 5 TPI
126-806	5.5 - 7/4.5 - 3.5 TPI
126-800	Set with one each of **126-801** to **126-806**

- For Whitworth threads (pair)

Order No.	Matching anvils/ spindle tips included (mm)
126-811	64 - 48 TPI
126-812	48 - 40 TPI
126-813	40 - 32 TPI
126-814	32 - 24 TPI
126-815	24 - 18 TPI
126-816	18 - 14 TPI

Order No.	Matching anvils/ spindle tips included (mm)
126-817	14 - 10 TPI
126-818	10 - 7 TPI
126-819	7 - 4.5 TPI
126-820	4.5 - 3.5 TPI
126-810	Set with one each of **126-811** to **126-820**

Mitutoyo reserves the right to change any or all aspects of any product specification, including prices, designs and service content, without notice.

Mitutoyo

Screw Thread Micrometers
SERIES 326, 126 — Interchangeable Anvil/Spindle Tip Type

DIMENSIONS

Unit: mm

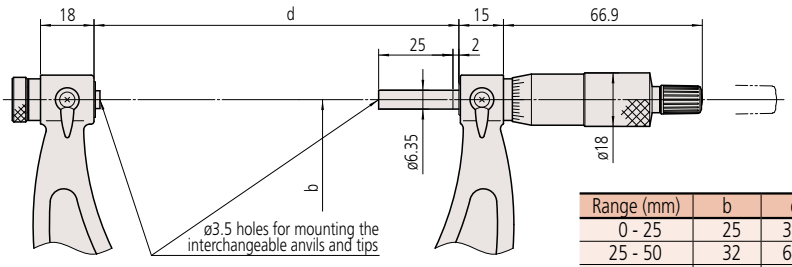

Range (mm)	b	d
0 - 25	25	39
25 - 50	32	64
50 - 75	45	89.5
75 - 100	65	115.1
100 - 125	79	140.1
125 - 150	93	165.1
150 - 175	105	190
175 - 200	118	214
200 - 225	131	240
225 - 250	144	265
250 - 275	156	290
275 - 300	169	314

Technical description

- Anvils/spindle tips

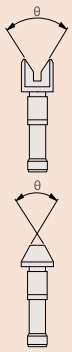

- Allowable error of the angle of anvils and spindle tips

Type	Metric (Unified)	Whitworth (Unified)	Half angle error α
Pitch (mm), Nominal designation of threads per inch		W1	±30'
	M1 (U1)	W2	±30'
		W3	±20'
	M2 (U2)	W4	±20'
		W5	±15'
	M3 (U3)	W6	±15'
	M4 (U4)	W7	±10'
		W8	±10'
	M5 (U5)	W9	±10'
	M6 (U6)	W10	±10'

Note: This chart indicates the difference between the angle made by anvil's contact faces and spindle's axes and the half angle with error α.
Metric/Unified θ=60°
Whitworth θ=55°

Mitutoyo reserves the right to change any or all aspects of any product specification, including prices, designs and service content, without notice.

Paper Thickness Micrometers
SERIES 169 — Non-Rotating Spindle Type

- For paper thickness measurement.
- Non-rotating spindle.
- Anvil diameter 14.3 mm (without recess)
- Equipped with Ratchet Stop for constant measuring force. (8.02±0.8 N)

Measurement example





169-101-10

SPECIFICATIONS

Metric

Order No.	Range (mm)	Graduation (mm)	Maximum permissible error J_{MPE} (µm)	Flatness (µm)	Parallelism (µm)
169-101-10	0 - 25	0.01	±4	1	3

Inch

Order No.	Range (in)	Graduation (in)	Maximum permissible error J_{MPE} (in)	Flatness (in)	Parallelism (in)
169-103-10	0 - 1	0.001	±0.0002	0.00004	0.00015

- Standard Accessories: Spanner (**301336**), 1 pc.

DIMENSIONS

Unit: mm

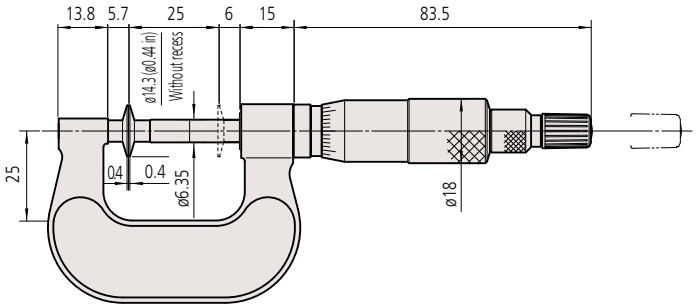

( ): inch model

Mitutoyo reserves the right to change any or all aspects of any product specification, including prices, designs and service content, without notice.

MeasurLink ENABLED Data Management Software by Mitutoyo

U-WAVE fit

IP65 Dust- and Water-Protected TÜVRheinland CERTIFIED www.tuv.com ID 0000040191

Disk Micrometers SERIES 323

- Measures "root tangent length" of spur gears and helical gears.
- Determination of the root tangent length: refer to "Quick Guide to Precision Measuring Instruments" on page B-80.
- Equipped with Ratchet Stop for constant measuring force.
- Supplied with a setting standard (except for 0 to 25 mm/0 to 1 in measuring range).



323-250-30

Measurement example



SPECIFICATIONS

Metric

Order No.	Range (mm)	Resolution (mm)	Maximum permissible error J_{MPE} (µm)	Flatness (µm)	Parallelism (µm)	Anvil dia. (mm)	Measurable module
Digimatic (LCD)							
323-250-30	0 - 25	0.001	±4	1	4	ø20	0.5 - 6
323-251-30	25 - 50						
323-252-30	50 - 75		±6		6		
323-253-30	75 - 100						

Inch / Metric

Order No.	Range (in)	Resolution	Maximum permissible error J_{MPE} (in)	Flatness (in)	Parallelism (in)	Anvil dia. (in)	Measurable module
Digimatic (LCD)							
323-350-30	0 - 1	0.00005 in/ 0.001 mm	±0.0002	0.00004	0.0002	0.787	0.5 - 6
323-351-30	1 - 2						
323-352-30	2 - 3		±0.0003		0.0003		
323-353-30	3 - 4						

- Battery: SR44 (1 pc.), **938882**, for initial operational checks (standard accessory)
- Battery life: Approx. 2.4 years under normal use
- Length standard: Electromagnetic rotary sensor
- Standard accessories: Setting standard, 1 pc. (except for measuring range 0 to 25 mm (0 to 1 in) models), Spanner (**301336**), 1 pc.

Note 1: Root tangent length measurement is not available for some types of gears.
Note 2: For functional details, refer to page B-7.
Optional connecting cable is available only for water-proof type (Digimatic model).

Optional Accessories

Order No.	Type	Description
05CZA662	B	Connecting cable (1 m)
05CZA663	B	Connecting cable (2 m)
06AFM380B	B	USB Input Tool Direct (2 m)
02AZD790B	B	Connecting cables for **U-WAVE-T** (160 mm)
02AZE140B	B	Connecting cables for **U-WAVE-T** For foot switch
264-622	IP67	**U-WAVE-TM**
264-623	Buzzer	**U-WAVE-TM**
264-626	IP67	**U-WAVE-TMB**
264-627	Buzzer	**U-WAVE-TMB**
02AZF310	IP67/ buzzer	Connecting unit for **U-WAVE-TM/TMB**

DIMENSIONS

Digimatic models up to 75 mm measuring range

Unit: mm

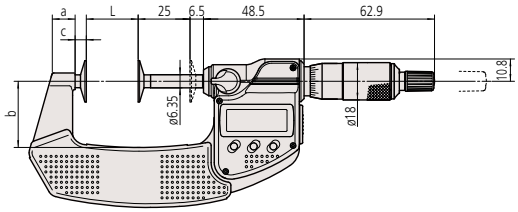

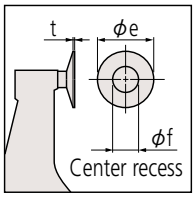

Digimatic models up to 100 mm measuring range

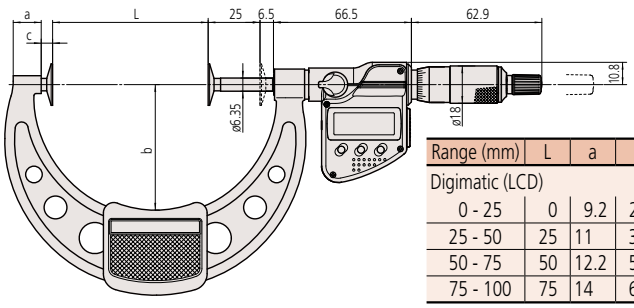

Range (mm)	L	a	b	c	e	f	t
Digimatic (LCD)							
0 - 25	0	9.2	25	4.5	20	8	0.7
25 - 50	25	11	31	5.4			
50 - 75	50	12.2	50	5.5			
75 - 100	75	14	60				

Mitutoyo reserves the right to change any or all aspects of any product specification, including prices, designs and service content, without notice.

Disk Micrometers
SERIES 223, 123

- Measures "root tangent length" of spur gears and helical gears.
- Determination of the root tangent length: refer to "Quick Guide to Precision Measuring Instruments" on page B-80.
- Equipped with Ratchet Stop for constant measuring force.
- Supplied with a setting standard (except for 0 to 25 mm/0 to 1 in measuring range).



123-101

SPECIFICATIONS

Metric

Order No.	Range (mm)	Graduation (mm)	Maximum permissible error J_{MPE} (µm)	Flatness (µm)	Parallelism (µm)	Anvil dia. (mm)	Measurable module
Mechanical counter model							
223-101	0 - 25	0.01	±4	1	4	ø20	0.5 - 6
223-102	25 - 50						
Analog							
123-101	0 - 25	0.01	±4	1	4	ø20	0.5 - 6
123-113*							
123-102	25 - 50						
123-114*							
123-103	50 - 75		±6		6		
123-115*							
123-104	75 - 100						
123-116*							
123-105	100 - 125		±7	1.6	7	ø30	0.7 - 11
123-106	125 - 150						
123-107	150 - 175		±8		8		
123-108	175 - 200						
123-109	200 - 225						
123-110	225 - 250		±9		9		
123-111	250 - 275						
123-112	275 - 300						

Inch

Order No.	Range (in)	Graduation (in)	Maximum permissible error J_{MPE} (in)	Flatness (in)	Parallelism (in)	Anvil dia. (in)	Measurable module
Mechanical counter model							
223-125	0 - 1	0.001	±0.0002	0.00004	0.0002	0.787	0.5 - 6
Analog							
123-125	0 - 1	0.001	±0.0002	0.00004	0.0002	0.787	0.5 - 6
123-126	1 - 2						
123-127	2 - 3		±0.0003		0.0003		
123-128	3 - 4						

* The measuring disks have carbide tips.
• Standard accessories: Setting standard, 1 pc. (except for measuring range 0 to 25 mm (0 to 1 in) models), Spanner (**301336**), 1 pc.
Note: Root tangent length measurement is not available for some types of gears.

Mitutoyo reserves the right to change any or all aspects of any product specification, including prices, designs and service content, without notice.

Disk Micrometers
SERIES 223, 123

DIMENSIONS

B

Analog models up to 50 mm measuring range

Unit: mm

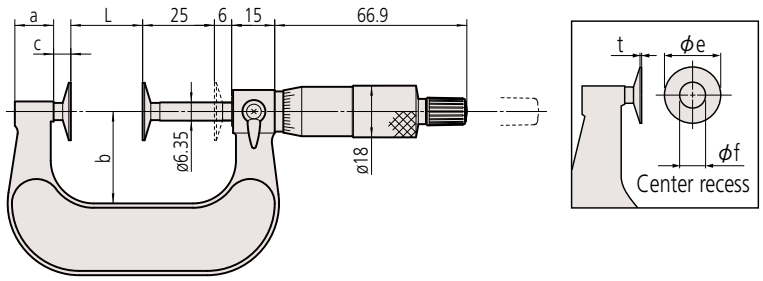

Analog models over 50 mm measuring range

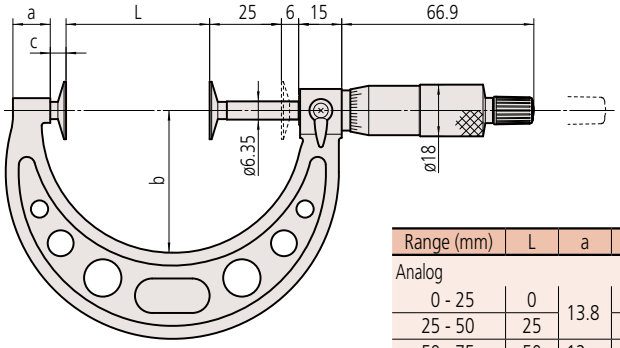

Range (mm)	L	a	b	c	e	f	t
Analog							
0 - 25	0	13.8	25	5.7	20	8 (9.8)	0.7 (0.7)
25 - 50	25		32				
50 - 75	50	12	49	5.5			
75 - 100	75	14	63				
100 - 125	100	12	79	6	30	12	1
125 - 150	125	14.5	94				
150 - 175	150	15.2	106				
175 - 200	175	14.5	118				
200 - 225	200	13.5	130				
225 - 250	225		143				
250 - 275	250	14.5	156				
275 - 300	275		169				

Note: Data in ( ) applies to those with carbide-faced disks.

Mitutoyo reserves the right to change any or all aspects of any product specification, including prices, designs and service content, without notice.

MeasurLink® ENABLED
Data Management Software by Mitutoyo

U-WAVE fit

IP65

Dust- and Water-Protected
TÜVRheinland CERTIFIED
www.tuv.com ID 0000040191

Measurement example

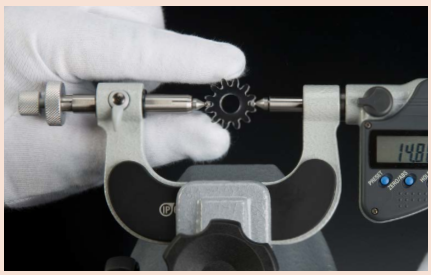

Optional Accessories

Order No.	Type	Description
05CZA662	B	Connecting cable (1 m)
05CZA663	B	Connecting cable (2 m)
06AFM380B	B	USB Input Tool Direct (2 m)
02AZD790B	B	Connecting cables for **U-WAVE-T** (160 mm)
02AZE140B	B	Connecting cables for **U-WAVE-T** For foot switch
264-622	IP67	**U-WAVE-TM**
264-623	Buzzer	**U-WAVE-TM**
264-626	IP67	**U-WAVE-TMB**
264-627	Buzzer	**U-WAVE-TMB**
02AZF310	IP67/ buzzer	Connecting unit for **U-WAVE-TM/TMB**

Gear Tooth Micrometers
SERIES 324 — Interchangeable Ball Anvil/Spindle Tip Type

- Measures over-pin diameter of gears using precision steel (or carbide) ball anvils/ spindle tips.
- IP65 Digimatic gear tooth micrometers.
- Determination of the over-pin diameter: refer to "Quick Guide to Precision Measuring Instruments" on page B-80.
- Interchangeable ball anvils/spindle tips for various gear modules (0.5 to 5.25) are optional.
- Ball anvil/spindle tips: optional.



324-251-30

SPECIFICATIONS

Metric

Order No.	Range (mm)	Resolution (mm)	Spindle feed error (µm)
Digimatic (LCD)			
324-251-30	0 - 25	0.001	3
324-252-30	25 - 50		
324-253-30	50 - 75		
324-254-30	75 - 100		

Inch/Metric

Order No.	Range (in)	Resolution	Spindle feed error (in)
Digimatic (LCD)			
324-351-30	0 - 1	0.00005 in/ 0.001 mm	0.00015
324-352-30	1 - 2		
324-353-30	2 - 3		
324-354-30	3 - 4		

- Battery: SR44 (1 pc.), **938882**, for initial operational checks (standard accessory)
- Battery life: Approx. 2.4 years under normal use
- Length standard: Electromagnetic rotary sensor
- Standard accessories: Setting standard, 1 pc. (except for measuring range 0 to 25 mm (0 to 1 in) models), Spanner (**301336**), 1 pc.

Note: For functional details, refer to page B-7.
Please note that origin setting of these models is by presetting. Optional connecting cable is available only for water-proof type (Digimatic model).

DIMENSIONS

Digimatic models up to 50 mm

Unit: mm

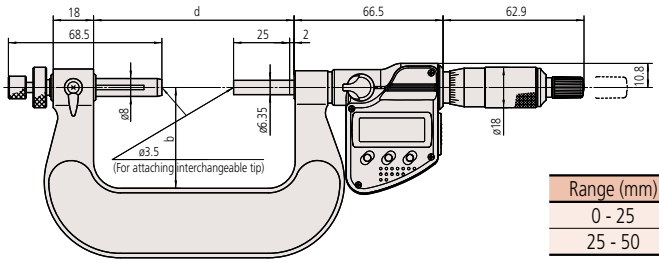

Range (mm)	b	d
0 - 25	32	64
25 - 50	45	89.5

Digimatic models over 50 mm up to 100 mm

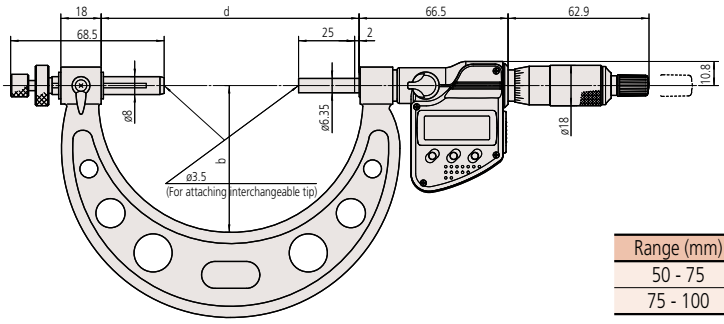

Range (mm)	b	d
50 - 75	65	115.1
75 - 100	79	140.1

Mitutoyo reserves the right to change any or all aspects of any product specification, including prices, designs and service content, without notice.

Mitutoyo

B

Gear Tooth Micrometers
SERIES 124 — Interchangeable Ball Anvil/Spindle Tip Type

- Measures over-pin diameter of gears using precision steel (or carbide) ball anvils/spindle tips.
- Determination of the over-pin diameter: refer to "Quick Guide to Precision Measuring Instruments" on page B-80.
- Interchangeable ball anvils/spindle tips for various gear modules (0.5 to 5.25) are optional.
- Equipped with Ratchet Stop for constant measuring force.
- Ball anvil/spindle tips: optional.



124-173

SPECIFICATIONS

Metric

Order No.	Range (mm)	Graduation (mm)	Spindle feed error (µm)
Analog			
124-173	0 - 25	0.01	3
124-174	25 - 50		
124-175	50 - 75		
124-176	75 - 100		
124-177	100 - 125		
124-178	125 - 150		
124-179	150 - 175		
124-180	175 - 200		
124-181	200 - 225		
124-182	225 - 250		
124-183	250 - 275		
124-195	275 - 300		

- Standard accessories: Setting standard, 1 pc. (except for measuring range 0 to 25 mm models), Spanner (**301336**), 1 pc.

DIMENSIONS

Analog models up to 50 mm

Unit: mm

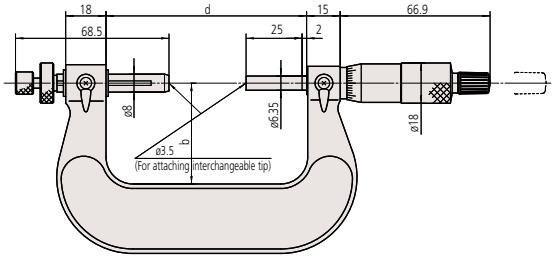

Range (mm)	b	d
0 - 25	32	64
25 - 50	45	89.5

Analog models over 50 mm up to 300 mm

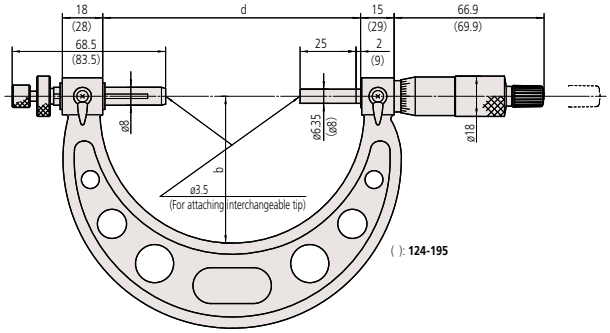

Range (mm)	b	d
50 - 75	65	115.1
75 - 100	79	140.1
100 - 125	93	165.1
125 - 150	105	190
150 - 175	118	214
175 - 200	131	240
200 - 225	144	265
225 - 250	156	290
250 - 275	169	314
275 - 300	187	352

Optional Accessories

- Interchangeable ball anvil/spindle tip set

Order No.	Diameter* (mm)	Gear module	Dia. pitch
124-801	0.8	0.5 - 0.55	50
124-802	1.0	0.6 - 0.65	45
124-803	1.191 (3/64 in)	0.7 - 0.8	35 - 30
124-821	1.5	0.9 - 1	28 - 26
124-804	1.588 (1/16 in)	0.9 - 1	28 - 26
124-805	2.0	1.25	22
124-806	2.381 (3/32 in)	1.5	17
124-822	2.5	1.5	17
124-807	3.0	1.75	15
124-808	3.175 (1/8 in)	—	14
124-823	3.5	2	13
124-809	3.969 (5/32 in)	2	13
124-810	4.0	2.25	11
124-824	4.5	2.5	10
124-811	4.763 (3/16 in)	2.5	10
124-812	5.0	2.75	9
124-813	5.556 (7/32 in)	3.0 - 3.25	8
124-814	6.0	3.5	7
124-815	6.35 (1/4 in)	3.75	7
124-816	7.0	4.0	6.5
124-817	7.144 (9/32 in)	4.25	6
124-818	7.938 (5/16 in)	4.5	5.5
124-819	8.0	4.75	5.5
124-820	8.731 (11/32 in)	5.0 - 5.25	5

* 2 mm less for/carbide-tipped type

Mitutoyo reserves the right to change any or all aspects of any product specification, including prices, designs and service content, without notice.

MeasurLink® ENABLED Data Management Software by Mitutoyo

U-WAVE fit

IP65 ABSOLUTE™

Applicable models: **369-411-20/412-20**

Measurement example



Optional Accessories

Order No.	Type	Description
05CZA662	B	Connecting cable (1 m)
05CZA663	B	Connecting cable (2 m)
06AFM380B	B	USB Input Tool Direct (2 m)
02AZD790B	B	Connecting cables for **U-WAVE-T** (160 mm)
02AZE140B	B	Connecting cables for **U-WAVE-T** For foot switch
264-622	IP67	**U-WAVE-TM**
264-623	Buzzer	**U-WAVE-TM**
264-626	IP67	**U-WAVE-TMB**
264-627	Buzzer	**U-WAVE-TMB**
02AZF310	IP67/ buzzer	Connecting unit for **U-WAVE-TM/TMB**

Disk Micrometers
SERIES 369 — Non-Rotating Spindle Type

- Measures "root tangent length" of spur gears and helical gears.
- Determination of the root tangent length: refer to "Quick Guide to Precision Measuring Instruments" on page B-80.
- Non-rotating spindle type.
- Measurable range of gear pitch: 0.5 to 6 module.
- Equipped with Ratchet Stop for constant measuring force.



Digimatic (LCD)
369-250-30

SPECIFICATIONS

Metric

	Order No.	Range (mm)	Resolution (mm)	Anvil dia. (mm)	Maximum permissible error J_{MPE} (µm)	Flatness (µm)	Parallelism (µm)	Measuring force (N)
Digimatic (LCD)	**369-250-30**	0 - 25	0.001	20	±4	1	4	3 - 8
	369-251-30	25 - 50						
	369-252-30	50 - 75			±6		6	
	369-253-30	75 - 100						

Inch / Metric

	Order No.	Range (in)	Resolution	Anvil dia. (in)	Maximum permissible error J_{MPE} (in)	Flatness (in)	Parallelism (in)	Measuring force (N)
Digimatic (LCD)	**369-350-30**	0 - 1	0.00005 in/ 0.001 mm	0.787	±0.0002	0.00004	0.0002	3 - 8
	369-351-30	1 - 2						
	369-352-30	2 - 3			±0.0003		0.0003	
	369-353-30	3 - 4						

- Battery: SR44 (1 pc.), **938882**, for initial operational checks (standard accessory)
- Battery life: Approx. 2.4 years under normal use
- Length standard: Electromagnetic rotary sensor
- Standard accessories: Setting standard, 1 pc. (except for measuring range 0 to 25 mm (0 to 1 in) models)
  Spanner (**301336**), 1 pc.

Note 1: For functional details, refer to page B-7. Please note that these models are not water-proof.
Note 2: Root tangent length measurement is not available for some types of gears.

DIMENSIONS

Digimatic models up to 75 mm

Unit: mm

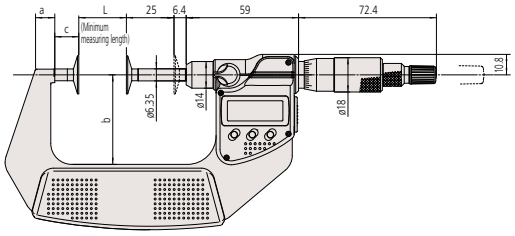

Digimatic models over 75 mm

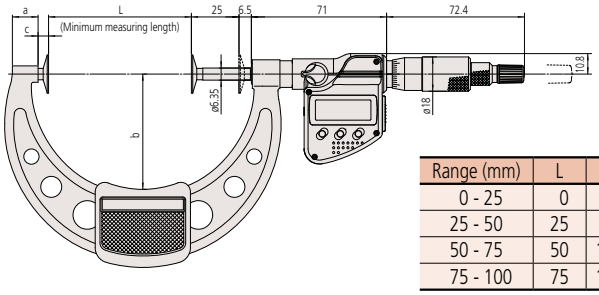

Range (mm)	L	a	b	c
0 - 25	0	7	32	12.9
25 - 50	25	9.8	47	
50 - 75	50	11.2	60	
75 - 100	75	13.5		5.5

Mitutoyo reserves the right to change any or all aspects of any product specification, including prices, designs and service content, without notice.

Mitutoyo

Disk Micrometers
SERIES 369, 227 — Non-Rotating Spindle Type

- Measures "root tangent length" of spur gears and helical gears.
- Determination of the root tangent length: refer to "Quick Guide to Precision Measuring Instruments" on page B-80.
- Non-rotating spindle type.
- Measurable range of gear pitch: 0.5 to 6 module (**series 227**: 0.4 to 3 module).
- Equipped with Ratchet Stop for constant measuring force.



Quickmike type (LCD)
369-411-20

SPECIFICATIONS

Metric

	Order No.	Range (mm)	Resolution (mm)	Anvil dia. (mm)	Maximum permissible error J_{MPE} (µm)	Flatness (µm)	Parallelism (µm)	Measuring force (N)
Quickmike type (LCD)	**369-411-20**	0 - 30	0.001	20	±4	1	4	3 - 8
	369-412-20	25 - 55						
Quickmike type adjustable measuring force (LCD)	**227-221-20**	0 - 15		14.3			3	0.5 - 2.5
	227-223-20	0 - 10						2 - 10

Inch / Metric

	Order No.	Range (in)	Resolution	Anvil dia. (in)	Maximum permissible error J_{MPE} (in)	Flatness (in)	Parallelism (in)	Measuring force (N)
Quickmike type (LCD)	**369-421-20**	0 - 1.2	0.00005 in / 0.001 mm	0.787	±0.0002	0.00004	0.0002	3 - 8
	369-422-20	1 - 2.2						

- Battery: SR44 (1 pc.), **938882**, for initial operational checks (standard accessory)
- Battery life: Approx. 5 years under normal use
- Length standard: Electrostatic capacity absolute sensor
- Standard accessories: Setting standard, 1 pc. (except for measuring range 0 to 10 mm/0 to 15 mm/0 to 30 mm (0 to 1/0 to 1.2 in) models), Screwdriver (**210183**), 1 pc.

Note: Root tangent length measurement is not available for some types of gears.

DIMENSIONS

Quickmike type

Unit: mm

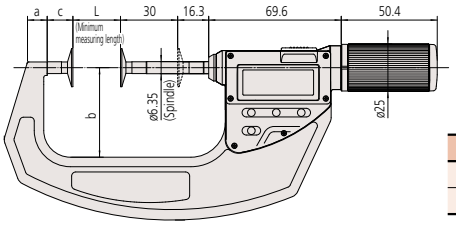

Range (mm)	L	a	b	c
0 - 30	0	8.5	36	13.5
25 - 55	25	10.3	47	

Quickmike adjustable measuring force type

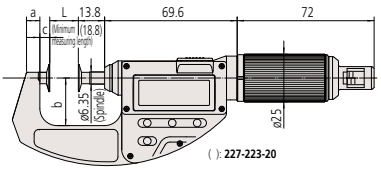

Range (mm)	L	a	b	c
0 - 15	0	6.2	25	5.2
0 - 10	0			

Mitutoyo reserves the right to change any or all aspects of any product specification, including prices, designs and service content, without notice.

Disk Micrometers
SERIES 169 — Non-Rotating Spindle Type

- Measures "root tangent length" of spur gears and helical gears.
- Determination of the root tangent length: refer to "Quick Guide to Precision Measuring Instruments" on page B-80.
- Non-rotating spindle type.
- Measurable range of gear pitch: 0.5 to 6 module.
- Equipped with Ratchet Stop for constant measuring force.



169-201-10

SPECIFICATIONS

Metric

	Order No.	Range (mm)	Graduation (mm)	Anvil dia. (mm)	Maximum permissible error J_{MPE} (µm)	Flatness (µm)	Parallelism (µm)	Measuring force (N)
Analog	**169-201-10**	0 - 25	0.01	20	±4	1	4	3 - 8
	169-202-10	25 - 50						
	169-205-10	50 - 75			±6		6	
	169-207-10	75 - 100						

Inch

	Order No.	Range (in)	Graduation (in)	Anvil dia. (in)	Maximum permissible error J_{MPE} (in)	Flatness (in)	Parallelism (in)	Measuring force (N)
Analog	**169-203-10**	0 - 1	0.001	0.787	±0.0002	0.00004	0.0002	3 - 8
	169-204-10	1 - 2						
	169-206-10	2 - 3			±0.0003		0.0003	
	169-208-10	3 - 4						

- Standard accessories: Setting standard, 1 pc. (except for measuring range 0 to 25 mm (0 to 1 in) models)
  Spanner (**301336**), 1 pc.

Note: Root tangent length measurement is not available for some types of gears.

DIMENSIONS

Analog models up to 50 mm

Unit: mm

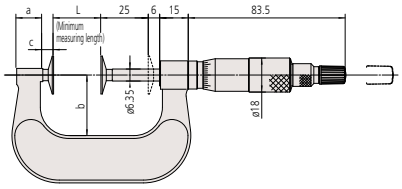

Analog models over 50 mm

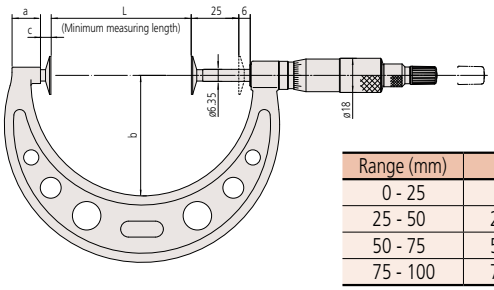

Range (mm)	L	a	b	c
0 - 25	0	13.8	25	5.7
25 - 50	25		32	
50 - 75	50	12	49	5.5
75 - 100	75	14	63	

Mitutoyo reserves the right to change any or all aspects of any product specification, including prices, designs and service content, without notice.

Sheet Metal Micrometers SERIES 389

- Measures thickness of sheet metal.
- Measuring faces: Carbide.
- Profile of measuring faces: Flat-Flat, Spherical-Flat and Spherical-Spherical.
- Equipped with Ratchet Stop for constant measuring force.



389-251-30



SPECIFICATIONS

Metric

Order No.	Range (mm)	Resolution (mm)	Maximum permissible error J_{MPE} (µm)	Flatness (µm)	Parallelism (µm)	Throat depth (mm)	Measuring surfaces
Digimatic (LCD)							
389-251-30	0 - 25	0.001	±4	0.6	3	150	F-F
389-261-30							S-F
389-271-30							S-S
389-514			±5	1		300*	F-F
389-252-30	25 - 50		±4	0.6		150	F-F
389-262-30							S-F
389-272-30							S-S

Inch / Metric

Order No.	Range (in)	Resolution	Maximum permissible error J_{MPE} (in)	Flatness (in)	Parallelism (in)	Throat depth (in)	Measuring surfaces
Digimatic (LCD)							
389-351-30	0 - 1	0.00005 in / 0.001 mm	±0.0002	0.000024	0.00012	6	F-F
389-361-30							S-F
389-371-30							S-S
389-714			±0.00025	0.00004		12*	F-F
389-352-30	1 - 2		±0.0002	0.000024		6	F-F
389-362-30							S-F
389-372-30							S-S

- Battery: SR44 (1 pc.), **938882**, 2 pcs.: **389-514**, **389-714** for initial operational checks (standard accessory)
- Battery life: Approx. 2.4 years under normal use (for **389-2XX**, **3XX**), Approx. 1.8 years under normal use (for **389-514**, **714**)
- Length standard: Electromagnetic rotary sensor
- Standard accessories: Setting standard, 1 pc. (except for measuring range 0 to 25 mm (0 to 1 in) models)
  Spanner (**301336**), 1 pc. (for **389-2XX**, **3XX**)
  Spanner (**200154**), 1 pc. (for **389-514**, **714**)

* Models with a 300 mm (12 in) throat are equipped with a stand for convenience of measurement in the horizontal orientation as standard.

Note 1: For functional details of **389-251-30**/**389-252-30**/**389-351-30**/**389-352-30** refer to page B-7.
Note 2: For functional details of **389-514**/**389-714** refer to page B-9.
Note 3: In spherical-flat anvil type micrometers, the measuring face on the anvil side is spherical.

DIMENSIONS

389-514

Unit: mm

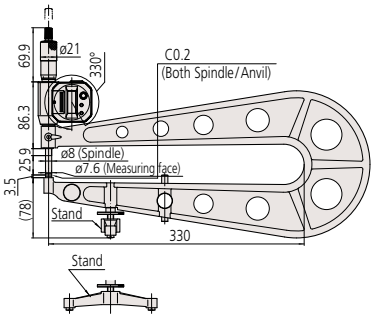

MeasurLink® ENABLED
Data Management Software by Mitutoyo

U-WAVE fit

IP65

Dust- and Water-Protected
TÜVRheinland CERTIFIED
www.tuv.com ID 0000040191

Applicable models: **series 389**
(excluding **389-514** and **389-714**)

Optional Accessories

Order No.	Type	Description
05CZA662	B	Connecting cables (1 m) : for **series 389**
05CZA663	B	Connecting cables (2 m) : for **series 389**
06AFM380B	B	USB Input Tool Direct (2 m)
02AZD790B	B	Connecting cables for **U-WAVE-T** (160 mm): for **series 389**
02AZE140B	B	Connecting cables for **U-WAVE-T**: for **series 389** For foot switch
04AZB512	CR	Connecting cable (1 m): for **389-514**
04AZB513	CR	Connecting cable (2 m): for **389-514**
959149	C	Connecting cable (1 m): for **389-514**
959150	C	Connecting cable (2 m): for **389-514**
264-622	IP67	**U-WAVE-TM***
264-623	Buzzer	**U-WAVE-TM***
264-626	IP67	**U-WAVE-TMB**
264-627	Buzzer	**U-WAVE-TMB**
02AZF310	IP67/ buzzer	Connecting unit for **U-WAVE-TM**/**TMB***

* Cannot be used with **389-514**.

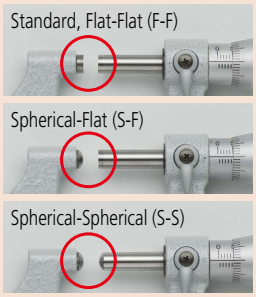

Mitutoyo reserves the right to change any or all aspects of any product specification, including prices, designs and service content, without notice.

Sheet Metal Micrometers SERIES 118

- Measures thickness of sheet metal.
- Measuring faces: Carbide.
- Profile of measuring faces: Flat-Flat, Spherical-Flat and Spherical-Spherical.
- Equipped with Ratchet Stop for constant measuring force.



118-102

SPECIFICATIONS

Metric

Order No.	Range (mm)	Graduation (mm)	Maximum permissible error J_{MPE} (µm)	Flatness (µm)	Parallelism (µm)	Throat depth (mm)	Measuring surfaces
Analog							
118-101	0 - 25	0.01	±4	0.6	3	100	F-F
118-102							
118-114						150	S-F
118-118							S-S
118-103			±5	1		300*	F-F
118-110	25 - 50		±4	0.6		150	
118-126							S-S

Inch

Order No.	Range (in)	Graduation (in)	Maximum permissible error J_{MPE} (in)	Flatness (in)	Parallelism (in)	Throat depth (in)	Measuring surfaces
Analog							
118-129	0 - 1	0.0001	±0.0002	0.000024	0.00012	6	F-F
118-116							S-F
118-120							S-S
118-107		0.001	±0.00025	0.00004		12*	F-F
118-112	1 - 2		±0.0002	0.000024		6	

- Standard accessories: Setting standard, 1 pc. (except for measuring range 0 to 25 mm (0 to 1 in) models)
  Spanner (**200877**), 1 pc. (for **118-1XX**)
  Spanner (**200154**), 1 pc. (for **118-103**/**107**)

* Models with a 300 mm (12 in) throat are equipped with a stand for convenience of measurement in the horizontal orientation as standard.

Note: In spherical-flat anvil type micrometers, the measuring face on the anvil side is spherical.

DIMENSIONS

Analog models

Unit: mm

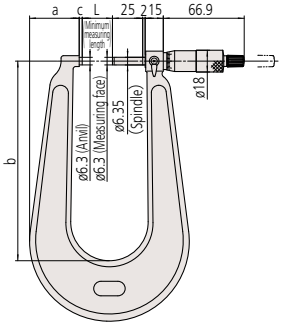

Order No.	L	a	b	c
118-101	0	34	110	2.5
118-102				
118-114		43	160	
118-118				
118-110	25	41	165	

Mitutoyo reserves the right to change any or all aspects of any product specification, including prices, designs and service content, without notice.

Sheet Metal Micrometer SERIES 119

- Large diameter dial model enables easy and quick measurement of sheet metal thickness.
- Adjustable anvil.
- Measuring faces: Carbide.
- Equipped with Ratchet Stop for constant measuring force.



119-202

Measurement example



SPECIFICATIONS

Metric

Order No.	Range (mm)	Graduation (mm)	Maximum permissible error J_{MPE} (µm)	Throat depth (mm)
119-202	0 - 25	0.01	±4	50

- Standard Accessories: Spanner (**200168**), 1 pc.

DIMENSIONS

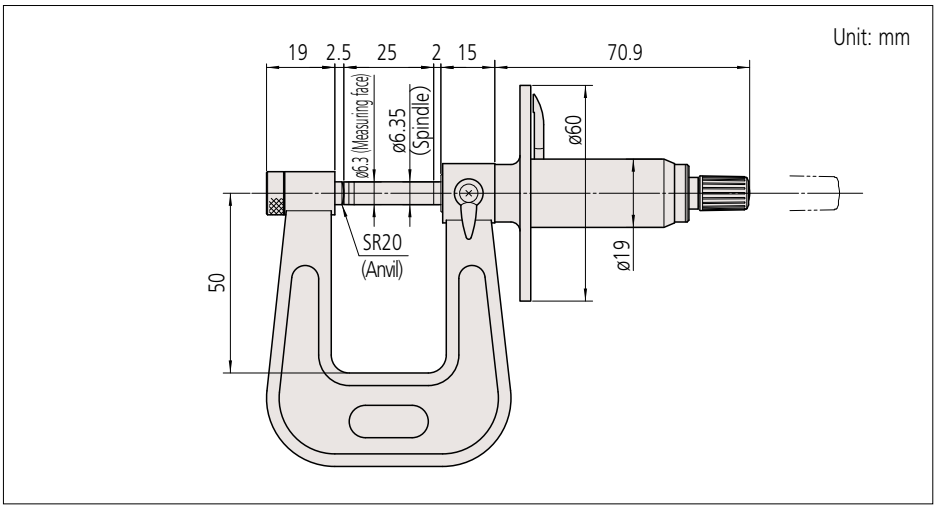

Mitutoyo reserves the right to change any or all aspects of any product specification, including prices, designs and service content, without notice.

MeasurLink® ENABLED Data Management Software by Mitutoyo

U-WAVE fit

IP65 Dust- and Water-Protected TÜVRheinland CERTIFIED www.tuv.com ID 0000040191

Applicable models: **series 395**

Measurement example



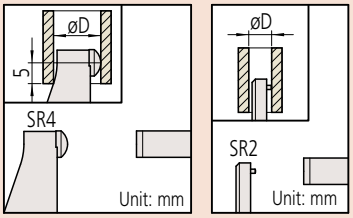

Other than **115-101**

115-101

Optional Accessories

Order No.	Type	Description
05CZA662	B	Connecting cable for **series 395** (1 m)
05CZA663	B	Connecting cable for **series 395** (2 m)
06AFM380B	B	USB Input Tool Direct (2 m)
02AZD790B	B	Connecting cables for **U-WAVE-T** (160 mm)
02AZE140B	B	Connecting cables for **U-WAVE-T** For foot switch
264-622	IP67	**U-WAVE-TM**
264-623	Buzzer	**U-WAVE-TM**
264-626	IP67	**U-WAVE-TMB**
264-627	Buzzer	**U-WAVE-TMB**
02AZF310	IP67/ buzzer	Connecting unit for **U-WAVE-TM/TMB**

Tube Micrometers SERIES 395, 115, 295

- Measuring faces: Carbide. (**115-101**: only the spindle is carbide tipped.)
- **series 395**: IP65 digimatic model.
- Equipped with Ratchet Stop for constant measuring force.



395-251-30

SPECIFICATIONS

Metric

Order No.	Range (mm)	Resolution (mm)	Maximum permissible error J_{MPE} (µm)	øD (mm)	Flatness (µm)
Digimatic (LCD)					
395-251-30	0 - 25	0.001	±2	ø15	0.3
395-252-30	25 - 50				
395-253-30	50 - 75			ø19	
395-254-30	75 - 100		±3	ø20	

Inch/Metric

Order No.	Range (in)	Resolution	Maximum permissible error J_{MPE} (in)	øD (in)	Flatness (in)
Digimatic (LCD)					
395-351-30	0 - 1	0.00005 in/ 0.001 mm	±0.0001	ø0.59	0.000012
395-352-30	1 - 2				
395-353-30	2 - 3			ø0.75	
395-354-30	3 - 4		±0.00015	ø0.79	

- Battery: SR44 (1 pc.), **938882**, for initial operational checks (standard accessory)
- Battery life: Approx. 2.4 years under normal use
- Length standard: Electromagnetic rotary sensor
- Standard accessories: Setting standard, 1 pc. (except for measuring range 0 to 25 mm (0 to 1 in) models), Spanner (**301336**), 1 pc.

Note: For functional details , refer to page B-7.
Optional connecting cable is available only for water-proof type (Digimatic model).



115-115

SPECIFICATIONS

Metric

Order No.	Range (mm)	Graduation (mm)	Maximum permissible error J_{MPE} (µm)	øD (mm)	Flatness (µm)
Analog					
115-101	0 - 15	0.01	±3	ø5.5	0.6
115-115	0 - 25			ø10	
115-116	25 - 50			ø11	
115-117	50 - 75			ø17	
115-118	75 - 100		±4	ø18	
Mechanical counter model					
295-115	0 - 25	0.01	±3	ø10	0.6

Inch

Order No.	Range (in)	Graduation (in)	Maximum permissible error J_{MPE} (in)	øD (in)	Flatness (in)
Analog					
115-153	0 - 1	0.0001	±0.00015	ø0.40	0.000024
Mechanical counter model					
295-153	0 - 1	0.0001	±0.00015	ø0.40	0.000024

- Standard accessories: Setting standard, 1 pc. (except for measuring range 0 to 15 mm/0 to 25 mm (0 to 1 in) models) Spanner (**200168**), 1 pc. (for **115-101**), Spanner (**301336**), 1 pc. (for models other than **115-101**)

DIMENSIONS

Unit: mm

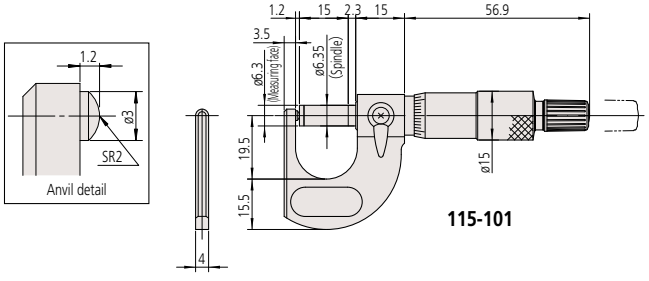

115-101

Mitutoyo reserves the right to change any or all aspects of any product specification, including prices, designs and service content, without notice.

Mitutoyo

B

Tube Micrometers
SERIES 395, 115, 295 — Spherical Anvil and Spindle Type

- Measuring faces: Carbide. (**115-201**: only the spindle is carbide tipped.)
- **series 395**: IP65 digimatic model.
- Equipped with Ratchet Stop for constant measuring force.



395-271-30

SPECIFICATIONS

Metric

Order No.	Range (mm)	Resolution (mm)	Maximum permissible error J_{MPE} (µm)	øD (mm)
Digimatic (LCD)				
395-271-30	0 - 25	0.001	±2	ø15
395-272-30	25 - 50			
395-273-30	50 - 75			ø19
395-274-30	75 - 100		±3	ø20

Inch / Metric

Order No.	Range (in)	Resolution	Maximum permissible error J_{MPE} (in)	øD (in)
Digimatic (LCD)				
395-371-30	0 - 1	0.00005 in / 0.001 mm	±0.0001	ø0.59
395-372-30	1 - 2			
395-373-30	2 - 3			ø0.75
395-374-30	3 - 4		±0.00015	ø0.79

- Battery: SR44 (1 pc.), **938882**, for initial operational checks (standard accessory)
- Battery life: Approx. 2.4 years under normal use
- Length standard: Electromagnetic rotary sensor
- Standard accessories: Setting standard, 1 pc. (except for measuring range 0 to 25 mm (0 to 1 in) models), Spanner (**301336**), 1 pc.

Note: For functional details, refer to page B-7.
Optional connecting cable is available only for water-proof type (Digimatic model).



115-215

SPECIFICATIONS

Metric

Order No.	Range (mm)	Graduation (mm)	Maximum permissible error J_{MPE} (µm)	øD (mm)
Analog				
115-201	0 - 15	0.01	±3	ø5.5
115-215	0 - 25			ø10
115-216	25 - 50			ø11
115-217	50 - 75			ø17
115-218	75 - 100		±4	ø18
Mechanical counter model				
295-215	0 - 25	0.01	±3	ø10

Inch

Order No.	Range (in)	Graduation (in)	Maximum permissible error J_{MPE} (in)	øD (in)
Analog				
115-253	0 - 1	0.0001	±0.00015	ø0.40
115-242	1 - 2	0.001		ø0.44
115-243	2 - 3			ø0.67
Mechanical counter model				
295-253	0 - 1	0.0001	±0.00015	ø0.40

- Standard accessories: Setting standard, 1 pc. (except for measuring range 0 to 15 mm / 0 to 25 mm (0 to 1 in) models) Spanner (**200168**), 1 pc. (for **115-201**), Spanner (**301336**), 1 pc. (for models other than **115-201**)

DIMENSIONS

Unit: mm

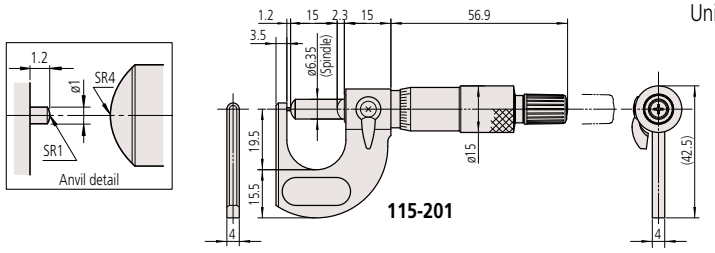

115-201

MeasurLink® ENABLED
Data Management Software by Mitutoyo

U-WAVE fit

IP65

TÜVRheinland CERTIFIED
Dust- and Water-Protected
www.tuv.com ID 0000040191

Applicable models: **series 395**

Measurement example



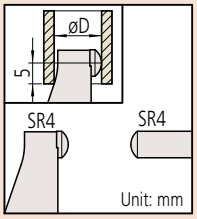

Other than **115-201**

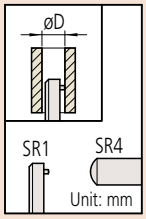

115-201

Optional Accessories

Order No.	Type	Description
05CZA662	B	Connecting cable for **series 395** (1 m)
05CZA663	B	Connecting cable for **series 395** (2 m)
06AFM380B	B	USB Input Tool Direct (2 m)
02AZD790B	B	Connecting cables for **U-WAVE-T** (160 mm)
02AZE140B	B	Connecting cables for **U-WAVE-T** For foot switch
264-622	IP67	**U-WAVE-TM**
264-623	Buzzer	**U-WAVE-TM**
264-626	IP67	**U-WAVE-TMB**
264-627	Buzzer	**U-WAVE-TMB**
02AZF310	IP67/ buzzer	Connecting unit for **U-WAVE-TM/TMB**

Mitutoyo reserves the right to change any or all aspects of any product specification, including prices, designs and service content, without notice.

MeasurLink® ENABLED Data Management Software by Mitutoyo

U-WAVE fit

IP65

Dust- and Water-Protected

Applicable models: **series 395**

Measurement example



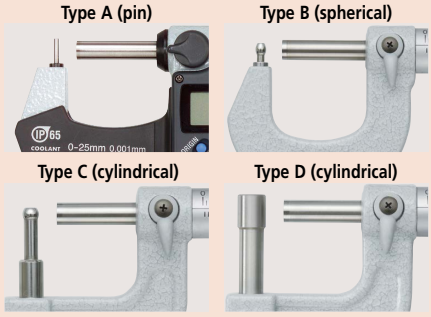

Optional Accessories

Order No.	Type	Description
05CZA662	B	Connecting cable for **series 395** (1 m)
05CZA663	B	Connecting cable for **series 395** (2 m)
06AFM380B	B	USB Input Tool Direct (2 m)
02AZD790B	B	Connecting cables for **U-WAVE-T** (160 mm)
02AZE140B	B	Connecting cables for **U-WAVE-T** For foot switch
264-622	IP67	**U-WAVE-TM**
264-623	Buzzer	**U-WAVE-TM**
264-626	IP67	**U-WAVE-TMB**
264-627	Buzzer	**U-WAVE-TMB**
02AZF310	IP67/ buzzer	Connecting unit for **U-WAVE-TM/TMB**

Anvil shape

Unit: mm

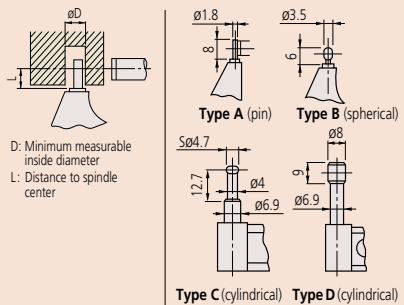

Anvil	øD	L
Type A	ø2.0	4
Type B	ø3.6	
Type C	ø4.8	12
Type D	ø8.2	22

Tube Micrometers
SERIES 395, 115, 295 — Spherical and Cylindrical Anvil Type

- Spindle face: Carbide.
- **Series 395**: IP65 digimatic model.
- Equipped with Ratchet Stop for constant measuring force.



395-261-30

SPECIFICATIONS

Metric

Order No.	Range (mm)	Resolution (mm)	Maximum permissible error J_{MPE} (µm)	Remarks
Digimatic (LCD)				
395-261-30	0 - 25	0.001	±3	Type A
395-262-30				Type B
395-263-30				Type C
395-264-30				Type D

Inch / Metric

Order No.	Range (in)	Resolution	Maximum permissible error J_{MPE} (in)	Remarks
Digimatic (LCD)				
395-362-30	0 - 1	0.00005 in/ 0.001 mm	±0.00015	Type B
395-363-30				Type C
395-364-30				Type D

- Battery: SR44 (1 pc.), **938882**, for initial operational checks (standard accessory)
- Battery life: Approx. 2.4 years under normal use
- Length standard: Electromagnetic rotary sensor
- Standard accessories: Spanner (**301336**), 1 pc.

Note: For functional details, refer to page B-7.
Optional connecting cable is available only for water-proof type (Digimatic model).

DIMENSIONS

Unit: mm

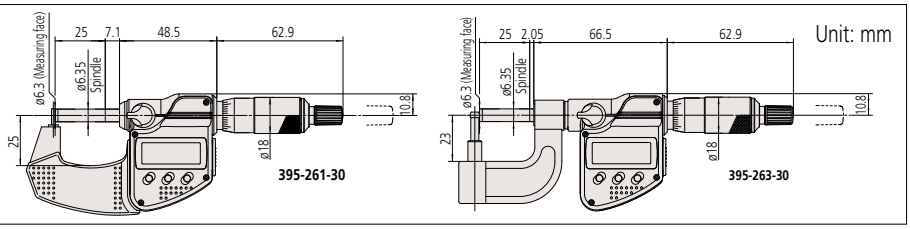

SPECIFICATIONS

Metric

Order No.	Range (mm)	Graduation (mm)	Maximum permissible error J_{MPE} (µm)	Remarks
Analog				
115-302	0 - 25	0.01	±3	Type A
115-308				Type B
115-303	25 - 50			Type A
115-309				Type B
115-315	0 - 25			Type C
115-316				Type D

Inch

Order No.	Range (in)	Graduation (in)	Maximum permissible error J_{MPE} (in)	Remarks
Analog				
115-305	0 - 1	0.001	±0.00015	Type A
115-313		0.0001		Type C
115-314				Type D

- Standard accessories: Setting standard, 1 pc. (except for measuring range 0 to 25 mm (0 to 1 in) models) Spanner (**301336**), 1 pc.

DIMENSIONS

Unit: mm

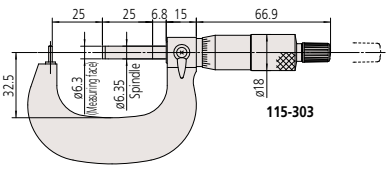

Mitutoyo reserves the right to change any or all aspects of any product specification, including prices, designs and service content, without notice.

Mitutoyo

B

Spline Micrometers SERIES 331

- The anvil and spindle have a small diameter for measuring splined shafts, slots and keyways.
- IP65 water/dust protection.
- Measuring faces: Carbide.
- Equipped with Ratchet Stop for constant measuring force.



331-251-30

SPECIFICATIONS

Metric

Order No.	Range (mm)	Resolution (mm)	Maximum permissible error J_{MPE} (µm)	Flatness (µm)	Parallelism (µm)	Remarks
Digimatic (LCD)						
331-251-30	0 - 25	0.001	±2	0.3	2	Type A
331-252-30	25 - 50					
331-253-30	50 - 75					
331-254-30*	75 - 100		±3		3	
331-261-30	0 - 25		±2		2	Type B
331-262-30	25 - 50					
331-263-30	50 - 75					
331-264-30*	75 - 100		±3		3	

Inch / Metric

Order No.	Range (in)	Resolution	Maximum permissible error J_{MPE} (in)	Flatness (in)	Parallelism (in)	Remarks
Digimatic (LCD)						
331-351-30	0 - 1	0.00005 in/ 0.001 mm	±0.0001	0.000012	0.00008	Type A
331-352-30	1 - 2					
331-353-30	2 - 3					
331-354-30	3 - 4		±0.00015		0.00012	
331-361-30	0 - 1		±0.0001		0.00008	Type B
331-362-30	1 - 2					
331-363-30	2 - 3					
331-364-30	3 - 4		±0.00015		0.00012	

- Battery: SR44 (1 pc.), **938882**, for initial operational checks (standard accessory)
- Battery life: Approx. 2.4 years under normal use
- Length standard: Electromagnetic rotary sensor
- Standard accessories: Setting standard, 1 pc. (except for measuring range 0 to 25 mm (0 to 1 in) models), Spanner (**301336**), 1 pc.

* Made to order.

Note: For functional details, refer to page B-7.
Optional connecting cable is available only for water-proof type (Digimatic model).

DIMENSIONS

Unit: mm

Digimatic models
Models up to 75 mm measuring range

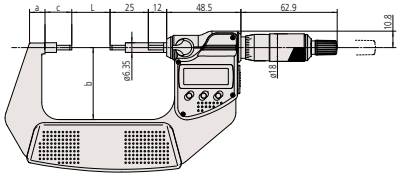

Digimatic models
Models over 75 mm measuring range

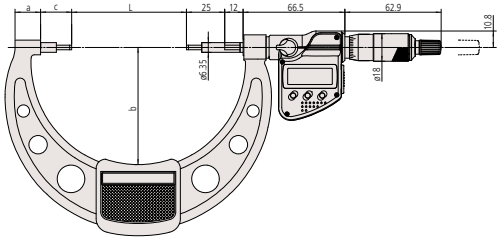

Order No.	L	a	b	c
331-251-30	0	7.3	32.5	17.5
331-261-30				
331-252-30	25	10.1	47	
331-262-30				
331-253-30	50	11.5	60	
331-263-30				
331-254-30	75	16.7	76	20.3
331-264-30				

MeasurLink® ENABLED Data Management Software by Mitutoyo

U-WAVE fit

IP65 Dust- and Water-Protected TÜVRheinland CERTIFIED www.tuv.com ID 0000040191

Measurement example



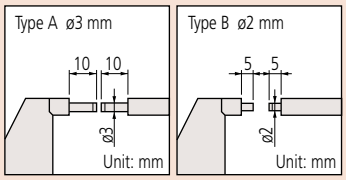

Optional Accessories

Order No.	Type	Description
05CZA662	B	Connecting cable (1 m)
05CZA663	B	Connecting cable (2 m)
06AFM380B	B	USB Input Tool Direct (2 m)
02AZD790B	B	Connecting cables for **U-WAVE-T** (160 mm)
02AZE140B	B	Connecting cables for **U-WAVE-T** For foot switch
264-622	IP67	**U-WAVE-TM**
264-623	Buzzer	**U-WAVE-TM**
264-626	IP67	**U-WAVE-TMB**
264-627	Buzzer	**U-WAVE-TMB**
02AZF310	IP67/ buzzer	Connecting unit for **U-WAVE-TM/TMB**

Mitutoyo reserves the right to change any or all aspects of any product specification, including prices, designs and service content, without notice.

Spline Micrometers
SERIES 111, 131

- The anvil and spindle have a small diameter for measuring splined shafts, slots and keyways.
- Measuring faces: Carbide.
- Equipped with Ratchet Stop for constant measuring force.



111-115

SPECIFICATIONS

Metric

Order No.	Range (mm)	Graduation (mm)	Maximum permissible error J_{MPE} (µm)	Flatness (µm)	Parallelism (µm)	Remarks
Analog						
111-215	0 - 25	0.01	±3	0.3	2	Type B
111-115	0 - 25					Type A
111-116	25 - 50					
111-117	50 - 75					
111-118	75 - 100		±4		3	
111-119	100 - 125					
111-120	125 - 150					
111-121	150 - 175		±5		4	
111-122	175 - 200					
111-123	200 - 225					
111-124	225 - 250		±6			
111-125	250 - 275					
111-126	270 - 300				5	
Mechanical counter model						
131-115	0 - 25	0.01	±3	0.3	2	Type A

Inch

Order No.	Range (in)	Graduation (in)	Maximum permissible error J_{MPE} (in)	Flatness (in)	Parallelism (in)	Remarks
Analog						
111-166	0 - 1	0.0001	±0.00015	0.000012	0.00008	Type A

- Standard accessories: Setting standard, 1 pc. (except for measuring range 0 to 25 mm (0 to 1 in) models), Spanner (**301336**), 1 pc.

DIMENSIONS

Analog models

Unit: mm

Models up to 300 mm measuring range

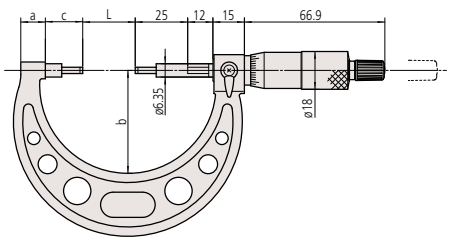

Order No.	L	a	b	c
111-215	0	10	38	17.5
111-115				
111-116	25	12	49	
111-117	50	14	60	
111-118	75	16.7	79	20.3
111-119	100	18.8	94	20.7
111-120	125	19.1	106	21.1
111-121	150	18.2	118	21.3
111-122	175	16.8	130	21.7
111-123	200	18	143	20.5
111-124	225		156	21.5
111-125	250		169	
111-126	275		181	

Mitutoyo reserves the right to change any or all aspects of any product specification, including prices, designs and service content, without notice.

Mitutoyo

Point Micrometers SERIES 342

- Ideal tool for measuring drill web diameters, small grooves and other hard-to-reach points.
- The measuring points (carbide tipped) have approximately 0.3 mm radius.
- IP65 Digimatic micrometers.
- Equipped with Ratchet Stop for constant measuring force.



342-251-30

SPECIFICATIONS

Metric

Order No.	Range (mm)	Resolution (mm)	Maximum permissible error J_{MPE} (µm)	Point
Digimatic (LCD) (With carbide tip)				
342-251-30	0 - 25	0.001	±2	15°
342-252-30	25 - 50			
342-253-30	50 - 75			
342-254-30*	75 - 100		±3	
342-261-30	0 - 25		±2	30°
342-262-30	25 - 50			
342-263-30	50 - 75			
342-264-30*	75 - 100		±3	

Inch / Metric

Order No.	Range (in)	Resolution	Maximum permissible error J_{MPE} (in)	Point
Digimatic (LCD) (With carbide tip)				
342-351-30	0 - 1	0.00005 in/ 0.001 mm	±0.0001	15°
342-352-30	1 - 2			
342-353-30	2 - 3			
342-354-30	3 - 4		±0.00015	
342-361-30	0 - 1		±0.0001	30°
342-362-30	1 - 2			
342-363-30	2 - 3			
342-364-30	3 - 4		±0.00015	

- Battery: SR44 (1 pc.), **938882**, for initial operational checks (standard accessory)
- Battery life: Approx. 2.4 years under normal use
- Length standard: Electromagnetic rotary sensor
- Standard accessories: Setting standard, 1 pc. (except for measuring range 0 to 25 mm (0 to 1 in) models), Spanner (**301336**), 1 pc.

* Made to order.

Note: For functional details, refer to page B-7.
Optional connecting cable is available only for water-proof type (Digimatic model).

DIMENSIONS

Digimatic models up to 75 mm measuring range

Unit: mm

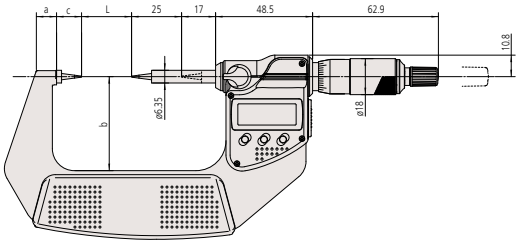

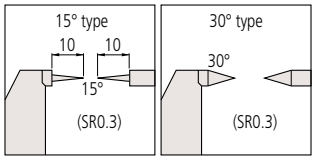

Digimatic models over 75 mm measuring range

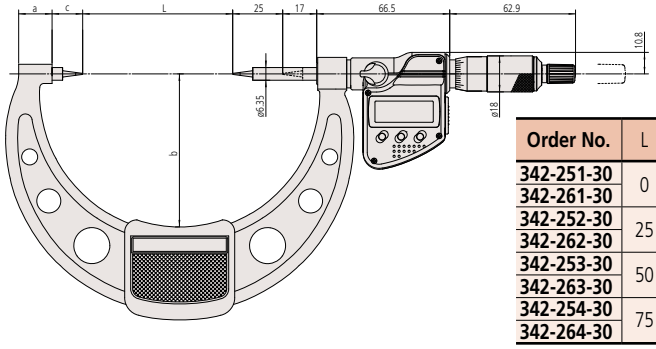

Order No.	L	a	b	c	Frame thickness*
342-251-30 **342-261-30**	0	7.3	32.5	12.5	(11.2)
342-252-30 **342-262-30**	25	10.1	47		(12.8)
342-253-30 **342-263-30**	50	11.5	60		
342-254-30 **342-264-30**	75	16.7	76	15.3	(20.8)

* Digimatic type: thickness over heat shield

MeasurLink® ENABLED Data Management Software by Mitutoyo

U-WAVE fit

IP65 Dust- and Water-Protected

TÜVRheinland CERTIFIED www.tuv.com ID 0000040191

Measurement example







Optional Accessories

Order No.	Type	Description
05CZA662	B	Connecting cable (1 m)
05CZA663	B	Connecting cable (2 m)
06AFM380B	B	USB Input Tool Direct (2 m)
02AZD790B	B	Connecting cables for **U-WAVE-T** (160 mm)
02AZE140B	B	Connecting cables for **U-WAVE-T** For foot switch
264-622	IP67	**U-WAVE-TM**
264-623	Buzzer	**U-WAVE-TM**
264-626	IP67	**U-WAVE-TMB**
264-627	Buzzer	**U-WAVE-TMB**
02AZF310	IP67/ buzzer	Connecting unit for **U-WAVE-TM/TMB**

Mitutoyo reserves the right to change any or all aspects of any product specification, including prices, designs and service content, without notice.

Point Micrometers
SERIES 112, 142

- Ideal tool for measuring drill web diameters, small grooves and other hard-to-reach points.
- The measuring points (carbide tipped) have approximately 0.3 mm radius.
- Equipped with Ratchet Stop for constant measuring force.



112-201

SPECIFICATIONS

Metric

Order No.	Range (mm)	Graduation (mm)	Maximum permissible error J_{MPE} (µm)	Point
Analog				
112-153	0 - 25	0.01	±3	15°
112-154	25 - 50			
112-155	50 - 75			
112-156	75 - 100		±4	
112-201	0 - 25		±3	30°
112-202	25 - 50			
112-203	50 - 75			
112-204	75 - 100		±4	
Analog (With carbide tip)				
112-165	0 - 25		±3	15°
112-166	25 - 50			
112-167	50 - 75			
112-168	75 - 100		±4	
112-213	0 - 25		±3	30°
112-214	25 - 50			
112-215	50 - 75			
112-216	75 - 100		±4	
Mechanical counter model				
142-153	0 - 25		±3	15°
142-201				30°

Inch

Order No.	Range (in)	Graduation (in)	Maximum permissible error J_{MPE} (in)	Point
Analog				
112-177	0 - 1	0.001	±0.00015	15°
112-178	1 - 2			
112-225	0 - 1			30°
112-226	1 - 2			
Analog (With carbide tip)				
112-189	0 - 1		±0.00015	15°
112-190	1 - 2			
112-191	2 - 3			
112-237	0 - 1			30°
112-238	1 - 2			
Mechanical counter model				
142-177	0 - 1		±0.00015	15°
142-225				30°

• Standard accessories: Setting standard, 1 pc. (except for measuring range 0 to 25 mm (0 to 1 in) models), Spanner (**301336**), 1 pc.

DIMENSIONS

Analog models measuring range

Unit: mm

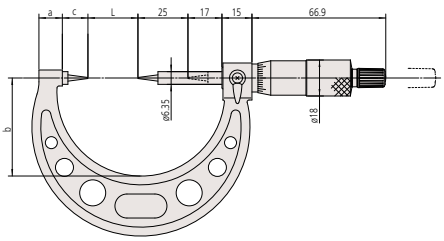

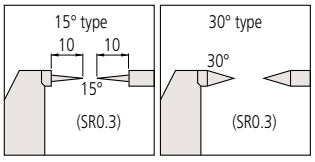

Order No.	L	a	b	c	Frame thickness
112-153	0	10	38	12.5	(9)
112-154	25	12	49		(10)
112-155	50	14	60		(11)
112-156	75	16.7	79	15.3	(13)

Mitutoyo reserves the right to change any or all aspects of any product specification, including prices, designs and service content, without notice.

MeasurLink ENABLED Data Management Software by Mitutoyo

U-WAVE fit

V-Anvil Micrometers
SERIES 314 — 3 Flutes and 5 Flutes

- Measures the outside diameter of taps and reamers with an odd number of flutes.
- Measures pitch diameter: refer to "Quick Guide to Precision Measuring Instruments" on page B-80.
- Measuring faces: Carbide.
- Equipped with Ratchet Stop for constant measuring force.



314-251-30

SPECIFICATIONS

Metric For 3-flute cutting tools

Order No.	Range (mm)	Resolution (mm)	Maximum permissible error J_{MPE} (µm)	Anvil	Remarks
Digimatic (LCD)					
314-251-30	1 - 15	0.001	±4	60°	w/groove
314-252-30	10 - 25				
314-253-30	25 - 40		±5		—
314-261-30	1 - 15		±4		—
314-262-30	10 - 25				—

Inch / Metric For 3-flute cutting tools

Order No.	Range (in)	Resolution	Maximum permissible error J_{MPE} (in)	Anvil	Remarks
Digimatic (LCD)					
314-351-30	0.05 - 0.6	0.00005 in/ 0.001 mm	±0.0002	60°	w/groove
314-352-30	0.4 - 1				
314-353-30	1 - 1.6		±0.00025		—
314-361-30	0.05 - 0.6		±0.0002		—
314-362-30	0.4 - 1				—

- Flatness: 0.3 µm/0.000012 in (Spindle), 1.0 µm/0.00004 in (Anvil)
- Battery: SR44 (1 pc.), **938882**, for initial operational checks (standard accessory)
- Battery life: Approx. 2.4 years under normal use
- Length standard: Electromagnetic rotary sensor
- Standard accessories: Spanner (**301336**), 1 pc. (for maximum measuring range up to 40 mm (1.6 in)), Setting Standards for V-Anvil Micrometer

Note: For functional details, refer to page B-7.
The models above use the same connection cables and connection units as our IP rated micrometers but these digital V-Anvil Micrometers are not IP rated.

Measurement example



Pitch Diameter Measurement of Tap by Single-wire Method

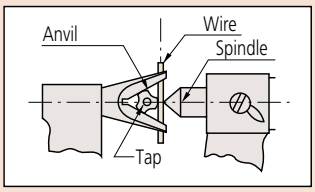

Optional Accessories

Order No.	Type	Description
05CZA662	B	Connecting cable (1 m)
05CZA663	B	Connecting cable (2 m)
06AFM380B	B	USB Input Tool Direct (2 m)
02AZD790B	B	Connecting cables for **U-WAVE-T** (160 mm)
02AZE140B	B	Connecting cables for **U-WAVE-T** For foot switch
264-622	IP67	**U-WAVE-TM**
264-623	Buzzer	**U-WAVE-TM**
264-626	IP67	**U-WAVE-TMB**
264-627	Buzzer	**U-WAVE-TMB**
02AZF310	IP67/ buzzer	Connecting unit for **U-WAVE-TM/TMB**

Mitutoyo reserves the right to change any or all aspects of any product specification, including prices, designs and service content, without notice.

V-Anvil Micrometers
SERIES 114 — 3 Flutes and 5 Flutes

- Measures the outside diameter of taps and reamers with an odd number of flutes.
- Measures pitch diameter: refer to "Quick Guide to Precision Measuring Instruments" on page B-80.
- Measuring faces: Carbide.
- Equipped with Ratchet Stop for constant measuring force.



114-121

SPECIFICATIONS

Metric For 3-flute cutting tools

Order No.	Range (mm)	Graduation (mm)	Maximum permissible error J_{MPE} (µm)	Anvil	Remarks
Analog Anvil, Spindle (With carbide tip)					
114-204	2.3 - 25	0.01	±4	60°	—
Analog Spindle (With carbide tip)					
114-101	1 - 15	0.01	±4	60°	w/groove
114-102	10 - 25	0.01	±4	60°	w/groove
114-103	25 - 40	0.01	±5	60°	—
114-104	40 - 55	0.01	±6	60°	—
114-105	55 - 70	0.01	±6	60°	—
114-106	70 - 85	0.01	±7	60°	—
114-161	1 - 15	0.01	±4	60°	—
114-162	10 - 25	0.01	±4	60°	—

Inch For 3-flute cutting tools

Order No.	Range (in)	Graduation (in)	Maximum permissible error J_{MPE} (in)	Anvil	Remarks
Analog Anvil, Spindle (With carbide tip)					
114-202	0.09 - 1	0.0001	±0.0002	60°	—
Analog Spindle (With carbide tip)					
114-163	0.05 - 0.6	0.001	±0.0002	60°	—
114-113	1 - 1.6	0.001	±0.00025	60°	—
114-114	1.6 - 2.2	0.001	±0.0003	60°	—

Metric For 5-flute cutting tools

Order No.	Range (mm)	Graduation (mm)	Maximum permissible error J_{MPE} (µm)	Anvil	Remarks
Analog Anvil, Spindle (With carbide tip)					
114-137	2.3 - 25	0.01	±4	108°	—
Analog Spindle (With carbide tip)					
114-121	5 - 25	0.01	±4	108°	w/groove
114-122	25 - 45	0.01	±5	108°	—
114-123	45 - 65	0.01	±6	108°	—
114-124	65 - 85	0.01	±7	108°	—
114-165	5 - 25	0.01	±4	108°	—

Inch For 5-flute cutting tools

Order No.	Range (in)	Graduation (in)	Maximum permissible error J_{MPE} (in)	Anvil	Remarks
Analog Anvil,Spindle (With carbide tip)					
114-135	0.09 - 1	0.0001	±0.0002	108°	—

- Flatness: 0.6 µm/0.000024 in (Spindle), 1.3 µm/0.000052 in (Anvil)
- Standard accessories: Spanner (**301336**), 1 pc. (for **114-204**, **101**, **102**, **103**, **104**, **161**, **162**, **114-137**, **121**, **122**)
  Spanner (**200877**), 1 pc. (for **114-105**, **106**, **114-123**, **124**, **165**)
  Setting Standards for V-Anvil Micrometer

DIMENSIONS

Unit: mm

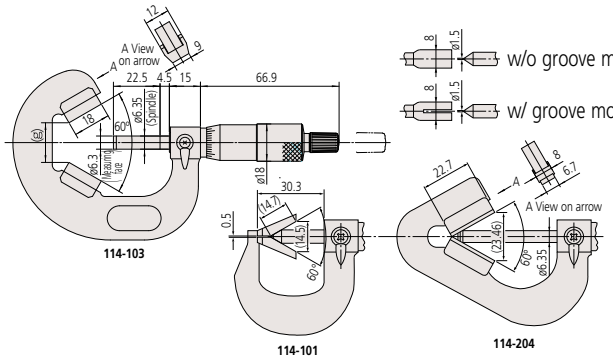

For 3-flute cutting tools

Range (mm)	(g)
10 - 25	6.2
25 - 40	19.14
40 - 55	32.13
55 - 70	45.12
70 - 85	58.11

Mitutoyo reserves the right to change any or all aspects of any product specification, including prices, designs and service content, without notice.

B

Blade Micrometers
SERIES 422 — Non-Rotating Spindle Type

- The anvil and spindle are blade-shaped for measuring the groove diameter of shafts, keyways, and other hard-to-reach features.
- Carbide-tipped measuring faces are available.
- Non-rotating spindle type.
- Equipped with Ratchet Stop for constant measuring force.



Digimatic (**LCD**)
422-230-30



Quickmike Type (**LCD**)
422-411-20

SPECIFICATIONS

Metric

Order No.	Range (mm)	Resolution (mm)	Maximum permissible error J_{MPE} (µm)	Parallelism (µm)	Remark
Digimatic (LCD)					
422-230-30	0 - 25	0.001	±3	3	Type A
422-231-30	25 - 50				
422-232-30	50 - 75				
422-233-30	75 - 100		±4	4	
422-260-30	0 - 25		±3	3	Type B
422-261-30	25 - 50				
422-270-30	0 - 25				Type C
422-271-30					Type D

Inch / Metric

Order No.	Range (in)	Resolution	Maximum permissible error J_{MPE} (in)	Parallelism (in)	Remark
Digimatic (LCD)					
422-330-30	0 - 1	0.00005 in/ 0.001 mm	±0.00015	0.00015	Type A
422-331-30	1 - 2				
422-332-30	2 - 3				
422-333-30	3 - 4		±0.0002	0.0002	
422-360-30	0 - 1		±0.00015	0.00015	Type B
422-361-30	1 - 2				
422-370-30	0 - 1				Type C
422-371-30					Type D

Metric Quickmike type

Order No.	Range (mm)	Resolution (mm)	Maximum permissible error J_{MPE} (µm)	Parallelism (µm)	Remark
Digimatic (LCD)					
422-411-20	0 - 30	0.001	±3	3	Type A
422-412-20	25 - 55				

Inch / Metric Quickmike type

Order No.	Range (in)	Resolution	Maximum permissible error J_{MPE} (in)	Parallelism (in)	Remark
Digimatic (LCD)					
422-421-20	0 - 1.2	0.00005 in/ 0.001 mm	±0.00015	0.00015	Type A

- Battery: SR44 (1 pc.), **938882**, for initial operational checks (standard accessory)
- Battery life: Approx. 2.4 years under normal use (for **422-2XX**, **3XX**)
  Approx. 5 years under normal use (for **422-4XX**)
- Length standard: Electromagnetic rotary sensor (for **422-2XX**, **3XX**)
  Electrostatic capacity absolute sensor (for **422-4XX**)
- Standard accessories: Setting standard, 1 pc. (except for measuring range 0 to 25 mm/0 to 30 mm (0 to 1 in/0 to 1.2 in) models), Spanner (**301336**), 1 pc. (for **422-2XX**, **3XX**)

Note 1: For functional details, refer to page B-7 Please note that these models are not water-proof.
Note 2: A heat shield is provided with Digimatic (LCD) as standard.

MeasurLink® ENABLED
Data Management Software by Mitutoyo

U-WAVE fit

ABSOLUTE™

IP65

Dust- and Water-Protected
TÜVRheinland CERTIFIED
www.tuv.com ID 0000063013

Applicable models:
series 422 Quickmike type

Measurement example



Type and Dimensions

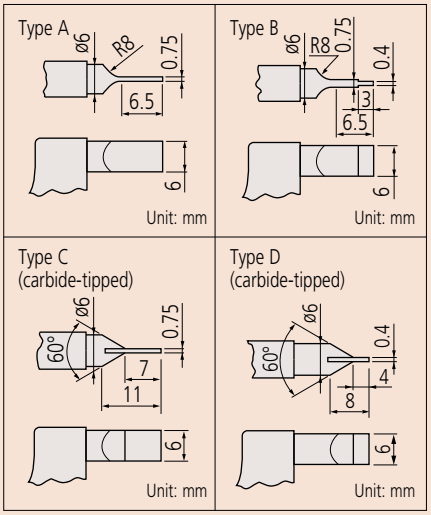

Optional Accessories

Order No.	Type	Description
05CZA662	B	Connecting cable (1 m)
05CZA663	B	Connecting cable (2 m)
06AFM380B	B	USB Input Tool Direct (2 m)
02AZD790B	B	Connecting cables for **U-WAVE-T** (160 mm)
02AZE140B	B	Connecting cables for **U-WAVE-T** For foot switch
264-622	IP67	**U-WAVE-TM***
264-623	Buzzer	**U-WAVE-TM***
264-626	IP67	**U-WAVE-TMB***
264-627	Buzzer	**U-WAVE-TMB***
02AZF310	IP67/ buzzer	Connecting unit for **U-WAVE-TM/TMB***

* Only **series 422** (except for Quickmike type) can be attached.

Mitutoyo reserves the right to change any or all aspects of any product specification, including prices, designs and service content, without notice.

Deviation Between the Anvil and Spindle in the Vertical Direction

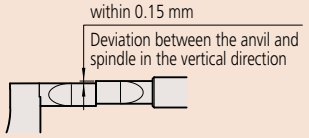

Deviation of 0.15 mm or less* is guaranteed between the anvil and spindle in the vertical direction.

* When the measuring range is 0 to 25 mm

DIMENSIONS

Digimatic models up to 50 mm measuring range

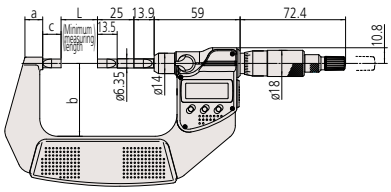

Digimatic models over 50 mm to 100 mm measuring range Unit: mm

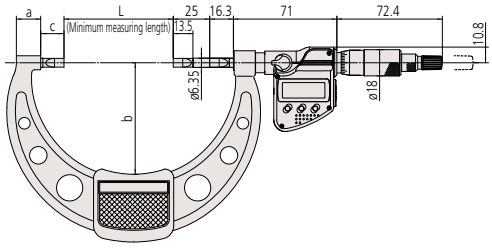

Quickmike type

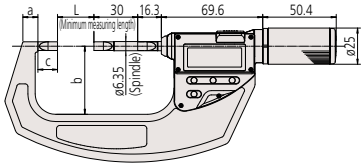

Order No.	L	a	b	C
422-230-30	0	11	31	12.5
422-231-30	25	12.2	50	12.6
422-232-30	50	14.6	57	13
422-233-30	75	16.7	76	16
422-260-30	0	11	31	12.5
422-261-30	25	12.2	50	12.6
422-270-30	0	11	31	12.5
422-271-30				
422-411-20		8.5	36	13.5
422-412-20	25	10.3	47	

Mitutoyo reserves the right to change any or all aspects of any product specification, including prices, designs and service content, without notice.

Blade Micrometers
SERIES 122 — Non-Rotating Spindle Type

- The anvil and spindle are blade-shaped for measuring the groove diameter of shafts, keyways, and other hard-to-reach features.
- Carbide-tipped measuring faces are available.
- Non-rotating spindle type.
- Equipped with Ratchet Stop for constant measuring force.



122-101-10

SPECIFICATIONS

Metric

Order No.	Range (mm)	Graduation (mm)	Maximum permissible error J_{MPE} (µm)	Parallelism (µm)	Remark
Analog					
122-101-10	0 - 25	0.01	±3	3	Type A
122-102-10	25 - 50				
122-103-10	50 - 75				
122-104-10	75 - 100		±4	4	
122-105-10	100 - 125			5	
122-106-10	125 - 150				
122-107-10	150 - 175		±5		
122-108-10	175 - 200				
122-109-10	200 - 225			6	
122-110-10	225 - 250		±6		
122-115-10	250 - 275				
122-116-10	275 - 300				
122-111-10	0 - 25		±3	3	Type B
122-112-10	25 - 50				
Analog (With carbide tip)					
122-161-10	0 - 25	0.01	±3	3	Type C
122-162-10	25 - 50				
122-141-10	0 - 25				Type D
122-142-10	25 - 50				

Inch

Order No.	Range (in)	Graduation (in)	Maximum permissible error J_{MPE} (in)	Parallelism (in)	Remark
Analog					
122-125-10	0 - 1	0.0001	±0.00015	0.00015	Type A
122-126-10	1 - 2				
122-127-10	2 - 3				
122-128-10	3 - 4		±0.0002	0.0002	
122-135-10	0 - 1		±0.00015	0.00015	Type B
122-151-10					Type D

- Standard accessories: Setting standard, 1 pc. (except for measuring range 0 to 25 mm (0 to 1 in) models)
  Spanner (**301336**), 1 pc.

Note: A heat shield is provided with **122-125-10**, **122-135-10**, **122-151-10** as standard.

DIMENSIONS

Analog models up to 25 mm measuring range

Unit: mm

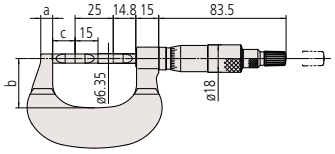

Analog models over 25 mm to 300 mm measuring range

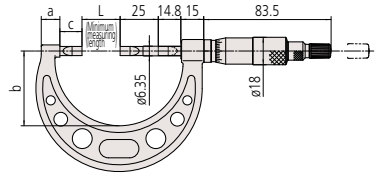

Order No.	L	a	b	C
122-101-10	0	7.8	32	15
122-102-10	25	12.2	49	14.5
122-103-10	50	14.6	60	
122-104-10	75	16.7	79	17.5
122-105-10	100	18.8	94	17.9
122-106-10	125	19.1	106	18.3
122-107-10	150	18.2	118	18.5
122-108-10	175	16.8	130	18.9
122-109-10	200	18	143	17.7
122-110-10	225		156	18.7
122-115-10	250		169	
122-116-10	275		181	

Mitutoyo reserves the right to change any or all aspects of any product specification, including prices, designs and service content, without notice.

Measurement example



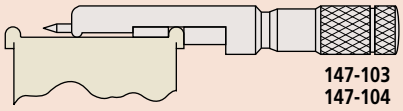

147-103
147-104

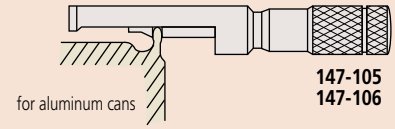

147-105
147-106

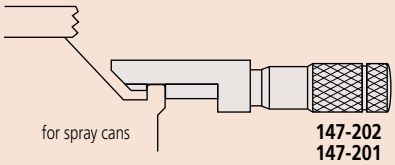

147-202
147-201

Measurement example



Can Seam Micrometers SERIES 147

- Measures the width, height, and depth of can seams.



147-103

SPECIFICATIONS

Metric

Order No.	Range (mm)	Graduation (mm)	Maximum permissible error J_{MPE} (µm)	Remarks
147-103	0 - 13	0.01	±3	—
147-105				for aluminum cans
147-202				for spray cans

Inch

Order No.	Range (in)	Graduation (in)	Maximum permissible error J_{MPE} (in)	Remarks
147-104	0 - 0.5	0.001	±0.00015	—
147-106				for aluminum cans
147-201				for spray cans

- Standard Accessories: Spanner (**200168**), 1 pc. Spanner (**202863**), 1 pc.

DIMENSIONS

Unit: mm

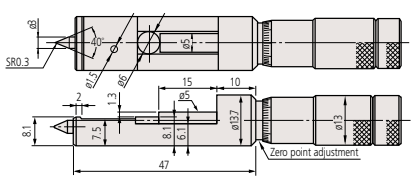

147-103, 147-104

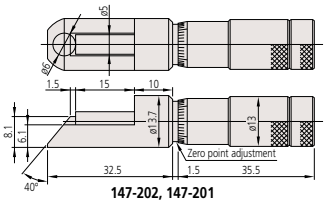

147-202, 147-201

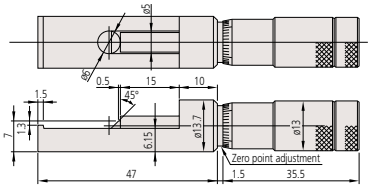

147-105, 147-106

Hub Micrometers SERIES 147

- Measures hub thickness and shoulders inside a bore.
- Measuring faces: Carbide.
- Equipped with Ratchet Stop for constant measuring force.



147-301

SPECIFICATIONS

Metric

Order No.	Range (mm)	Graduation (mm)	Maximum permissible error J_{MPE} (µm)	Flatness (µm)	Parallelism (µm)
147-301	0 - 25	0.01	±2	0.6	3
147-302	25 - 50				
147-303	50 - 75		±3		
147-304	75 - 100				

Inch

Order No.	Range (in)	Graduation (in)	Maximum permissible error J_{MPE} (in)	Flatness (in)	Parallelism (in)
147-351	0 - 1	0.001	±0.0001	0.000024	0.00012
147-352	1 - 2				
147-353	2 - 3				
147-354	3 - 4		±0.00015		

- Standard Accessories: Setting standard, 1 pc. (except for measuring range 0 to 25 mm (0 to 1 in) models), Spanner (**301336**), 1 pc.

DIMENSIONS

Unit: mm

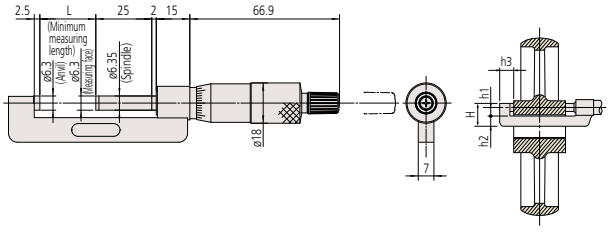

Range (mm)	h_1	h_2	h_3	H	L
0 - 25	6	8.5	13.5	17.5	0
25 - 50	6.5	11	14	20.5	25
50 - 75			13		50
75 - 100					75

Mitutoyo reserves the right to change any or all aspects of any product specification, including prices, designs and service content, without notice.

B

Crimp Height Micrometers SERIES 342

- Measures the height of crimp contacts.
- Equipped with Ratchet Stop for constant measuring force.
- IP65 water/dust protection (Digimatic model).
- Model **342-451-20** is a Quickmike type model with spindle feed of 10 mm per thimble rotation.



Digimatic (**LCD**)
342-271-30



Quickmike type (**LCD**)
342-451-20

SPECIFICATIONS

Metric

Order No.	Range (mm)	Resolution (mm)	Maximum permissible error J_{MPE} (µm)
Digimatic (LCD)			
342-271-30	0 - 20	0.001	±3
Quickmike (LCD)			
342-451-20	0 - 15	0.001	±3

Inch/Metric

Order No.	Range (in)	Resolution	Maximum permissible error J_{MPE} (in)
Digimatic (LCD)			
342-371-30	0 - 0.8	0.00005 in/ 0.001 mm	±0.00015

- Battery: SR44 (1 pc.), **938882**, for initial operational checks (standard accessory)
- Battery life: Approx. 2.4 years under normal use (for **342-271-30**/**342-371-30**)
  Approx. 5 years under normal use (for **342-451-20**)
- Length standard: Electromagnetic rotary sensor (for **342-271-30**/**342-371-30**)
  Electrostatic capacity absolute sensor (for **342-451-20**)
- Standard accessories: Spanner (**301336**), 1 pc. (except for **342-451-20**)

Note: For functional details, refer to page B-7
Optional connecting cable is available only for water-proof type (Digimatic model).

DIMENSIONS

342-271-30 Unit: mm

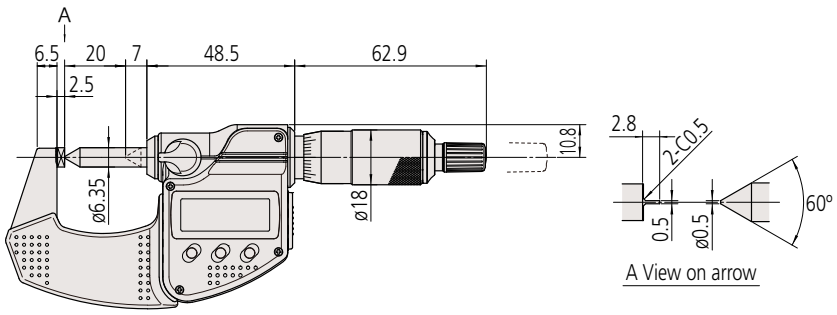

MeasurLink® ENABLED
Data Management Software by Mitutoyo
U-WAVE fit
ABSOLUTE™
IP65
TÜVRheinland CERTIFIED Dust- and Water-Protected www.tuv.com ID 0000040191
TÜVRheinland CERTIFIED Dust- and Water-Protected www.tuv.com ID 0000063013

Measurement example



Anvil and spidle tip detail

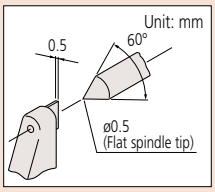

342-271-30, 342-371-30

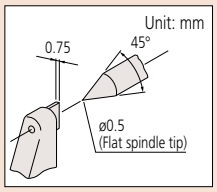

342-451-20

Optional Accessories

Order No.	Type	Description
05CZA662	B	Connecting cable (1 m)
05CZA663	B	Connecting cable (2 m)
06AFM380B	B	USB Input Tool Direct (2 m)
02AZD790B	B	Connecting cables for **U-WAVE-T** (160 mm)
02AZE140B	B	Connecting cables for **U-WAVE-T** For foot switch
264-622	IP67	**U-WAVE-TM***
264-623	Buzzer	**U-WAVE-TM***
264-626	IP67	**U-WAVE-TMB***
264-627	Buzzer	**U-WAVE-TMB***
02AZF310	IP67/ buzzer	Connecting unit for **U-WAVE-TM**/**TMB***

* **342-271-30** and **342-371-30** can be attached.
Not available for **342-451-20**.

Mitutoyo reserves the right to change any or all aspects of any product specification, including prices, designs and service content, without notice.

Crimp Height Micrometers SERIES 112,142

- Measures the height of crimp contacts.
- Equipped with Ratchet Stop for constant measuring force.



112-401

Anvil and spidle tip detail

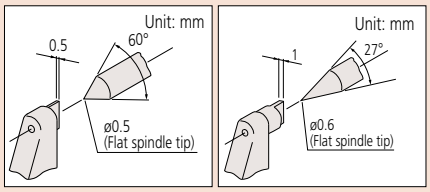

112-401 142-402, 142-403

SPECIFICATIONS

Metric

Order No.	Range (mm)	Graduation (mm)	Maximum permissible error J_{MPE} (µm)
Mechanical counter model			
142-402	0 - 25	0.01	±3
142-403		0.001	

Metric

Order No.	Range (mm)	Graduation (mm)	Maximum permissible error J_{MPE} (µm)
Analog			
112-401	0 - 25	0.01	±3

- Standard accessories: Spanner (**301336**), 1 pc.

Mitutoyo reserves the right to change any or all aspects of any product specification, including prices, designs and service content, without notice.

B

"Uni-Mike"
SERIES 317, 117 — Interchangeable Anvil Type

- A selection of interchangeable anvils (rod anvils and V-anvils) enables measurement of tube thickness, rivet head height and similar features just by replacing the anvil to suit.
- IP65 water/dust protection (**series 317**).
- Equipped with Ratchet Stop for constant measuring force.



317-251-30

SPECIFICATIONS

Metric

Order No.	Range (mm)	Resolution (mm)	Spindle feed error (µm)	Flatness (µm)	Parallelism (µm)
Digimatic (LCD)					
317-251-30	0 - 25	0.001	3	0.6 (Spindle face)/ 2 (Anvil face)	3
317-252-30	25 - 50				

Inch / Metric

Order No.	Range (in)	Resolution	Spindle feed error (in)	Flatness (in)	Parallelism (in)
Digimatic (LCD)					
317-351-30	0 - 1	0.00005 in/0.001 mm	0.00015	0.000024 (Spindle face)/ 0.00008 (Anvil face)	0.00012
317-352-30	1 - 2				

- Battery: SR44 (1 pc.), **938882**, for initial operational checks (standard accessory)
- Battery life: Approx. 2.4 years under normal use
- Length standard: Electromagnetic rotary sensor
- Standard accessories: Setting standard, 1 pc. (except for measuring range 0 to 25 mm (0 to 1 in) models)
  Spanner (**301336**), 1 pc.

Note: For functional details, refer to page B-7
Optional connecting cable is available only for water-proof type (Digimatic model).



117-101

SPECIFICATIONS

Metric

Order No.	Range (mm)	Graduation (mm)	Spindle feed error (µm)	Flatness (µm)	Parallelism (µm)
Analog					
117-101	0 - 25	0.01	3	0.6 (Spindle face)/ 2 (Anvil face)	3
117-102	25 - 50				

Inch

Order No.	Range (in)	Graduation (in)	Spindle feed error (in)	Flatness (in)	Parallelism (in)
Analog					
117-107	0 - 1	0.0001	0.00015	0.000024 (Spindle face)/ 0.00008 (Anvil face)	0.00012
117-108	1 - 2				

- Standard accessories: Setting standard, 1 pc. (except for measuring range 0 to 25 mm (0 to 1 in) models), Spanner (**200877**), 1 pc.

DIMENSIONS

Unit: mm

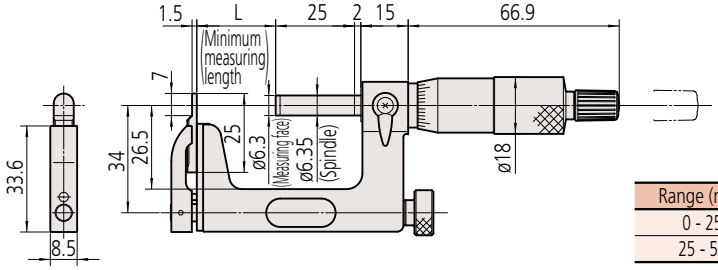

Range (mm)	L
0 - 25	0
25 - 50	25

MeasurLink® ENABLED
Data Management Software by Mitutoyo

U-WAVE fit

IP65

Dust- and Water-Protected
TÜVRheinland CERTIFIED
www.tuv.com ID 0000040191

Applicable models: **series 317**

Measurement example

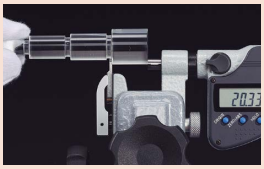



Optional Accessories

Order No.	Type	Description
05CZA662	B	Connecting cable (1 m)
05CZA663	B	Connecting cable (2 m)
06AFM380B	B	USB Input Tool Direct (2 m)
02AZD790B	B	Connecting cables for **U-WAVE-T** (160 mm)
02AZE140B	B	Connecting cables for **U-WAVE-T** For foot switch
264-622	IP67	**U-WAVE-TM**
264-623	Buzzer	**U-WAVE-TM**
264-626	IP67	**U-WAVE-TMB**
264-627	Buzzer	**U-WAVE-TMB**
02AZF310	IP67/ buzzer	Connecting unit for **U-WAVE-TM/TMB**

Unit: mm

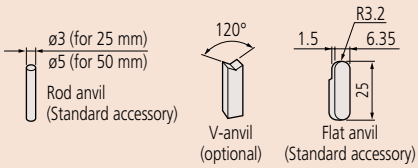

Order No.	Item
201216	Flat anvil (standard accessory)
201217	Rod anvil (standard accessory for **117-101/ 117-107/317-251-30/317-351-30**)
201379	Rod anvil (standard accessory for **117-102/ 117-108/317-252-30/317-352-30**)
201218	V-anvil (optional)
950758	Round Base for **series 117**, for 0-25 mm ø58×14.2 mm (optional)

Mitutoyo reserves the right to change any or all aspects of any product specification, including prices, designs and service content, without notice.

Limit Micrometers
SERIES 113

Measurement example

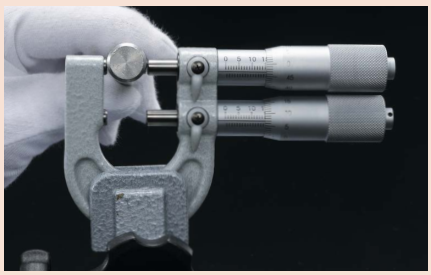

- Dual-spindle design enables use as a GO/±NG gage by setting upper and lower limits.
- Measuring faces: Carbide.



113-102

SPECIFICATIONS

Metric

Order No.	Range (mm)	Graduation (mm)	Maximum permissible error J_{MPE} (µm)	Flatness (µm)	Parallelism (µm)
113-102	0 - 25	0.01	±3	0.6	3
113-103	25 - 50				

- Standard Accessories: Setting standard, 1 pc. (except for measuring range 0 to 25 mm and 0 to 1 in models)
  Spanner (**200877**), 1 pc.

DIMENSIONS

Unit: mm

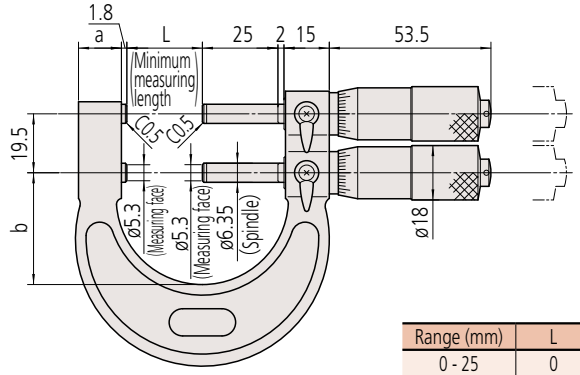

Range (mm)	L	a	b
0 - 25	0	14.2	23
25 - 50	25		37

Mitutoyo reserves the right to change any or all aspects of any product specification, including prices, designs and service content, without notice.

B

Indicating Micrometers SERIES 510

- Suitable for pass/fail judgement of mass-produced components.
- Easy to use when operating one-handed due to retractable anvil.
- In the 25 mm measuring range, the model lineup offers a choice of left or right positioning of the anvil-retraction button.
- Greatly improved accuracy: indication error and graduation of 1 µm.
- IP protection level: 54, coolant-splash resistant during grinding process.



510-121

SPECIFICATIONS

Metric

Order No.	Range (mm)	Spindle feed error (µm)	Flatness (µm)	Parallelism (µm)	Dispersion of indication (µm)	Dial indication accuracy (µm)	Indicating range (mm)	Graduation (mm)	Dial graduation (mm)	Measuring force (N)	Anvil retraction button	Mass (g)
510-121	0 - 25	3	0.3	0.6	0.4	1	±0.06	0.001	0.001	5 - 10	Right side	520

Inch

Order No.	Range (in)	Spindle feed error (in)	Flatness (in)	Parallelism (in)	Dispersion of indication (in)	Dial indication accuracy (in)	Indicating range (in)	Graduation (in)	Dial graduation (in)	Measuring force (N)	Anvil retraction button	Mass (g)
510-131	0 - 1	0.00015	0.000012	0.000024	0.00002	0.00005	±0.0023	0.0001	0.00005	5 - 10	Right side	520

- Standard Accessories: Spanner (**200154**), 1 pc.

DIMENSIONS

Up to 25 mm measuring range (anvil-retraction button on the right side) Unit: mm

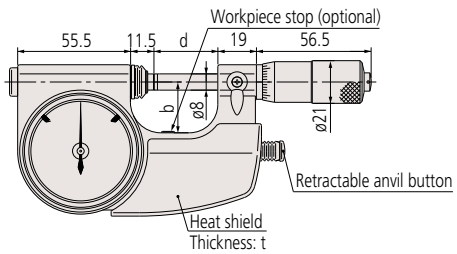

Range (mm)	b	d	t
0 - 25	25	31.5	16.4

IP54

Measurement example



Workpiece Stop (optional)

- Produces more stable measurement.
- Three types are available to suit workpieces of different sizes.

Unit: mm

Range	A	B
Workpiece stop A **04AZA124**	ø16	23
Workpiece stop B **04AZA125**	ø14	20.5
Workpiece stop C **04AZA126**	ø14	15

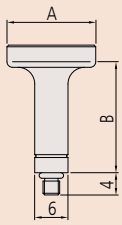

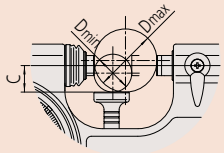

Dmin: Minimum measurable diameter
Dmax: Maximum measurable diameter
C: Distance from the center of the workpiece to the upper surface of the workpiece stop

- Order No. **510-121**, **510-141**, **510-131**, **510-151** Unit: mm

	Dmin	Dmax	C
Workpiece stop A	N/A	N/A	N/A
Workpiece stop B	4	16	5.0
Workpiece stop C	15	25	10.5

- **510-122** and **510-132**

	Dmin	Dmax	C
Workpiece stop A	25	37	15.5
Workpiece stop B	30	42	18.0
Workpiece stop C	41	50	23.5

- **510-123** and **510-133**

	Dmin	Dmax	C
Workpiece stop A	50	61	27.5
Workpiece stop B	54	66	30.0
Workpiece stop C	65	75	35.5

- **510-124** and **510-134**

	Dmin	Dmax	C
Workpiece stop A	75	87	40.5
Workpiece stop B	80	92	43.0
Workpiece stop C	91	100	48.2

Mitutoyo reserves the right to change any or all aspects of any product specification, including prices, designs and service content, without notice.

Measurement example





510-141

SPECIFICATIONS

Metric

Order No.	Range (mm)	Spindle feed error (µm)	Flatness (µm)	Parallelism (µm)	Dispersion of indication (µm)	Dial indication accuracy (µm)	Indicating range (mm)	Graduation (mm)	Dial graduation (mm)	Measuring force (N)	Anvil retraction button	Mass (g)
510-141	0 - 25	3	0.3	0.6	0.4	1	±0.06	0.001	0.001	5 - 10	Left side	530
510-122	25 - 50											670
510-123	50 - 75			1								820
510-124	75 - 100											970

Inch

Order No.	Range (in)	Spindle feed error (in)	Flatness (in)	Parallelism (in)	Dispersion of indication (in)	Dial indication accuracy (in)	Indicating range (in)	Graduation (in)	Dial graduation (in)	Measuring force (N)	Anvil retraction button	Mass (g)
510-151	0 - 1	0.00015	0.000012	0.000024	0.00002	0.00005	±0.0023	0.0001	0.00005	5 - 10	Left side	530
510-132	1 - 2											670
510-133	2 - 3			0.00004								820
510-134	3 - 4											970

• Standard Accessories: Setting standard, 1 pc. (except for measuring range 0 to 25 mm (0 to 1 in) models)
Spanner (**200154**), 1 pc.

DIMENSIONS

Up to 25 mm measuring range
(anvil-retraction button on the left side)

Over 25 mm measuring range
(anvil-retraction button on the left side)

Unit: mm

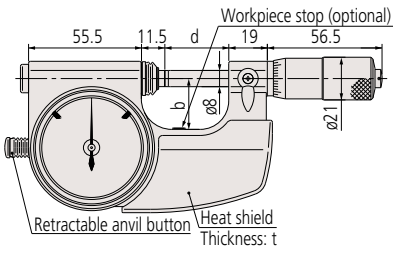

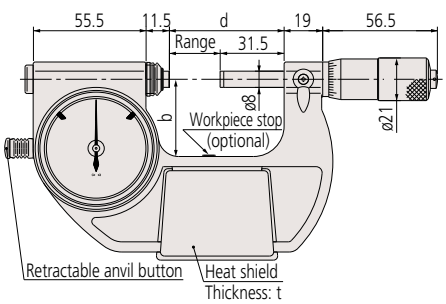

Range (mm)	b	d	t
0 - 25	25	31.5	16.4
25 - 50	38	56.5	16
50 - 75	50	81.5	
75 - 100	63	106.5	

Mitutoyo reserves the right to change any or all aspects of any product specification, including prices, designs and service content, without notice.

IP54

Dial Snap Meters
SERIES 523

- Suitable for quick pass/fail inspection of mass-produced components.
- Greatly improved accuracy: indication accuracy and graduation of 1 µm.
- IP protection level: 54, coolant-splash resistant during grinding process.
- Hard-coated crystal: enhanced oil and scratch resistance.

B



523-121

Measurement example



SPECIFICATIONS

Metric

Order No.	Range (mm)	Dial graduation (mm)	Measuring force (N)	Flatness (µm)	Parallelism (µm)	Dispersion of indication (µm)	Dial indication accuracy (µm)	Indicating range (mm)	Mass (g)
523-121	0 - 25	0.001	5 - 10	0.3	0.6	0.4	1	±0.06	740
523-122	25 - 50								840
523-123	50 - 75				1				950
523-124	75 - 100								1080

Inch

Order No.	Range (in)	Dial graduation (in)	Measuring force (N)	Flatness (in)	Parallelism (in)	Dispersion of indication (in)	Dial indication accuracy (in)	Indicating range (in)	Mass (g)
523-131	0 - 1	0.00005	5 - 10	0.000012	0.000024	0.00002	0.00005	±0.0023	740
523-132	1 - 2								840
523-133	2 - 3				0.00004				950
523-134	3 - 4								1080

DIMENSIONS

Unit: mm

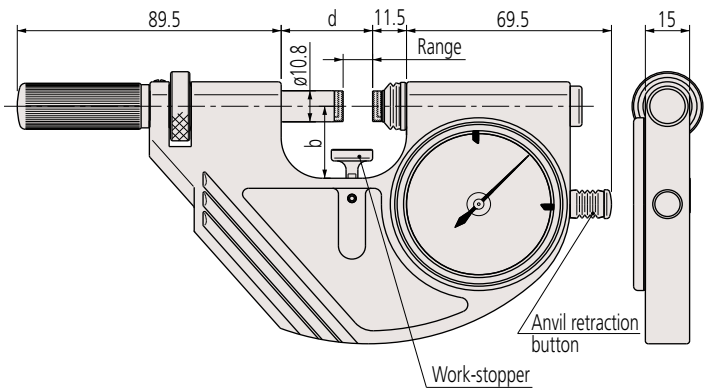

Range (mm)	b	d
0 - 25	25	31
25 - 50	35	56
50 - 75	47	81
75 - 100	60	106

Mitutoyo reserves the right to change any or all aspects of any product specification, including prices, designs and service content, without notice.

Snap Meters
SERIES 523

- Suited for the measurement of mass-produced parts.
- Various indicators (optional) are available to suit accuracy and resolution requirements.
- Measuring faces: Carbide.

Mounting example



ABS Digimatic Indicator



Linear Gage and counter

Typical Indicators Used with Gage

- ID-C (0.001 mm)/**543-390B**
- LGF-L (0.0001 mm)/**542-181** & Counter **542-015**



523-141
(Indicator: optional)

SPECIFICATIONS

Metric

Order No.	Range (mm)	Anvil movement (mm)	Measuring force* (N)	Repeatability of indication (µm)	Flatness (µm)	Parallelism (µm)	Mass (g)
523-141	0 - 25	2	5 - 10	0.4	0.3	0.6	710
523-142	25 - 50						810
523-143	50 - 75					1	920
523-144	75 - 100						1050

Inch

Order No.	Range (in)	Anvil movement (in)	Measuring force* (N)	Repeatability of indication (in)	Flatness (in)	Parallelism (in)	Mass (g)
523-151	0 - 1	0.078	5 - 10	0.00002	0.000012	0.000024	710
523-152	1 - 2						810
523-153	2 - 3					0.00004	920
523-154	3 - 4						1050

* Measuring force before an indicator is mounted.
Measured at the position where the anvil is retracted by 1 mm from the free position without installing the indicator.

DIMENSIONS

Unit: mm

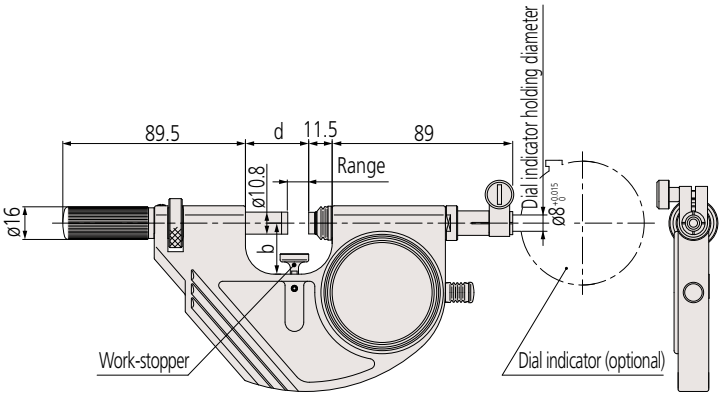

Range (mm)	b	d
0 - 25	25	31
25 - 50	35	56
50 - 75	47	81
75 - 100	60	106

Mitutoyo reserves the right to change any or all aspects of any product specification, including prices, designs and service content, without notice.

Groove Micrometers SERIES 146

- Flanged spindle and anvil for measuring width and location of grooves inside bores and tubes.
- Two-directional ratchet stop.
- For ID and OD (except for 0 - 25 mm) measurement, a master gage is required for adjusting the reference point.
- Non-rotating spindle.



146-221

Measurement example

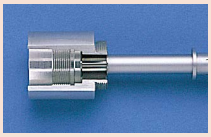

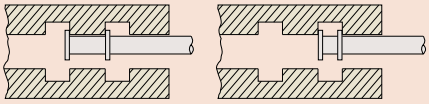

SPECIFICATIONS

Metric

Order No.	Range Inside (mm)	Range Outside (mm)	Graduation (mm)	Maximum permissible error J_{MPE} (µm)	Parallelism (µm)	Flange (mm)
146-221	1.6 - 26.5	0 - 25	0.01	±10	10	ø6.35
146-222						ø12.7
146-223	26.5 - 51.5	25 - 50				
146-224	51.5 - 76.5	50 - 75				
146-225	76.5 - 101.5	75 - 100				

Inch

Order No.	Range Inside (in)	Range Outside (in)	Graduation (in)	Maximum permissible error J_{MPE} (in)	Parallelism (in)	Flange (in)
146-231	0.055 - 1.05	0 - 1	0.001	±0.0004	0.0004	ø0.25
146-232						ø0.5
146-233	1.05 - 2.05	1 - 2				
146-234	2.05 - 3.05	2 - 3				
146-235	3.05 - 4.05	3 - 4				

- Standard accessories: Spanner (**301336**), 1 pc.

DIMENSIONS

Unit: mm

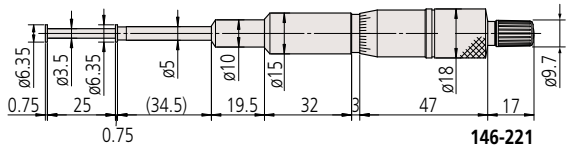

146-221

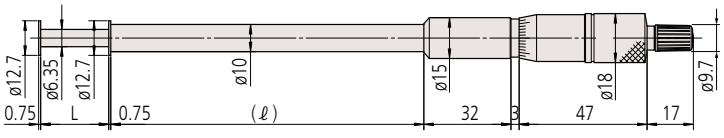

146-222, 146-223, 146-224, 146-225

L	(ℓ)
25	(115)
50	(90)
75	(65)
100	(40)

Mitutoyo reserves the right to change any or all aspects of any product specification, including prices, designs and service content, without notice.

QUICKmini SERIES 700

- Lightweight, compact, palm-sized device.
- Measurement of small, thin workpieces is possible by only a single operation.
- Electromagnetic induction type ABSOLUTE encoder is adopted.
- Built-in ABS (absolute) scale requires no zero-set every time the power is turned on. In addition, reliability has improved by eliminating overspeed errors.



700-119-30

Measurement example



Functions

ABS measurement function:
after a data is displayed, next measurement can be performed without zero-setting. Also, the ABS origin point can be changed with ORIGIN switch.
INC measurement function:
clears the displayed data at any point. The comparative measurement can be easily performed.
Low battery alarm:
notifies that the battery is worn with "B" mark before becoming immeasurable. Thus, the timing for battery replacement can be confirmed in advance.

Typical applications:

- Measurement of small workpieces:
Pearl, jewel, engine tappet shim, screws.
- Measurement of thin workpieces:
Printing paper, polyethylene bags, sheet material, noodles and other food products, medium substrate, foil, thin plate, filter cloth and other medical supplies.
- Measurement of thin lines and bars: Fishing line, dental reamers, spaghetti, drill for PCBs, wiring.

SPECIFICATIONS

Metric

Order No.	Range (mm)	Resolution (mm)	Accuracy* (mm)	Mass (g)
700-119-30	0 - 12	0.01	±0.02	100

Inch / Metric

Order No.	Range (in)	Resolution	Accuracy* (in)	Mass (g)
700-118-30	0 - 0.5	0.0005 in/0.01 mm	±0.001	100

- Battery: SR44 (1 pc.), **938882**, for initial operational checks (standard accessory)
- Battery life: Approx. 5 years under normal use

* Excluding quantizing error of ±1 count

DIMENSIONS

Unit: mm

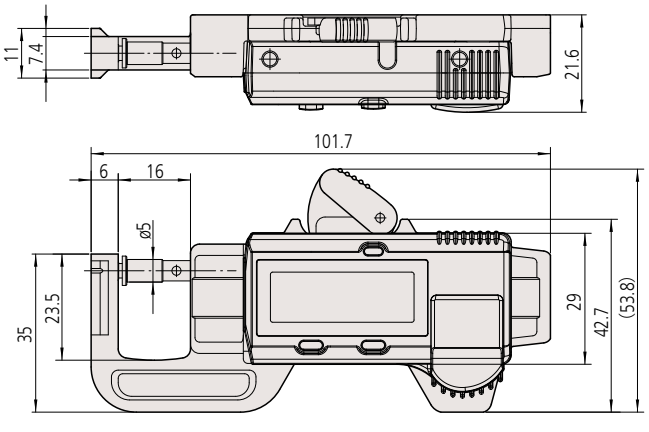

700-119-30

Mitutoyo reserves the right to change any or all aspects of any product specification, including prices, designs and service content, without notice.

Telescoping Gage Set
SERIES 155

- A spring-loaded plunger expands within a bore (or groove) and is locked in place allowing measurement of diameter (or width) with an outside micrometer after extraction.



155-905

Typical application

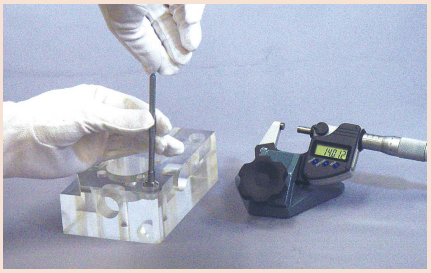

SPECIFICATIONS

Metric

Order No.	Range (mm)
6-gage Set	
155-905	8 - 150
Gages included	
155-127	8 - 12.7
155-128	12.7 - 19
155-129	19 - 32
155-130	32 - 54
155-131	54 - 90
155-132	90 - 150

Inch

Order No.	Range (in)
6-gage Set	
155-903	0.313 - 6
Gages included	
155-121	0.313 - 0.5
155-122	0.5 - 0.75
155-123	0.75 - 1.25
155-124	1.25 - 2.125
155-125	2.125 - 3.5
155-126	3.5 - 6

DIMENSIONS

Unit: mm

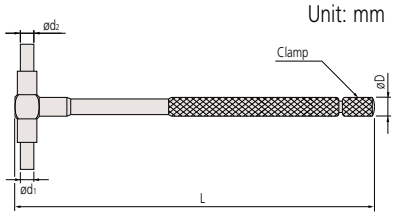

Range (mm)	L	øD	ød1	ød2
8 - 12.7	110	5	4	3
12.7 - 19		5.5	5	3.5
19 - 32				
32 - 54	150	8	7.5	6
54 - 90				
90 - 150				

Mitutoyo reserves the right to change any or all aspects of any product specification, including prices, designs and service content, without notice.

Setting Standards for Outside Micrometers SERIES 167

Typical application



- Used for adjusting the reference point of outside micrometers.



167-108

Micrometer Inspection Gauge Block Set

Refer to page E-11 for details.

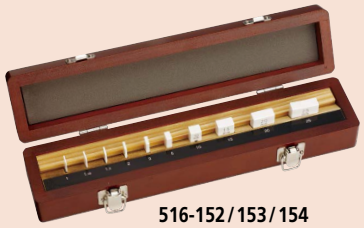

516-152 / 153 / 154



Micro Checker (holder only)
516-607

SPECIFICATIONS and DIMENSIONS

167-101 to **167-103**
167-141 to **167-143**

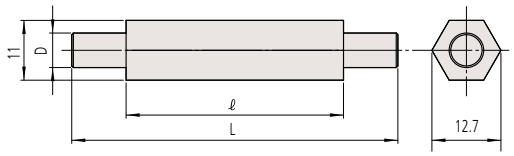

Unit: mm

Metric

Order No.	Length <L> (mm)	Accuracy (µm)	Parallelism (µm)	Flatness (µm)	ℓ (mm)	Diameter <D> (mm)
167-101	25	±1.5	2.0	0.3	18	6.35
167-102	50	±2.0			40	
167-103	75	±2.5				

Inch

Order No.	Length <L> (in)	Accuracy (in)	Parallelism (in)	Flatness (in)	ℓ (mm)	Diameter <D> (in)
167-141	1	±0.00005	0.00008	0.000012	18	0.25
167-142	2	±0.0001			40	
167-143	3	±0.0001				

167-104 to **167-107**
167-144 to **167-147**

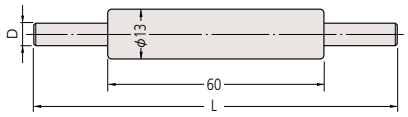

Unit: mm

Metric

Order No.	Length <L> (mm)	Accuracy (µm)	Parallelism (µm)	Flatness (µm)	Diameter <D> (mm)
167-104	100	±3	2.0	0.3	7.9
167-105	125	±3.5			
167-106	150	±4			
167-107	175	±4.5			

Inch

Order No.	Length <L> (in)	Accuracy (in)	Parallelism (in)	Flatness (in)	Diameter <D> (in)
167-144	4	±0.0001	0.00008	0.000012	0.31
167-145	5	±0.00015			
167-146	6				
167-147	7				

167-108 to **167-119**
167-148 to **167-159**

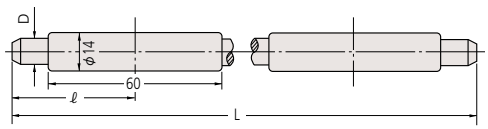

Unit: mm

Metric

Order No.	Length <L> (mm)	Accuracy (µm)	Parallelism (µm)	Flatness (µm)	ℓ (mm)	Diameter <D> (mm)
167-108	200	±5.0	2.0	0.3	47	9.4
167-109	225	±5.5			47	
167-110	250	±6.0			52	
167-111	275	±6.5			57	
167-112	300	±7			64	
167-113	325	±7.5			69	
167-114	350	±8			74	
167-115	375	±8.5			80	
167-116	400	±9			85	
167-117	425	±9.5			90	
167-118	450	±10			95	
167-119	475	±10.5			101	

Inch

Order No.	Length <L> (in)	Accuracy (in)	Parallelism (in)	Flatness (in)	ℓ (mm)	Diameter <D> (in)
167-148	8	±0.00015	0.00008	0.000012	47	0.37
167-149	9	±0.0002			47	
167-150	10	±0.0002			52	
167-151	11	±0.0002			57	
167-152	12	±0.00025			64	
167-153	13	±0.00025			69	
167-154	14	±0.00025			74	
167-155	15	±0.00025			80	
167-156	16	±0.00025			85	
167-157	17	±0.00025			90	
167-158	18	±0.00025			95	
167-159	19	±0.0003			101	

Mitutoyo reserves the right to change any or all aspects of any product specification, including prices, designs and service content, without notice.

Setting Standards for Outside Micrometers SERIES 167

167-120 to **167-404**
167-160 to **167-180**

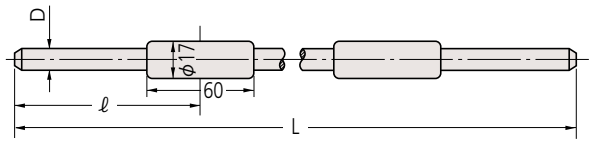

Unit: mm

B

Metric

Order No.	Length <L> (mm)	Accuracy (μm)	Parallelism (μm)	Flatness (μm)	ℓ (mm)	Diameter <D> (mm)
167-120	500	±11			106	
167-121	525	±11.5			112	
167-122	550	±12			117	
167-123	575	±12.5			122	
167-124	600	±13			128	
167-125	625	±13.5			133	
167-126	650	±14			138	
167-127	675	±14.5			142	
167-128	700	±15			147	
167-129	725	±15.5			153	
167-130	750	±16			158	
167-131	775	±16.5			164	
167-132	800	±17			170	
167-133	825	±17.5			175	
167-134	850	±18			180	
167-135	875	±18.5			185	
167-136	900	±19			191	
167-137	925	±19.5			196	
167-138	950	±20			201	
167-139	975	±20.5			207	
167-140	1000	±21			211	
167-365	1025	±21.5			217	
167-366	1050	±22			222	
167-367	1075	±22.5			227	
167-368	1100	±23			232	
167-369	1125	±23.5			238	
167-370	1150	±24			243	
167-371	1175	±24.5			248	
167-372	1200	±25			254	
167-373	1225	±25.5			259	
167-374	1250	±26	2.0	0.3	264	11.9
167-375	1275	±26.5			269	
167-376	1300	±27			275	
167-377	1325	±27.5			280	
167-378	1350	±28			285	
167-379	1375	±28.5			291	
167-380	1400	±29			296	
167-381	1425	±29.5			301	
167-382	1450	±30			306	
167-383	1475	±30.5			312	
167-384	1500	±31			317	
167-385	1525	±31.5			322	
167-386	1550	±32			328	
167-387	1575	±32.5			333	
167-388	1600	±33			338	
167-389	1625	±33.5			343	
167-390	1650	±34			349	
167-391	1675	±34.5			354	
167-392	1700	±35			359	
167-393	1725	±35.5			364	
167-394	1750	±36			370	
167-395	1775	±36.5			375	
167-396	1800	±37			380	
167-397	1825	±37.5			386	
167-398	1850	±38			391	
167-399	1875	±38.5			396	
167-400	1900	±39			401	
167-401	1925	±39.5			407	
167-402	1950	±40			412	
167-403	1975	±40.5			417	
167-404	2000	±41			423	

Inch

Order No.	Length <L> (in)	Accuracy (in)	Parallelism (in)	Flatness (in)	ℓ (mm)	Diameter <D> (in)
167-160	20	±0.0003			106	
167-161	21	±0.0003			112	
167-162	22	±0.0003			117	
167-163	23	±0.0003			122	
167-164	24	±0.0003			128	
167-165	25	±0.00035			133	
167-166	26	±0.00035			138	
167-167	27	±0.00035			142	
167-168	28	±0.00035			147	
167-169	29	±0.00035			153	
167-170	30	±0.00035	0.00008	0.000012	158	0.47
167-171	31	±0.00035			164	
167-172	32	±0.00035			170	
167-173	33	±0.00035			175	
167-174	34	±0.00035			180	
167-175	35	±0.00035			185	
167-176	36	±0.00035			191	
167-177	37	±0.0004			196	
167-178	38	±0.0004			201	
167-179	39	±0.0004			207	
167-180	40	±0.0004			211	

Note: Available up to 79 in

Mitutoyo reserves the right to change any or all aspects of any product specification, including prices, designs and service content, without notice.

Setting Standards for Screw Thread Micrometers SERIES 167

Typical application

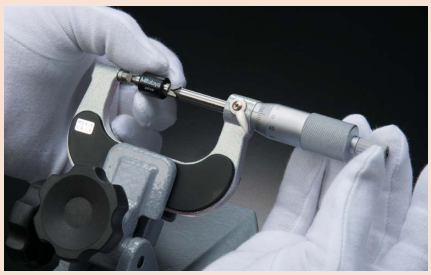

- Used for accurately setting screw thread micrometers at the start or end of the measuring range.



167-264
(60° screw)

Metric

Order No.	Length (mm)	Accuracy (µm)
Metric (unified) θ=60°		
167-261	25	±4
167-262	50	±5
167-263	75	±6
167-264	100	±7
167-265	125	±8
167-266	150	±9
167-267	175	±10
167-268	200	±11
167-269	225	±12
167-270	250	±13
167-271	275	±14
Whitworth θ=55°		
167-272	25	±4
167-273	50	±5
167-274	75	±6
167-275	100	±7
167-276	125	±8
167-277	150	±9
167-278	175	±10
167-279	200	±11
167-280	225	±12
167-281	250	±13
167-282	275	±14

Inch

Order No.	Length <L> (in)	Accuracy (in)
Metric (unified) θ=60°		
167-294	1	±0.00015
167-295	2	±0.0002
167-296	3	±0.00025
167-297	4	±0.0003
167-298	5	±0.00035
167-299	6	±0.0004
Whitworth θ=55°		
167-283	1	±0.00015
167-284	2	±0.0002
167-285	3	±0.00025
167-286	4	±0.0003
167-287	5	±0.00035
167-288	6	±0.0004

Setting Standards for V-Anvil Micrometers SERIES 167

Typical application



- Specially designed for accurately setting V-anvil micrometers.



167-329

Metric

Order No.	Length (mm)	Accuracy (µm)	Type
167-327	5	±2	Plug
167-328	10		
167-329	25		
167-330	40	±3	Ring
167-331	55		
167-332	70		
167-333	85		
167-334	100	±5	
167-335	115		
167-336	130		

Inch

Order No.	Length <L> (in)	Accuracy (in)	Type
167-337	0.2	±0.0001	Plug
167-338	0.4		
167-339	1		
167-340	1.6	±0.00015	Ring

Mitutoyo reserves the right to change any or all aspects of any product specification, including prices, designs and service content, without notice.

Optical Parallels
SERIES 157

- Designed to inspect parallelism and flatness of measuring faces of micrometers. For details, refer to "Quick Guide to Precision Measuring Instruments" on page B-81.
- Each set consists of 4 sizes to aid in testing parallelism at various angular positions of the micrometer spindle.



157-903

Typical application



SPECIFICATIONS

Metric

Order No.	Range of micrometer to be checked (mm)	Sizes of parallels included in set (mm)	Diameter (mm)	Flatness (µm)	Parallelism (µm)	Remarks (mm)
157-903	0 - 25	12.00, 12.12, 12.25, 12.37	ø30	0.1	0.2	For 25
157-904	25 - 50	25.00, 25.12, 25.25, 25.37				For 50

Inch

Order No.	Range of micrometer to be checked (in)	Sizes of parallels included in set (in)	Diameter (mm)	Flatness (µm)	Parallelism (µm)	Remarks (mm)
157-901	0 - 1	0.5000, 0.5062, 0.5125, 0.5187	ø30	0.1	0.2	For 25
157-902	1 - 2	1.0000, 1.0062, 1.0125, 1.0187				For 50

Note: Also available individually, using the following Order No.

Metric

Order No.	Thickness (mm)
157-101	12.00
157-102	12.12
157-103	12.25
157-104	12.37

Metric

Order No.	Thickness (mm)
157-105	25.00
157-106	25.12
157-107	25.25
157-108	25.37

Inch

Order No.	Thickness (in)
157-109	0.5000
157-110	0.5062
157-111	0.5125
157-112	0.5187

Inch

Order No.	Thickness (in)
157-113	1.0000
157-114	1.0062
157-115	1.0125
157-116	1.0187

Optical Flats
SERIES 158

- Used for inspecting the flatness of very flat surfaces. For details, refer to "Quick Guide to Precision Measuring Instruments" on page B-81.



158-118

Typical application

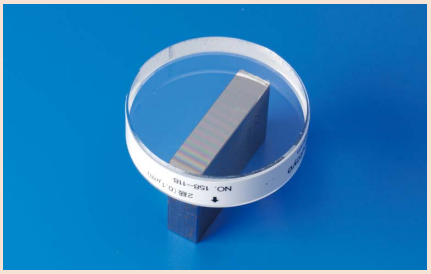

SPECIFICATIONS

Metric

Order No.	Thickness (mm)	Diameter (mm)	Flatness grade (µm)
158-117	12	45	0.2
158-118			0.1
158-119	15	60	0.2
158-120			0.1

Inch

Order No.	Thickness (in)	Diameter (in)	Flatness grade (in)
158-122	0.5	1.8	0.000004
158-124	0.6	2.4	

Mitutoyo reserves the right to change any or all aspects of any product specification, including prices, designs and service content, without notice.

3-Wire Units
SERIES 313

Measurement example

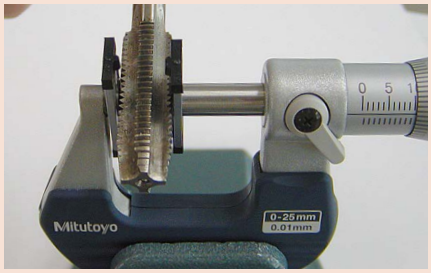

- Attached to the measuring faces of both the spindle and anvil of the micrometer, enables measurement of pitch diameter of screw threads.
- Determination of the pitch diameter: refer to "Quick Guide to Precision Measuring Instruments" on page B-80.



952141

SPECIFICATIONS

Order No. (One pair) (Support spindle dia.) 6.35 mm (0.25 in)	Wire dia. (mm)	Accuracy of wire diameter (mm)	Pitch		
			Metric thread (mm)	Unified thread (threads per inch)	Whitworth thread (threads per inch)
952131	0.170	±0.002	0.2, 0.25, 0.3	80	—
952132	0.195		0.35	72	—
952133	0.220		0.4	64	—
952134	0.250		0.45	56	60
952135	0.290		0.5	48	48
952136	0.335		0.6	44, 40	40
952137	0.390		0.7	36	36
952138	0.455		0.75, 0.8	32	32
952139	0.530		0.9	28	28, 26
952140	0.620		1.0	24	24, 22
952141	0.725		1.25	20	20, 19, 18
952142	0.895		1.5	18, 16	16
952143	1.100		1.75, 2.0	14, 13, 12	14, 12
952144	1.350		2.5	11, 10	11, 10
952145	1.650		3.0	9, 8	9, 8
952146	2.050		3.5	7	7
952147	2.550		4, 4.5	6	6
952148	3.200		5, 5.5, 6	5, 4.5	5, 4.5

3-Wire Units set

Order No.	Set	Wire dia. (mm)	Support spindle dia. (mm)
313-101	18	0.170 - 3.200	6.35

Note 1: Special-specification 3-wire units with a wire diameter other than those listed above (ø0.15 mm or more) can also be made to order.
Note 2: Due to potential obstruction, the 3-wire unit cannot be used with screws having an external diameter exceeding ø50 mm.

Micrometer Oil

- Lubrication and rust-prevention oil.



207000
(32 ml)

SPECIFICATIONS

Order No.	Product name	Remarks
207000*	Micrometer oil	Grease (32 ml)

* Not available in certain countries and regions.

Mitutoyo reserves the right to change any or all aspects of any product specification, including prices, designs and service content, without notice.

Color-Coded Ratchet and Speeder Covers

- Ratchet and speeder covers in a choice of seven colors for use in instrument identification control schemes: red, blue, yellow, green, brown, black and gray.

Ratchet



Speeder



Mounting example



Standard outside micrometers

SPECIFICATIONS

Analog type: 0 to 300 mm

Order No.		Color	Material
Ratchet	Speeder		
04GZA239	**04GAA260**	Gray	Plastic
985056	**301708**	Black	
985061	**301709**	Red	
985081	**301713**	Blue	
985071	**301711**	Yellow	
985076	**301712**	Green	
985066	**301710**	Brown	
950700	—	Gray	Steel

Analog / Digimatic types: 300 to 1000 mm

Order No.		Color	Material
Ratchet	Speeder		
04GZA243	**04GAA260**	Gray	Plastic
—	**301708**	Black	
—	**301709**	Red	
—	**301713**	Blue	
—	**301711**	Yellow	
—	**301712**	Green	
—	**301710**	Brown	
950701	—	Gray	Steel

Digimatic type 0 to 300 mm*

Order No.*		Color	Material
Ratchet	Speeder		
04AZB661	**04GAA260**	Gray	Plastic
04GZA241	**04GAA260**	Gray	
—	**301708**	Black	
—	**301709**	Red	
—	**301713**	Blue	
—	**301711**	Yellow	
—	**301712**	Green	
—	**301710**	Brown	
951588	—	Gray	Steel

* Cannot be used for analog types.

Color-coded speeder covers



Mounting example



QuantuMike

SPECIFICATIONS

Order No.	Color
04GAA899	Black
04GAA900	Red
04GAA901	Yellow
04GAA902	Green
04GAA903	Blue
04AAB208	Gray

Mitutoyo reserves the right to change any or all aspects of any product specification, including prices, designs and service content, without notice.

Micrometer Stands SERIES 156

Typical application



156-101-10

- Dedicated stand for micrometers.
- Designed to allow benchtop use of hand micrometers or other gages which have frames suitable for gripping by the clamp. Reduces the influence of temperature changes due to body heat, enabling higher-accuracy measurement.



156-101-10

SPECIFICATIONS

Order No.	Measuring range of standard outside micrometer	Remarks
156-101-10	15 - 100 mm (0.6- 4 in)*	Adjustable angle type

* Items that cannot be mounted on these stands (**Order No. 406-253-30**, **323-253-30**, **331-254-30**, **342-254-30**, **342-264-30**, **369-253-30**, **422-232-30**, **422-233-30**, etc.)

DIMENSIONS

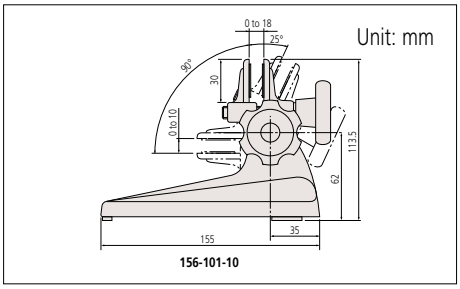

156-101-10

Typical application



156-105-10



156-105-10

SPECIFICATIONS

Order No.	Measuring range of standard outside micrometer	Remarks
156-105-10	25, 50 mm (1, 2 in)	Fixed angle type

DIMENSIONS

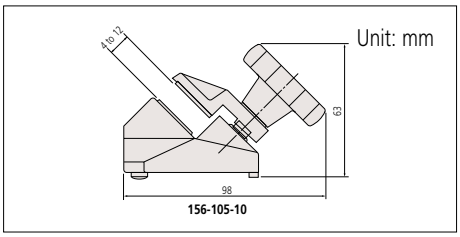

156-105-10



156-102

SPECIFICATIONS

Order No.	Measuring range of standard outside micrometer	Remarks
156-102	100 - 300 mm (4 - 12 in)	Vertical type
156-103	325 - 1000 mm (13 - 40 in)	Vertical type

DIMENSIONS

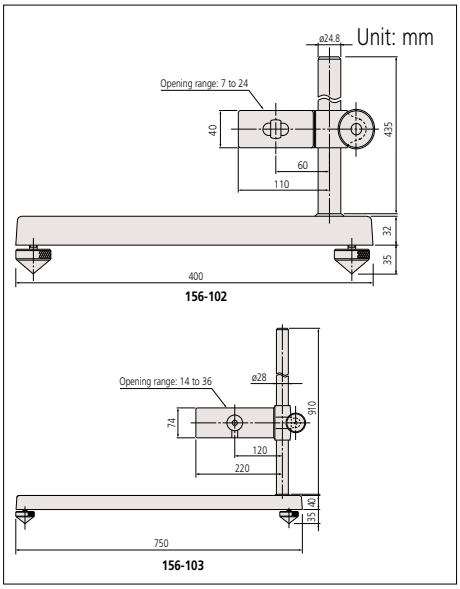

Mitutoyo reserves the right to change any or all aspects of any product specification, including prices, designs and service content, without notice.

Mitutoyo

Quick Guide to Precision Measuring Instruments

Micrometers

Nomenclature

Standard Analog Outside Micrometer

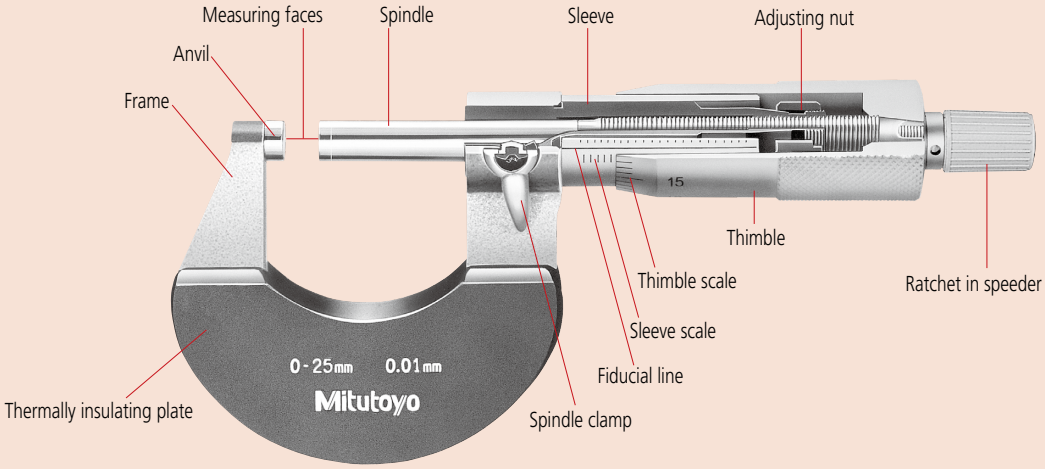

Digimatic Outside Micrometer

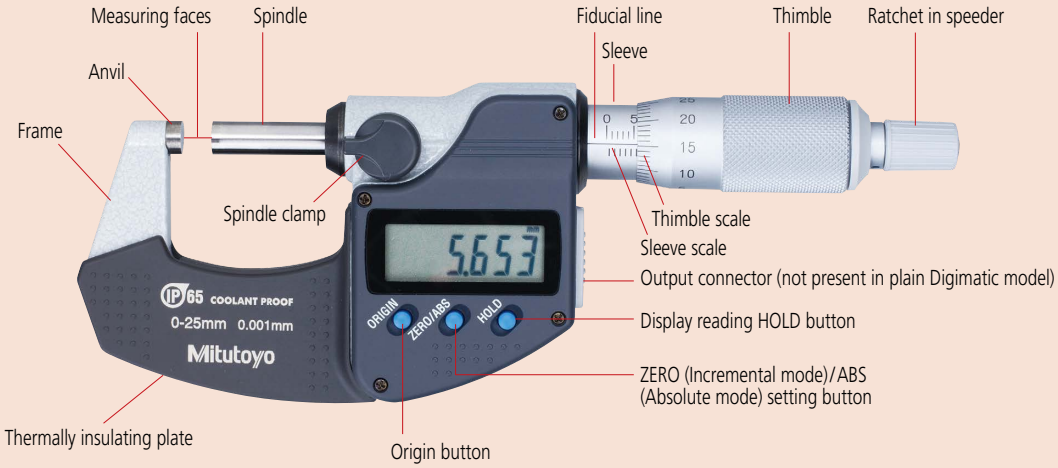

Special Purpose Micrometer Applications

Blade micrometer

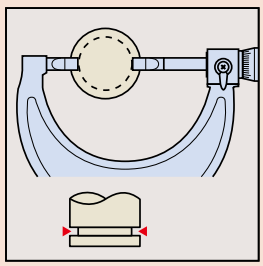

For inside diameter, and narrow groove measurement

Inside micrometer, caliper type

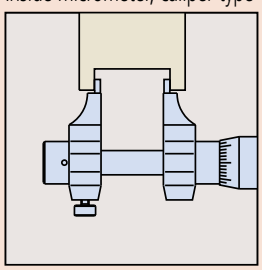

For small internal diameter, and groove width measurement

Spline micrometer

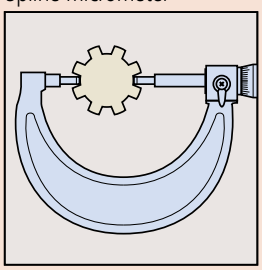

For splined shaft diameter measurement

Tube micrometer

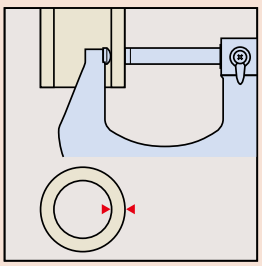

For pipe thickness measurement

Point micrometer

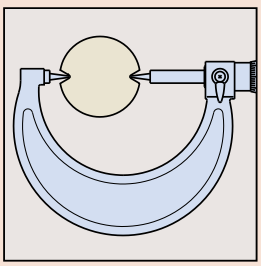

For root diameter measurement

Screw thread micrometer

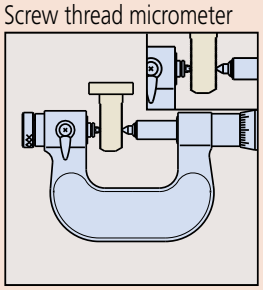

For effective thread diameter measurement

Disc type outside micrometer

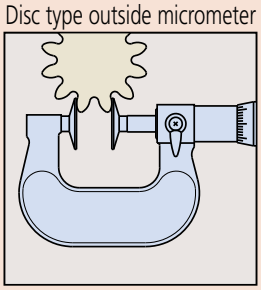

For root tangent measurement on spur gears and helical gears.

Ball tooth thickness micrometer

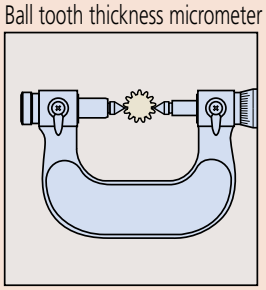

Measurement of gear over-pin diameter

V-anvil micrometer

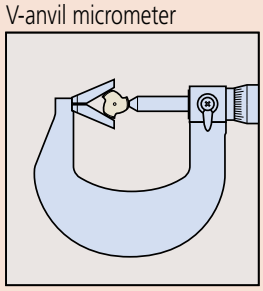

For measurement of 3- or 5-flute cutting tools

How to Read the Scale

Micrometer with standard scale (graduation: 0.01 mm)

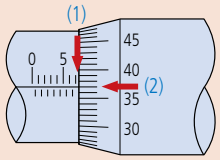

(1) Sleeve scale reading	7. mm
(2) Thimble scale reading	+0.37 mm
Micrometer reading	7.37 mm

Note: 0.37 mm (2) is read at the position where the sleeve fiducial line is aligned to the thimble graduations.

The thimble scale can be read directly to 0.01 mm, as shown above, but may also be estimated to 0.001 mm when the lines are nearly coincident because the line thickness is 1/5 of the spacing between them.

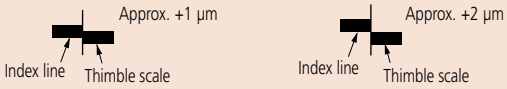

Micrometer with vernier scale (graduation: 0.001 mm)

The vernier scale provided above the sleeve index line enables direct readings to be made to within 0.001 mm.

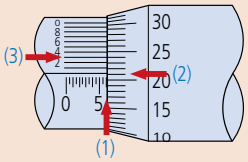

(1) Sleeve scale reading	6. mm
(2) Thimble scale reading	0.21 mm
(3) Reading from the vernier scale marking and thimble graduation line	+0.003 mm
Micrometer reading	6.213 mm

Note: 0.21 mm (2) is read at the position where the index line is between two graduations (21 and 22 in this case). 0.003 mm (3) is read at the position where one of the vernier graduations aligns with one of the thimble graduations.

Micrometer with mechanical-digit display (digital step: 0.001 mm)

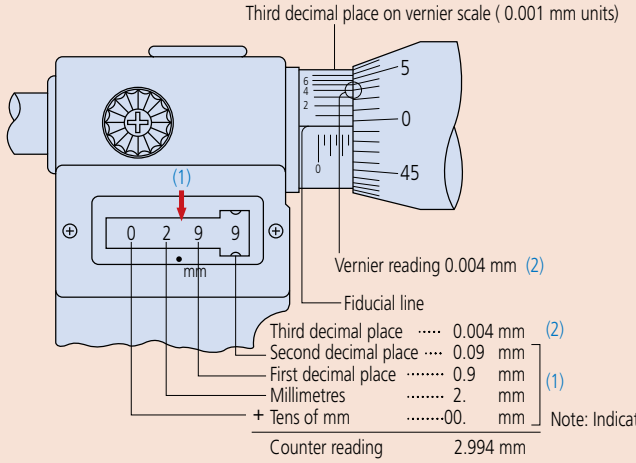

Note: 0.004 mm (2) is read at the position where a vernier graduation line corresponds with one of the thimble graduation lines.

Measuring Force Limiting Device

	Audible in operation	One-handed operation	Remarks
Ratchet stop 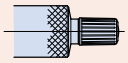	Yes	Unsuitable	Audible clicking operation causes micro-shocks
Friction thimble (F type) 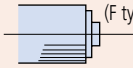	No	Suitable	Smooth operation without shock or sound
Ratchet thimble 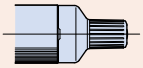	Yes	Suitable	Audible operation provides confirmation of constant measuring force

Measuring Face Detail

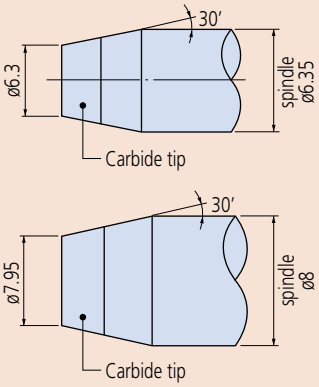

Note: The drawings above are for illustration only and are not to scale

B

Mitutoyo

Micrometer Expansion due to Holding Frame with the Bare Hand

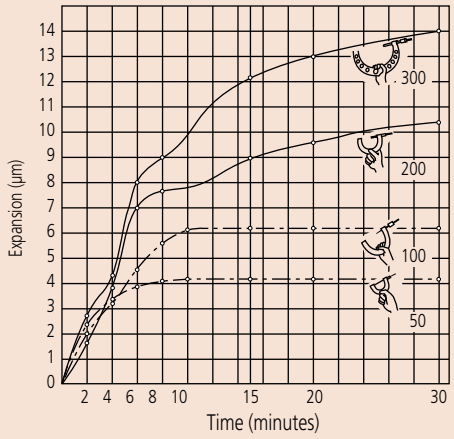

The above graph shows micrometer frame expansion due to heat transfer from hand to frame when the frame is held in the bare hand which, as can be seen, may result in a significant measurement error due to temperature-induced expansion. If the micrometer must be held by hand during measurement then try to minimize contact time. A heat insulator will reduce this effect considerably if fitted, or gloves may be worn. (Note that the above graph shows typical effects and is not guaranteed.)

Length Standard Expansion with Change of Temperature (for 200 mm bar initially at 20 °C)

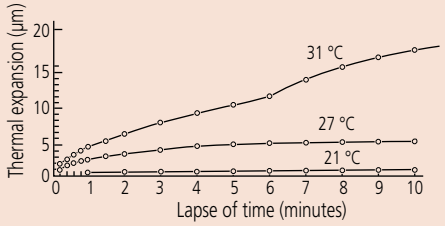

The above experimental graph shows how a particular micrometer standard expanded with time as people whose hand temperatures were different (as shown) held the end of it at a room temperature of 20 °C. This graph shows that it is important not to set a micrometer while directly holding the micrometer standard but to make adjustments only while wearing gloves or lightly supporting the length standard by its heat insulators.
When performing a measurement, note also that it takes time until the expanded micrometer standard returns to the original length.
(Note that the graph values are not guaranteed values but experimental values.)

Difference in Thermal Expansion between Micrometer and Length Standard

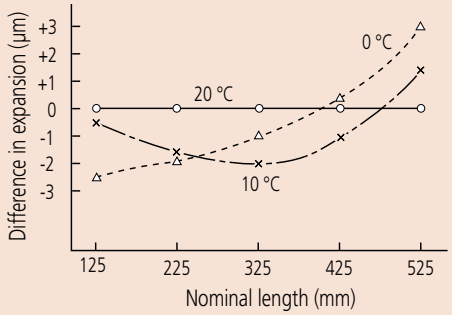

In the above experiment, after the micrometer and its standard were left at a room temperature of 20 °C for about 24 hours for temperature stabilization, the start point was adjusted using the micrometer standard. Then, the micrometer with its standard were left at the temperatures of 0 °C and 10 °C for about the same period of time, and the start point was tested for shift. The above graph shows the results for each of the sizes from 125 through 525 mm at each temperature. This graph shows that both the micrometer and its standard must be left at the same location for at least several hours before adjusting the start point. (Note that the graph values are not guaranteed values but experimental values.)

Effect of Changing Support Method and Orientation (Unit: µm)

Changing the support method and/or orientation of a micrometer after zero setting affects subsequent measuring results. The tables below highlight the measurement errors to be expected in three other cases after micrometers are zero-set in the 'Supported at the bottom and center' case. These actual results show that it is best to set and measure using the same orientation and support method.

Supporting method	Supported at the bottom and center	Supported only at the center
Attitude / Maximum measuring length (mm)	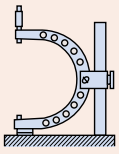	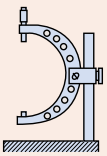
325	0	−5.5
425	0	−2.5
525	0	−5.5
625	0	−11.0
725	0	−9.5
825	0	−18.0
925	0	−22.5
1025	0	−26.0

Supporting method	Supported at the center in a lateral orientation.	Supported by hand downward.
Attitude / Maximum measuring length (mm)	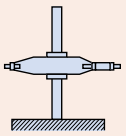	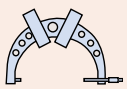
325	+1.5	−4.5
425	+2.0	−10.5
525	−4.5	−10.0
625	0	−5.5
725	−9.5	−19.0
825	−5.0	−35.0
925	−14.0	−27.0
1025	−5.0	−40.0

Abbe's Principle

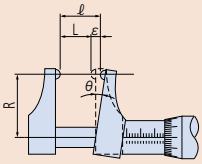

Abbe's principle states that "maximum accuracy is obtained when the scale and the measurement axes are common".
This is because any variation in the relative angle (θ) of the moving measuring jaw on an instrument, such as a caliper jaw micrometer, causes displacement that is not measured on the instrument's scale and this is an Abbe error ($\varepsilon = \ell - L$ in the diagram). Spindle straightness error, play in the spindle guide or variation of measuring force can all cause (θ) to vary, and the error increases with R.

Hooke's Law

Hooke's law states that strain in an elastic material is proportional to the stress causing that strain, providing the strain remains within the elastic limit for that material.

Hertz's Formulae

Hertz's formulae give the apparent reduction in diameter of spheres and cylinders due to elastic compression when measured between plane surfaces. These formulae are useful for determining the deformation of a workpiece caused by the measuring force in point and line contact situations.

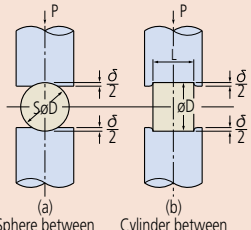

Assuming that the material is steel and units are as follows:
Modulus of elasticity: E =205 GPa
Amount of deformation: δ (µm)
Diameter of sphere or cylinder: D (mm)
Length of cylinder: L (mm)
Measuring force: P (N)

a) Apparent reduction in diameter of sphere
$\delta 2 = 0.82\sqrt[3]{P^2/D}$

b) Apparent reduction in diameter of cylinder
$\delta 1 = 0.094 \cdot P/L\sqrt[3]{1/D}$

Major Measurement Errors of the Screw Micrometer

Error cause	Maximum possible error	Precautions for eliminating errors	Error that might not be eliminated even with precautions
Micrometer feed error	3 µm	1. Correct the micrometer before use.	±1 µm
Anvil angle error	±5 µm assuming the error of a half angle is 15 minutes	1. Measure the angle error and correct the micrometer. 2. Adjust the micrometer using the same thread gage as the workpiece.	±3 µm expected measurement error of half angle
Misaligned contact points	+10 µm		+3 µm
Influence of measuring force	±10 µm	1. Use a micrometer with a low measuring force if possible. 2. Always use the ratchet stop. 3. Adjust the micrometer using a thread gage with the same pitch.	+3 µm
Angle error of thread gage	±10 µm	1. Perform correction calculation (angle). 2. Correct the length error. 3. Adjust the micrometer using the same thread gage as the workpiece.	+3 µm
Length error of thread gage	$\pm\left(3+\frac{L}{25}\right)$ µm	1. Perform correction calculation. 2. Adjust the micrometer using the same thread gage as the workpiece.	±1 µm
Workpiece thread angle error	JIS 2 grade error of half angle ±229 minutes −91 µm +71 µm	1. Minimize the angle error as much as possible. 2. Measure the angle error and perform correction calculation. 3. Use the three-wire method for a large angle error.	±8 µm assuming the error of half angle is ±23 minutes
Cumulative error	(±117+40) µm		+26 µm −12 µm

Screw Pitch Diameter Measurement

• Three-wire method

The screw pitch diameter can be measured with the three-wire method as shown in the figure.
Calculate the pitch diameter (E) with equations (1) and (2).

Metric thread or unified screw (60°)

E=M−3d+0.866025P .....(1)

Whitworth thread (55°)

E=M−3.16568d+0.960491P .....(2)

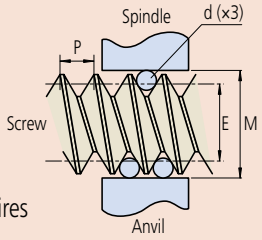

d = Wire diameter
E = Screw pitch diameter
M = Micrometer reading including three wires
P = Screw pitch
(Convert inches to millimeters for unified screws.)

Thread type	Optimal wire size at D
Metric thread or unified screw (60°)	0.577P
Whitworth thread (55°)	0.564P

Major Measurement Errors of the Three-wire Method

Error cause	Precautions for eliminating errors	Possible error	Error that might not be eliminated even with precautions
Pitch error (workpiece)	1. Correct the pitch error ($\delta p = \delta E$) 2. Measure several points and adopt their average. 3. Reduce single pitch errors.	±18 µm assuming that the pitch error is 0.02 mm.	±3 µm
Error of half angle (workpiece)	1. Use the optimal wire diameter. 2. No correction is needed.	±0.3 µm	±0.3 µm
Due to anvil difference	1. Use the optimal wire diameter. 2. Use the wire which has a diameter close to the average at the one wire side.	±8 µm	±1 µm
Wire diameter error	1. Use the predetermined measuring force appropriate for the pitch. 2. Use the predetermined width of measurement edge. 3. Use a stable measuring force.	−3 µm	−1 µm
Cumulative error		In the worst case +20 µm −35 µm	When measured carefully +3 µm −5 µm

• One-wire method

The pitch diameter of odd-fluted tap can be measured using the V-anvil micrometer with the one-wire method. Obtain the measured value (M_1) and calculate M with equation (3) or (4).

M_1 = Micrometer reading during one-wire measurement
D = Odd-fluted tap diameter

Tap with three flutes: $M = 3M_1 - 2D$ .....(3)
Tap with five flutes : $M = 2.2360M_1 - 1.23606D$ .....(4)

Then, assign the calculated M to equation (1) or (2) to calculate the pitch diameter (E).

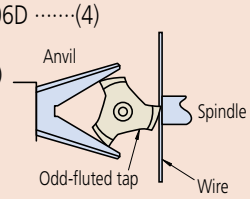

Root Tangent Length

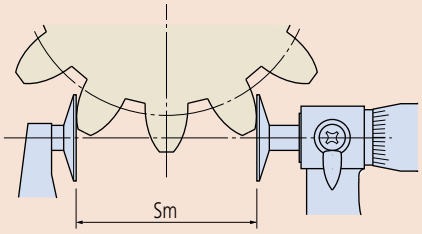

Formula for calculating a root tangent length (Sm):

$Sm = m \cos\alpha_0 \{\pi (Zm - 0.5) + Z \text{ inv}\alpha_0\} + 2Xm \sin\alpha_0$

Formula for calculating the number of teeth within the root tangent length (Zm):

$Zm' = Z \cdot K(f) + 0.5$ (Zm is the integer closest to Zm'.)

where, $K(f) = \frac{1}{\pi}\{\sec\alpha_0 \sqrt{(1+2f)^2 - \cos^2\alpha_0} - \text{inv}\alpha_0 - 2f\tan\alpha_0\}$

and, $f = \frac{X}{Z}$

inv 20° ≒ 0.014904
inv 14.5° ≒ 0.0055448

m: Module
α_0: Pressure angle
Z: Number of teeth
X: Addendum modification coefficient
Sm: Root tangent length
Zm: Number of teeth within the root tangent length

Gear Measurement

Over-pin method

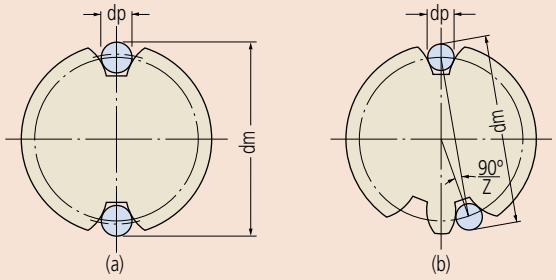

For a gear with an even number of teeth:

$dm = dp + \frac{dg}{\cos\varnothing} = dp + \frac{z \cdot m \cdot \cos\alpha_0}{\cos\varnothing}$

For a gear with an odd number of teeth:

$dm = dp + \frac{dg}{\cos\varnothing} \cdot \cos\left(\frac{90°}{z}\right) = dp + \frac{z \cdot m \cdot \cos\alpha_0}{\cos\varnothing} \cdot \cos\left(\frac{90°}{z}\right)$

however,

$\text{inv}\varnothing = \frac{dp}{dg} - \frac{X}{2} = \frac{dp}{z \cdot m \cdot \cos\alpha_0} - \left(\frac{\pi}{2z} - \text{inv}\alpha_0\right) + \frac{2\tan\alpha_0}{z} \cdot X$

Obtain ø (invø) from the involute function table.

z: Number of teeth
α_0: Pressure angle teeth
m: Module
X: Addendum modification coefficient

Testing Parallelism of Micrometer Measuring Faces

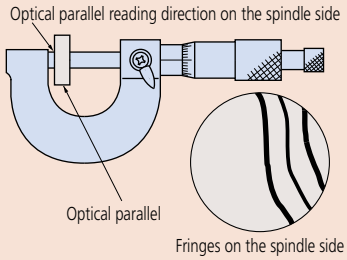



Parallelism can be estimated using an optical parallel held between the faces. First, wring the parallel to the anvil measuring face. Then close the spindle on the parallel using normal measuring force and count the number of red interference fringes seen on the measuring face of the spindle in white light. Each fringe represents a half wavelength difference in height (0.32 µm for red fringes).
In the above figure a parallelism of approximately 1 µm is obtained from 0.32 µm×3=0.96 µm.

Testing Flatness of Micrometer Measuring Faces

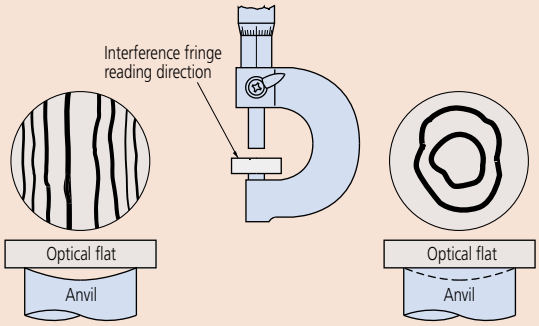

Measuring face is curved by approximately 1.3 µm. (0.32 µm×4 paired red fringes.)

Measuring face is concave (or convex) approximately 0.6 µm deep. (0.32 µm×2 continuous fringes)

General Notes on Using the Micrometer

1. Carefully check the type, measuring range, accuracy, and other specifications to select the appropriate model for your application.
2. Leave the micrometer and workpiece at room temperature long enough for their temperatures to equalize before making a measurement.
3. Look directly at the fiducial line when taking a reading against the thimble graduations. If the graduation lines are viewed from an angle, the correct alignment position of the lines cannot be read due to parallax error.

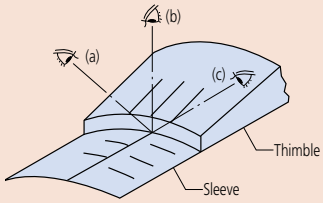



(a) From above the index line



(b) Looking directly at the index line



(c) From below the index line

4. Wipe off the measuring faces of both the anvil and spindle with lint-free paper set the start (zero) point before measuring.

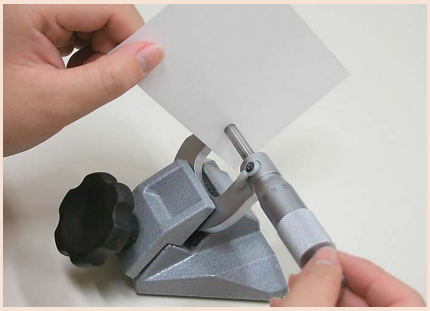

5. Wipe away any dust, chips and other debris from the circumference and measuring face of the spindle as part of daily maintenance. In addition, sufficiently wipe off any stains and fingerprints on each part with dry cloth.
6. Use the constant-force device correctly so that measurements are performed with the correct measuring force.
7. When attaching the micrometer onto a micrometer stand, the stand should clamp the center of the micrometer frame. Do not clamp it too tightly.

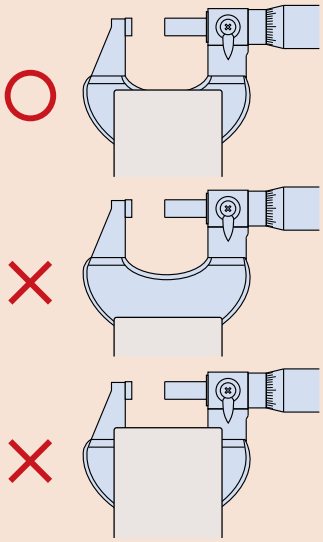

8. Be careful not to drop or bump the micrometer on anything. Do not rotate the micrometer thimble using excessive force. If you believe a micrometer may have been damaged due to accidental mishandling, ensure that it is inspected for accuracy before further use.
9. After a long storage period, or when there is no protective oil film visible, lightly apply anti-corrosion oil to the micrometer by wiping with a cloth soaked in it.
10. Notes on storage:
    - Avoid storing the micrometer in direct sunlight.
    - Store the micrometer in a ventilated place with low humidity.
    - Store the micrometer in a place with little dust.
    - Store the micrometer in a case or other container, which should not be kept on the floor.
    - When storing the micrometer, always leave a gap of 0.1 to 1 mm between the measuring faces.
    - Do not store the micrometer in a clamped state.

Micrometer Performance Evaluation Method

JIS B 7502 was revised and issued in 2016 as the Japanese Industrial Standards of the micrometer, and the "Instrumental error" indicating the indication error of the micrometer has been changed to "Maximum Permissible Error (MPE) of indication".
The "Instrumental error" of the conventional JIS adopts acceptance criteria that the specification range (precision specification) equals acceptance range, and the OK/NG judgment does not include measurement uncertainty (**Fig. 1**).
The "Maximum Permissible Error (MPE) of indication" of the new JIS employs the basic concept of the OK/NG judgment taking into account the uncertainty adopted in the ISO standard (ISO 14253-1).
The verification of conformity and nonconformity to the specifications is clearly stipulated to use the internationally recognized acceptance criteria (simple acceptance) when the specification range equals the acceptance range, and it is accepted that the specification range equals the acceptance range if a given condition considering uncertainty is met.
The above said internationally recognized acceptance criterion is ISO/TR 14253-6: 2012 (**Fig. 2**).
The following describes the standard inspection method including the revised content of JIS 2016.

Fig. 1 **Conventional JIS** Instrumental error
JIS B 7502-1994

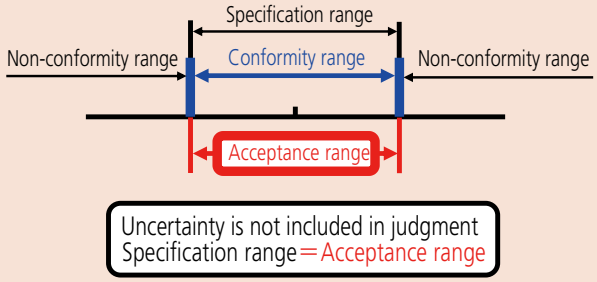

Fig. 2 **New JIS** Maximum Permissible Error (MPE)
JIS B 7502: 2016 (ISO/TR 14253- 6: 2012)

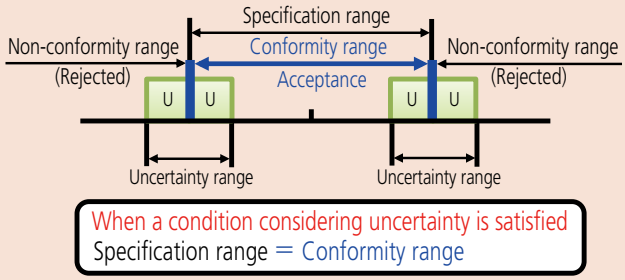

Maximum Permissible Error of Full Surface Contact Error J_{MPE} [JIS B 7502: 2016]

The full surface contact error of the outside micrometer is an indication error measured by contacting the entire measuring surface with the object to be measured at an arbitrary point in the measuring range.
The value can be obtained by adjusting the reference point using a constant pressure device with the minimum measuring length of the micrometer, inserting a grade 0 or 1 gauge block prescribed in JIS B 7506 or an equivalent or higher gage between the measuring surfaces (**Fig. 3**), and then subtracting the dimensions of the gauge block from the indication value of the micrometer using a constant pressure device.

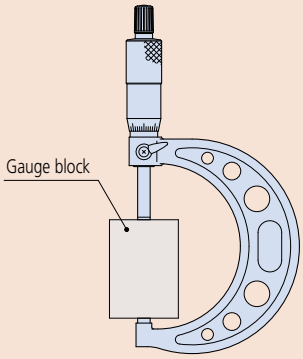

Fig. 3: Measurement of full surface contact error

SELECTION TABLE

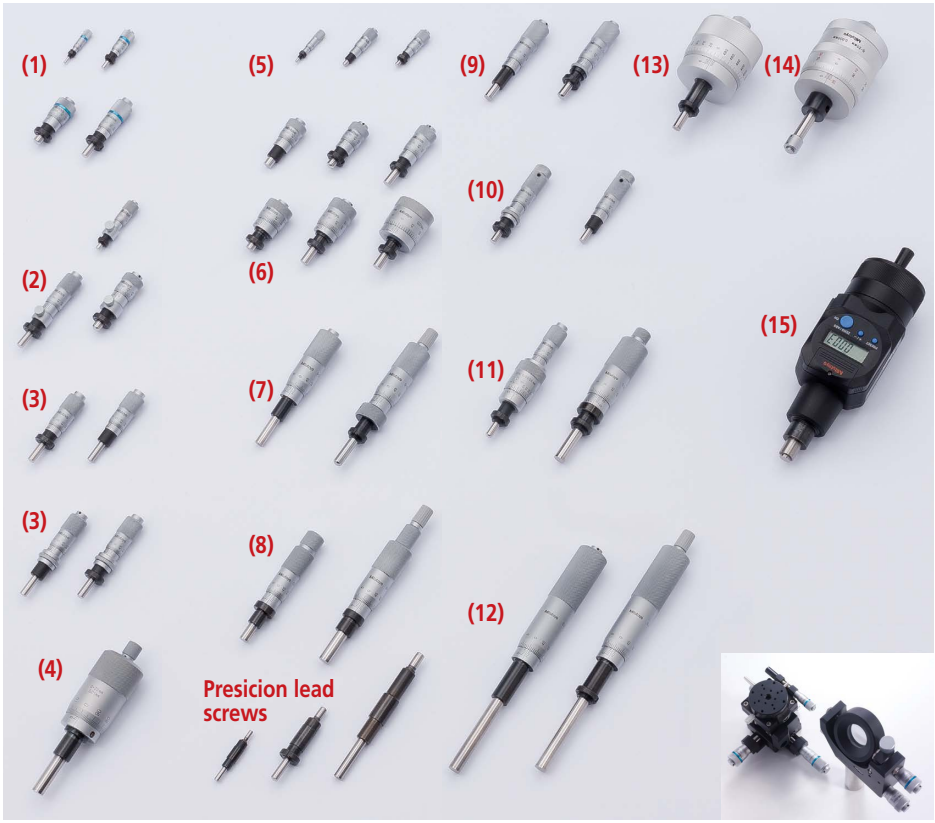

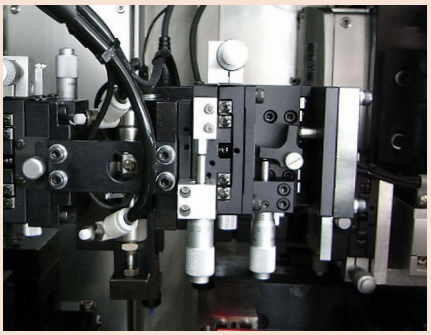

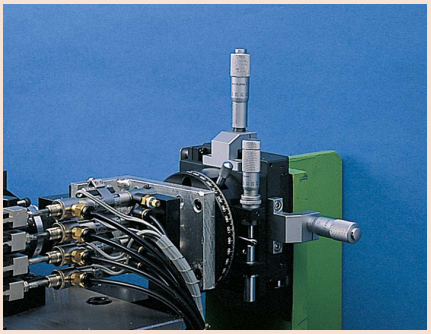

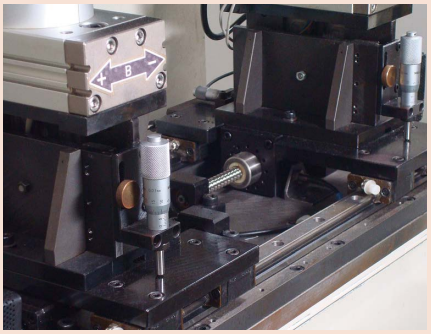

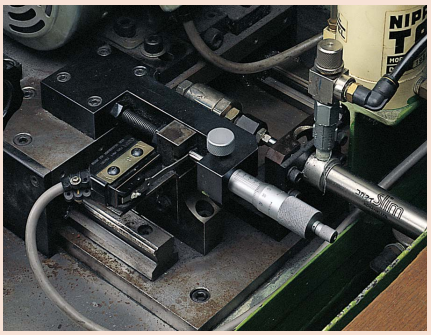

Also refer to "Quick Guide to Precision Measuring Instruments" from page B-127.

Range	Main feature of head			Series	Page
1 mm/0.02 in	High-Function	Differential Screw Translator (Extra-Fine Feed) Type		110	B-117 to B-118
2.5 mm/0.05 in	High-Function	Differential Screw Translator (Extra-Fine Feed) Type	(11)		B-117 to B-118
5 mm/0.2 in	High-Function	Fine Spindle Feed of 0.1 mm/rev	(1)	148	B-114 to B-115
	Standard	Small/Ultra-small Type	(5)		B-87 to B-88
6.5 mm/0.25 in	Standard	Locking-screw Type	(2)		B-108 to B-111
	High-Function	Fine Spindle Feed of 0.1 mm/rev	(1)		B-114 to B-115
	High-Function	Fine Spindle Feed of 0.25 mm/rev			B-116
	Standard	Small/Ultra-small Type	(5)		B-87 to B-88
		Short Thimble with Choice of Diameter	(6)		B-89 to B-91
10 mm	High-Function	Large Thimble Type	(13)	152	B-119 to B-120
13 mm/0.5 in	Standard	Locking-screw Type	(2)	148	B-108 to B-111
	High-Function	Fine Spindle Feed of 0.25 mm/rev			B-116
		Differential Screw Translator (Extra-Fine Feed) Type	(11)	110	B-117 to B-118
		Short Thimble with Choice of Diameter	(6)	148	B-89 to B-91
	Standard	Small Standard Type	(3)		B-92 to B-94
		Small Thimble Diameter Standard Type	(10)		B-95 to B-97
15 mm/0.5 in	High-Function	Non-rotating Spindle Type	(8)	153	B-112
	High-Function	Quick Spindle Feed of 1 mm/rev	(4)	152	B-113
	Standard	Small Standard Type with Carbide-Tipped Spindle	(9)	149	B-98 to B-99
25 mm/1 in	Digimatic			350	B-84 to B-86
	High-Function	Non-rotating Spindle Type	(8)	153	B-112
		Quick Spindle Feed of 1 mm/rev		152	B-113
		Large Thimble Type			B-119 to B-120
		XY-Stage Type	(14)		B-121
		High Accuracy and Resolution		153	B-122
		Digit Counter Type		250	B-123
	Standard	Medium-sized Standard Type	(7)	150	B-100 to B-103
		Medium-sized Standard Type with 8 mm Diameter Spindle		151	B-104 to B-107
50 mm/2 in	Digimatic		(15)	164	B-84
	High-Function	Large Thimble Type		152	B-119 to B-120
		Long Stroke Non-rotating Spindle		197	B-122
	Standard	Medium-sized Standard Type with 8 mm Diameter Spindle	(12)	151	B-104 to B-107
60 - 75 mm	Micro Jack			7	B-123

Mitutoyo reserves the right to change any or all aspects of any product specification, including prices, designs and service content, without notice.

IP65 U-WAVE fit

Dust- and Water-Protected
TÜVRheinland CERTIFIED
www.tuv.com ID 0000040191

Applicable models:
350-28X-30, **350-261-30**, **350-38X-30** and **350-361-30**

Functions (series 164)

Origin point setting (ABS measurement system):
Resets the ABS origin at the current spindle position to the minimum value of the measuring range and switches to ABS mode.
Zero-setting (INC measurement system):
A brief press on the ZERO/ABS button sets display to zero at the current spindle position and switches to the incremental (INC) measuring mode. A longer press resets to the ABS measuring mode.
Data output:
Equipped with output port for transferring measurement data to a Statistical Process Control (SPC) and measurement system.
Auto power ON/OFF:
The reading on the LCD disappears after this instrument is idle for about 20 minutes, but the reading and measurement mode are retained. Turning the spindle causes the reading on the LCD to reappear.
Error alarm:
In case of an overflow on the LCD or a computing error, an error message appears on the LCD and the measuring function stops. This prevents an instrument from giving an erroneous reading. Also, when the battery voltage drops to a certain level, the low-battery indicator appears well before the micrometer becomes unusable.

Optional Accessories

Order No.	Type	Description
959149	C	Connecting cables for **series 164** (1 m)
959150	C	Connecting cables for **series 164** (2 m)
06AFM380C	C	USB Input Tool Direct for **series 164** (2 m)
02AZD790C	C	Connecting cables for **U-WAVE-T** (160 mm): for **series 164**
02AZE140C	C	Connecting cables for **U-WAVE-T** For foot switch: for **series 164**
05CZA662	B	Connecting cables (1 m): for **series 350** (IP65)
05CZA663	B	Connecting cables (2 m): for **series 350** (IP65)
06AFM380B	B	USB Input Tool Direct for **series 350** (IP65) (2 m)
02AZD790B	B	Connecting cables for **U-WAVE-T** (160 mm): for **series 350** (IP65)
02AZE140B	B	Connecting cables for **U-WAVE-T** For foot switch: for **series 350** (IP65)
264-622	IP67	**U-WAVE-TM**
264-623	Buzzer	**U-WAVE-TM**
264-626	IP67	**U-WAVE-TMB**
264-627	Buzzer	**U-WAVE-TMB**
02AZF310	IP67/ buzzer	Connecting unit for **U-WAVE-TM/TMB***

* Cannot be used with **164-163** and **164-164**

Digimatic Micrometer Heads SERIES 164, 350

- Equipped with digital display and output.
- **350-28X-30**, **350-261-30**, **350-38X-30** and **350-361-30** are protection grade IP65, water-proof Digimatic micrometer heads.
- Digimatic models can be easily integrated into statistical process control and measurement systems.



164-163

SPECIFICATIONS

Metric

Order No.	Range (mm)	Resolution (mm)	Graduation (mm)	Stem	Stem dia. (mm)	Spindle end	Graduation features	Maximum permissible error J_{MPE} (µm)
164-163	0 - 50	0.001	—	Plain	18	Flat (carbide tip)	—	±3
350-251-30*1	0 - 25		0.01	Plain	10	Flat (carbide tip)	Standard	±2
350-252-30*1				W/clamp nut				
350-253-30*1				Plain		Spherical (SR4) (carbide tip)		
350-254-30*1				W/clamp nut				
350-281-30*2				Plain	12	Flat (carbide tip)		
350-282-30*2				W/clamp nut				
350-283-30*2				Plain		Spherical (SR4) (carbide tip)		
350-284-30*2				W/clamp nut				
350-261-30*2				Plain		Flat		

Inch/Metric

Order No.	Range (in)	Resolution	Graduation	Stem	Stem dia. (in)	Spindle end	Graduation features	Maximum permissible error J_{MPE} (in)
164-164	0 - 2	0.00005 in/ 0.001 mm	—	Plain	0.709	Flat (carbide tip)	—	±0.00015
350-351-30*1	0 - 1		0.001 in/ 0.01 mm	Plain	0.375	Flat (carbide tip)	Standard	±0.0001
350-352-30*1				W/clamp nut				
350-353-30*1				Plain		Spherical (SR4) (carbide tip)		
350-354-30*1				W/clamp nut				
350-381-30*2				Plain	0.5	Flat (carbide tip)		
350-382-30*2				W/clamp nut				
350-383-30*2				Plain		Spherical (SR4) (carbide tip)		
350-384-30*2				W/clamp nut				
350-361-30*2				Plain		Flat		

- Battery for **series 350**
  SR44 (1 pc.), **938882** for initial operation checks (standard accessory)
  Battery for **series 164**
  SR44 (2 pcs.), **938882** for initial operation checks (standard accessory)
- Battery life: Approx. 2.4 years under normal use (for **350-XXX**)
  Approx. 1.8 years under normal use (for **164-163**, **164**)
- Length standard: Electromagnetic rotary sensor Spanner (**301336**), 1 pc. (for **350-XXX**)
  Screwdriver (**05CAA952**), 1 pc. (for **164-163**, **164**)
- Measuring face: Material/Carbide tip, Hardness/90 HRA or more, Lapped
- Scale finishing: Satin-chrome plated

*1 These models are not water-proof.
*2 IP65 dust / water protection type. Stem diameter of IP65 type is 12 mm.
Note 1: For functional details of **series 350** refer to page B-7. Origin setting is by presetting.
Note 2: Refer to page B-129 for details of the recommended maximum loading limit.

DIMENSIONS

Plain Stem

Plain stem

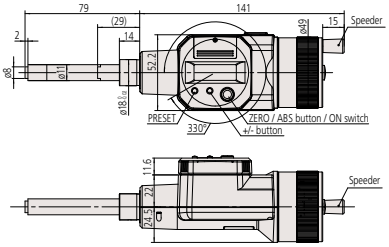

Unit: mm

164-163 Rotatable display Mass: 490 g
( ): with spindle fully retracted.

Mitutoyo reserves the right to change any or all aspects of any product specification, including prices, designs and service content, without notice.

Mitutoyo

Digimatic Micrometer Heads
SERIES 164, 350

DIMENSIONS

Plain Stem

Unit: mm



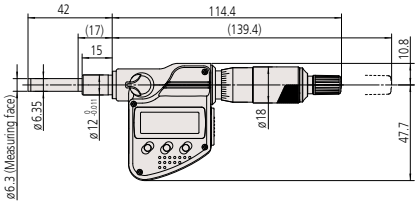

350-281-30
(Stem dia. 12 mm, water-proof type) Mass: 230 g

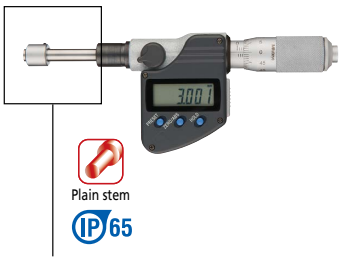

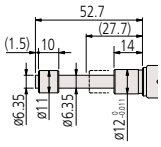

Equipped with a non-rotating device
350-261-30
(Stem dia. 12 mm, water-proof type)
Mass: 235 g

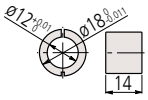

Bush (standard accessory)
350-261-30

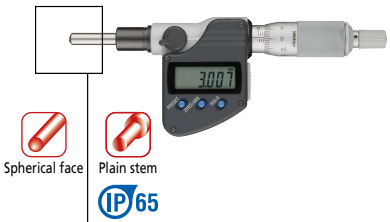

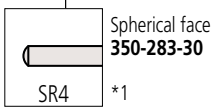

Spherical face
350-283-30
*1

*1 Other dimensions are the same as **350-281-30**.
( ): with spindle fully retracted.

Stem locknut



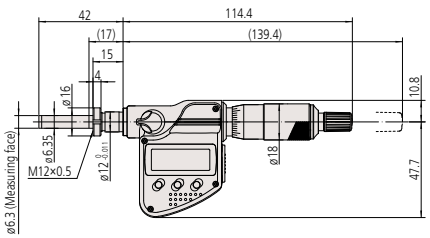



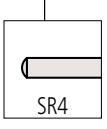

Spherical face
350-284-30
*2

- Fixture thickness: 11.5 mm
  350-282-30 (Stem dia. 12 mm, equipped with locknut, water-proof type) Mass: 230 g

*2 Other dimensions are the same as **350-282-30**.
( ): with spindle fully retracted.

Mitutoyo reserves the right to change any or all aspects of any product specification, including prices, designs and service content, without notice.

DIMENSIONS

Plain Stem

Unit: mm



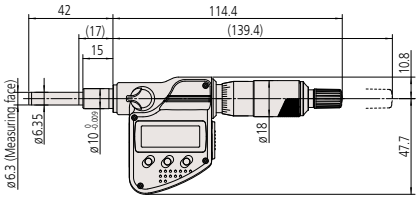

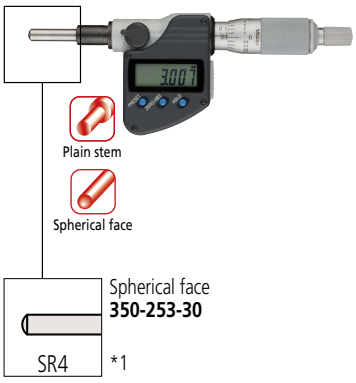

350-251-30
(Stem dia. 10 mm, for general use) Mass: 230 g

*1 Other dimensions are the same as **350-251-30**.
( ): with spindle fully retracted.

Stem Locknut



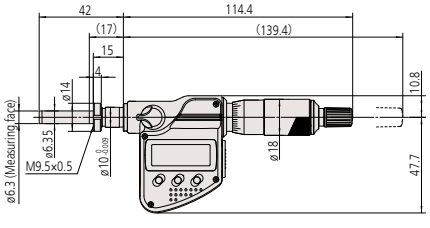

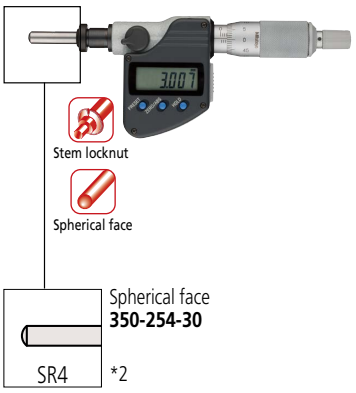

- Fixture thickness: 11.5 mm

350-252-30
(Stem dia. 10 mm, for general use) Mass: 230 g

*2 Other dimensions are the same as **350-252-30**.
( ): with spindle fully retracted.

Mitutoyo reserves the right to change any or all aspects of any product specification, including prices, designs and service content, without notice.

Micrometer Heads
SERIES 148 — Small/Ultra-small Type

• Miniature micrometer heads for ease of incorporating into machines.

SPECIFICATIONS

Metric

Order No.	Range (mm)	Stem dia. (mm)	Stem	Spindle end	Graduation	Maximum permissible error J_{MPE} (µm)
148-215	0 - 5	3.5	Plain	Spherical (SR1.5)	Standard	±5
148-216			W/clamp nut			
148-201-10	0 - 6.5	6	Plain	Flat		
148-203-10			W/clamp nut			
148-205-10			Plain	Spherical (SR3)		
148-207-10			W/clamp nut			
148-209-10			Plain	Flat	Reverse reading	
148-211-10			W/clamp nut			

Inch

Order No.	Range (in)	Stem dia. (in)	Stem	Spindle end	Graduation	Maximum permissible error J_{MPE} (in)
148-217	0 - 0.2	0.156	Plain	Spherical (SR1.5)	Standard	±0.00025
148-218			W/clamp nut			
148-202-10	0 - 0.25	0.25	Plain	Flat		
148-204-10			W/clamp nut			
148-206-10			Plain	Spherical (SR3)		
148-208-10			W/clamp nut			
148-210-10*			Plain	Flat	Reverse reading	
148-212-10*			W/clamp nut			

• Graduation: 0.02 mm (**148-215**, **148-216**), 0.01 mm or 0.001 in
• Measuring face: Material/Alloy tool steel, Hardness/60 HRC or more, Lapped
• Scale finishing: Satin-chrome plated
* Made-to-order models
Note: Refer to page B-129 for details of the recommended maximum loading limit.

DIMENSIONS

Plain Stem

Unit: mm

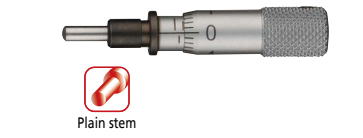

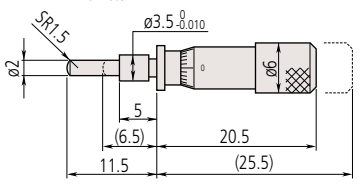

148-215 Mass: 4 g

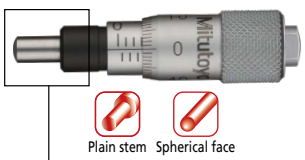

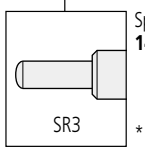



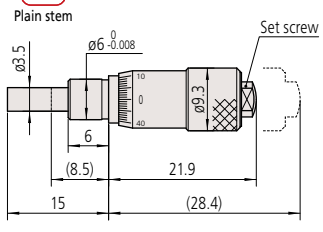

148-201-10 Mass: 10 g



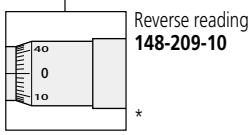

* Other dimensions are the same as **148-201-10**.
( ): with spindle fully retracted.

Mitutoyo reserves the right to change any or all aspects of any product specification, including prices, designs and service content, without notice.

Micrometer Heads
SERIES 148 — Small/Ultra-small Type

DIMENSIONS

Stem Locknut

Unit: mm



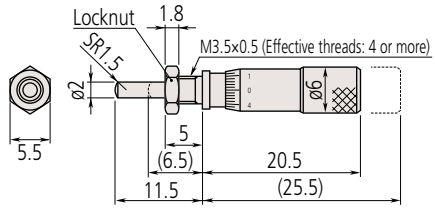

• Fixture thickness: 3 mm
148-216 Mass: 4 g

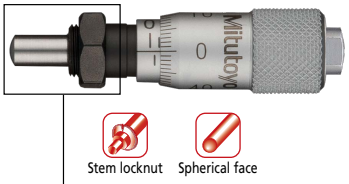

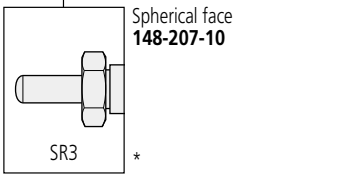



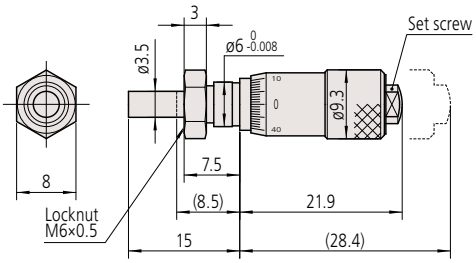

• Fixture thickness: 4 mm
148-203-10 Mass: 10 g

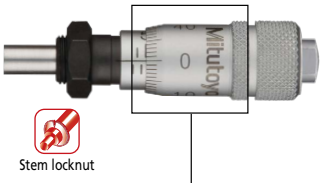

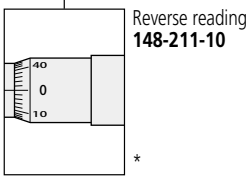

* Other dimensions are the same as **148-203-10**.
( ): with spindle fully retracted.

Mitutoyo reserves the right to change any or all aspects of any product specification, including prices, designs and service content, without notice.

Micrometer Heads
SERIES 148 — Short Thimble with Choice of Diameter

- Short body design maintains measuring range for limited space applications.
- Available in three thimble diameters to provide ease-of-reading options.

SPECIFICATIONS

Metric

Order No.	Range (mm)	Maximum permissible error J_{MPE} (µm)	Stem dia. (mm)	Stem	Spindle end	Special features
148-301-10	0 - 6.5	±2	9.5	Plain	Flat	15 mm thimble dia.
148-302-10				W/clamp nut		
148-303-10				Plain		20 mm thimble dia.
148-304-10				W/clamp nut		
148-313-10				Plain	Spherical (SR4)	15 mm thimble dia.
148-314-10				W/clamp nut		
148-307-10	0 - 13			Plain	Flat	15 mm thimble dia.
148-308-10				W/clamp nut		
148-309-10				Plain		20 mm thimble dia.
148-310-10				W/clamp nut		
148-311-10				Plain		29 mm thimble dia.
148-312-10				W/clamp nut		

- Graduation: 0.01 mm
- Spindle pitch: 0.5 mm
- Measuring face: Material/Alloy tool steel, Hardness/60 HRC or more, Lapped
- Scale finishing: Satin-chrome plated

Note: Refer to page B-129 for details of the recommended maximum loading limit.

Inch

Order No.	Range (in)	Maximum permissible error J_{MPE} (in)	Stem dia. (in)	Stem	Spindle end	Special features
148-351-10	0 - 0.25	±0.0001	0.375	Plain	Flat	0.59 in thimble dia.
148-352-10				W/clamp nut		
148-353-10				Plain		0.79 in thimble dia.
148-354-10				W/clamp nut		
148-357-10	0 - 0.5			Plain		0.59 in thimble dia.
148-358-10				W/clamp nut		
148-359-10				Plain		0.79 in thimble dia.
148-360-10				W/clamp nut		

- Graduation: 0.001 in
- Spindle pitch: 0.025 in
- Measuring face: Material/Alloy tool steel, Hardness/60 HRC or more, Lapped
- Scale finishing: Satin-chrome plated

Note: Refer to page B-129 for details of the recommended maximum loading limit.

Mitutoyo reserves the right to change any or all aspects of any product specification, including prices, designs and service content, without notice.

DIMENSIONS

Plain Stem

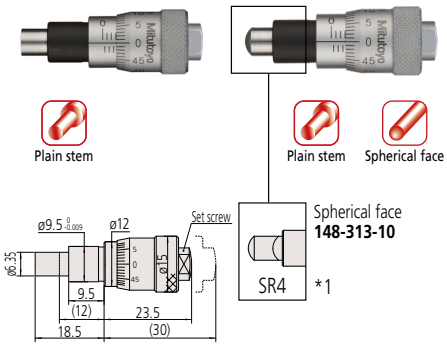

148-301-10
Mass: 26 g
Thimble diameter: 15

*1 Other dimensions are the same as **148-301-10**.

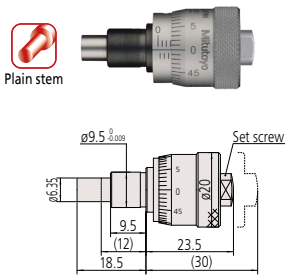

148-303-10
Mass: 39 g
Thimble diameter: 20

Stem Locknut

Unit: mm

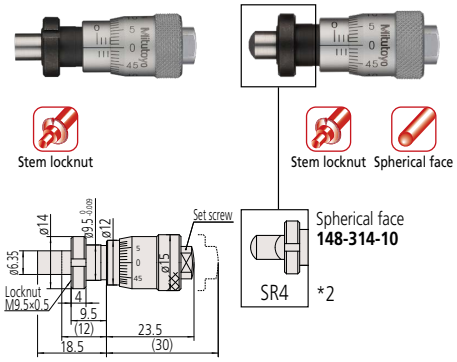

- Fixture thickness: 6 mm

148-302-10
Mass: 26 g
Thimble diameter: 15

*2 Other dimensions are the same as **148-302-10**.

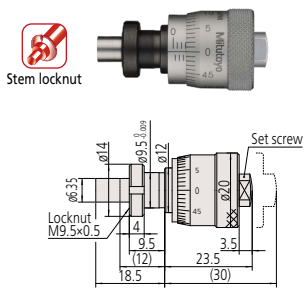

- Fixture thickness: 6 mm

148-304-10
Mass: 39 g
Thimble diameter: 20

( ): with spindle fully retracted.

B

Micrometer Heads
SERIES 148 — Short Thimble with Choice of Diameter

DIMENSIONS

Unit: mm

Plain Stem

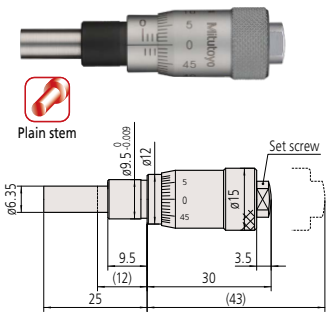

148-307-10
Mass: 35 g Thimble diameter: 15

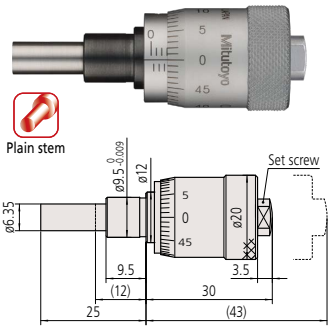

148-309-10
Mass: 55 g Thimble diameter: 20

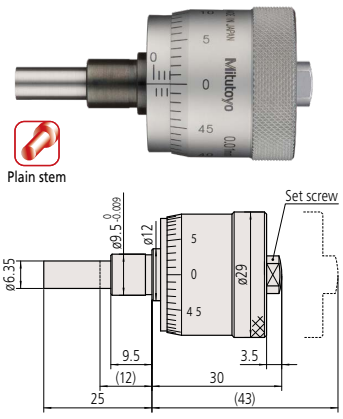

148-311-10
Mass: 103 g Thimble diameter: 29

Stem Locknut

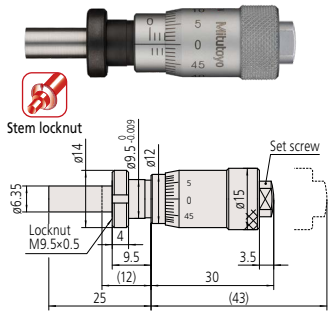

• Fixture thickness: 6 mm
148-308-10
Mass: 35 g Thimble diameter: 15

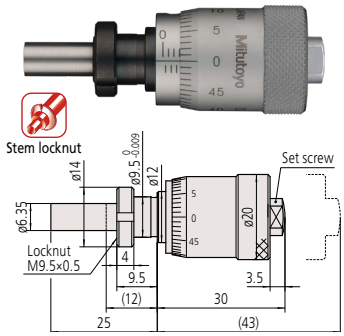

• Fixture thickness: 6 mm
148-310-10
Mass: 55 g Thimble diameter: 20

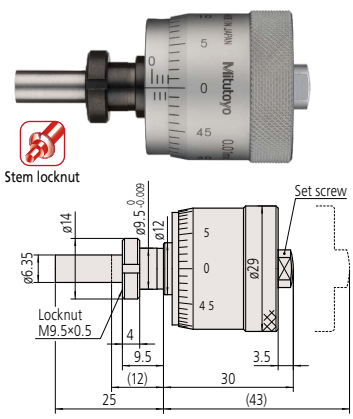

• Fixture thickness: 6 mm
148-312-10
Mass: 103 g Thimble diameter: 29

( ): with spindle fully retracted.

Mitutoyo reserves the right to change any or all aspects of any product specification, including prices, designs and service content, without notice.

Micrometer Heads
SERIES 148 — Small Standard Type

• Measuring range of 13 mm.

SPECIFICATIONS

Metric

Order No.	Range (mm)	Maximum permissible error J_{MPE} (µm)	Stem dia. (mm)	Stem	Spindle end	Graduation features
148-104-10	0 - 13	±2	9.5	Plain	Flat	Standard
148-103-10				W/clamp nut		
148-121-10				Plain*		
148-120-10				W/clamp nut*		
148-801-10				Plain	Spherical (SR4)	
148-802-10				W/clamp nut		
148-803-10				Plain*		
148-804-10				W/clamp nut*		
148-821-10				Plain	Flat	Reverse reading
148-822-10				W/clamp nut		
148-823-10				Plain*		
148-824-10				W/clamp nut*		

• Graduation: 0.01 mm
• Spindle pitch: 0.5 mm
• Measuring face: Material/Alloy tool steel, Hardness/60 HRC or more, Lapped
• Scale finishing: Satin-chrome plated
* With spindle lock
Note: Refer to page B-129 for details of the recommended maximum loading limit.

Inch

Order No.	Range (in)	Maximum permissible error J_{MPE} (in)	Stem dia. (in)	Stem	Spindle end	Graduation features
148-112-10	0 - 0.5	±0.0001	0.375	Plain	Flat	Standard
148-111-10[*2]				W/clamp nut		
148-123-10				Plain[*1]		
148-122-10				W/clamp nut[*1]		
148-811-10				Plain	Spherical (SR4)	
148-812-10				W/clamp nut		
148-813-10				Plain[*1]		
148-814-10				W/clamp nut[*1]		
148-831-10				Plain	Flat	Reverse reading
148-832-10				W/clamp nut		
148-833-10				Plain[*1]		
148-834-10				W/clamp nut[*1]		

• Graduation: 0.001 in
• Spindle pitch: 0.025 in
• Measuring face: Material/Alloy tool steel, Hardness/60 HRC or more, Lapped
• Scale finishing: Satin-chrome plated
*1 With spindle lock
*2 Made-to-order models
Note: Refer to page B-129 for details of the recommended maximum loading limit.

Mitutoyo reserves the right to change any or all aspects of any product specification, including prices, designs and service content, without notice.

Micrometer Heads
SERIES 148 — Small Standard Type

DIMENSIONS

Plain Stem

Mass: 30 g

Unit: mm

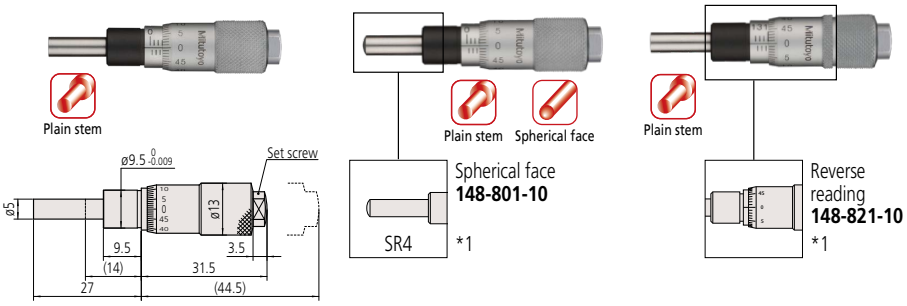

148-104-10

*1 Other dimensions are the same as **148-104-10**.

Plain Stem and Spindle Lock

Mass: 40 g

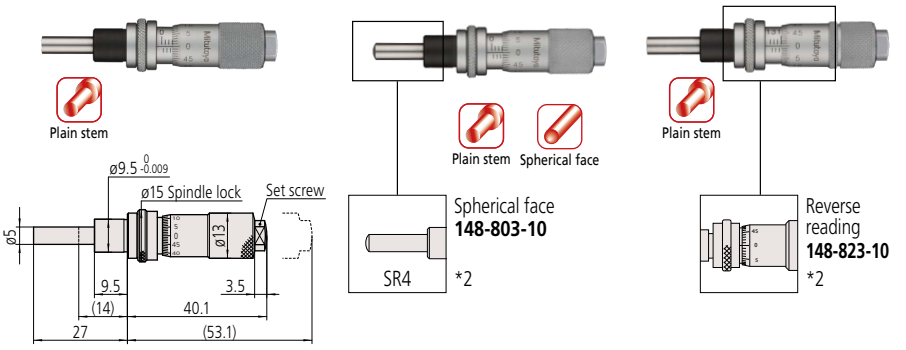

148-121-10

*2 Other dimensions are the same as **148-121-10**.

( ): with spindle fully retracted.

Mitutoyo reserves the right to change any or all aspects of any product specification, including prices, designs and service content, without notice.

DIMENSIONS

Stem Locknut

Mass: 35 g

Unit: mm

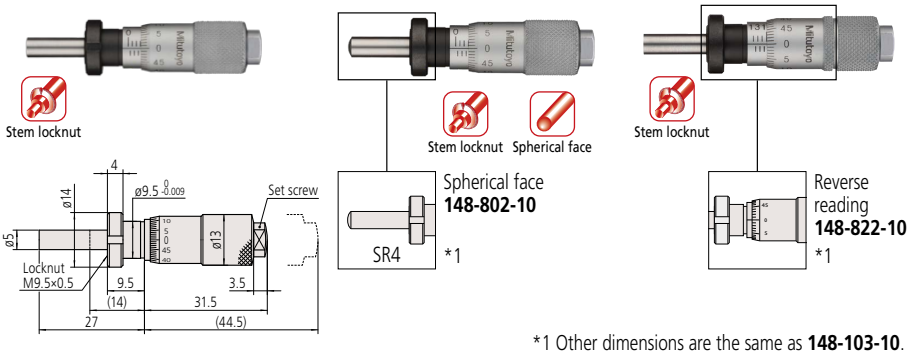

*1 Other dimensions are the same as **148-103-10**.

- Fixture thickness: 6 mm
  148-103-10

Stem Locknut and Spindle Lock

Mass: 45 g

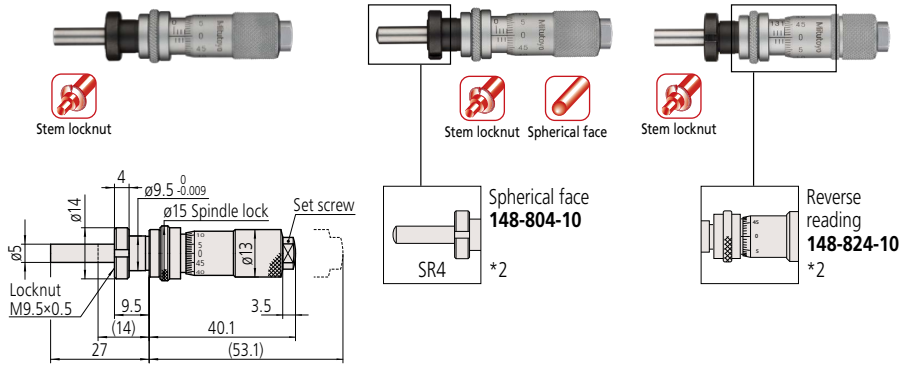

*2 Other dimensions are the same as **148-120-10**.

( ): with spindle fully retracted.

- Fixture thickness: 6 mm
  148-120-10

Mitutoyo reserves the right to change any or all aspects of any product specification, including prices, designs and service content, without notice.

Micrometer Heads
SERIES 148 — Small Thimble Diameter Standard Type

- Measuring range of 13 mm.
- The thimble can be set to zero at any position by loosening the setscrew.

SPECIFICATIONS

Metric

Order No.	Range (mm)	Maximum permissible error J_{MPE} (µm)	Stem dia. (mm)	Stem	Spindle end	Special features
148-503	0 - 13	±2	9.5	Plain	Flat	Standard
148-508				W/clamp nut		
148-506				Plain*1		
148-504				W/clamp nut*1		
148-853				Plain	Spherical (SR4)	
148-854				W/clamp nut*1		
148-863				Plain	Flat	Reverse reading
148-864				W/clamp nut*1		
148-858*2				W/clamp nut	Spherical (SR4)	Standard
148-866*2				Plain*1	Flat	Reverse reading
148-856*2				Plain*1	Spherical (SR4)	Standard
148-868*2				W/clamp nut	Flat	Reverse reading

- Graduation: 0.01 mm
- Spindle pitch: 0.5 mm
- Measuring face: Material/Alloy tool steel, Hardness/60 HRC or more, Lapped
- Scale finishing: Satin-chrome plated

*1 With spindle lock
*2 Made-to-order models
Note: Refer to page B-129 for details of the recommended maximum loading limit.

Inch

Order No.	Range (in)	Maximum permissible error J_{MPE} (in)	Stem dia. (in)	Stem	Spindle end	Special features
148-501	0 - 0.5	±0.0001	0.375	Plain	Flat	Standard
148-507*2				W/clamp nut		
148-505				Plain*1		
148-502				W/clamp nut*1		
148-851				Plain	Spherical (SR4)	
148-852				W/clamp nut*1		
148-861				Plain	Flat	Reverse reading
148-862				W/clamp nut*1		

- Graduation: 0.001 in
- Spindle pitch: 0.025 in
- Measuring face: Material/Alloy tool steel, Hardness/60 HRC or more, Lapped
- Scale finishing: Satin-chrome plated

*1 With spindle lock
*2 Made-to-order models
Note: Refer to page B-129 for details of the recommended maximum loading limit.

Mitutoyo reserves the right to change any or all aspects of any product specification, including prices, designs and service content, without notice.

DIMENSIONS

Plain Stem

Mass: 35 g

Unit: mm

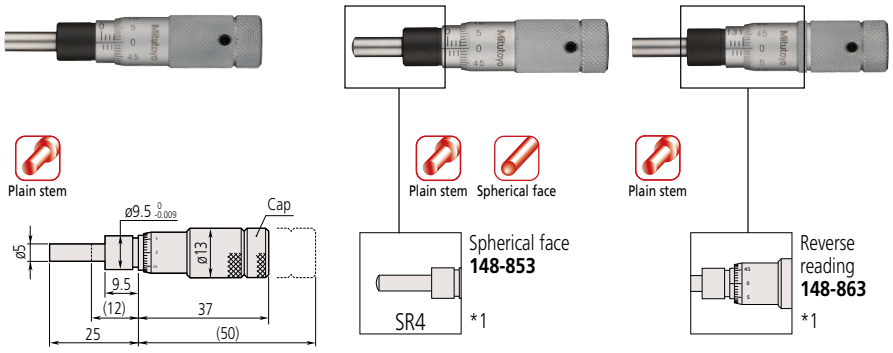

148-503

*1 Other dimensions are the same as **148-503**.

Plain Stem and Spindle Lock

Mass: 35 g

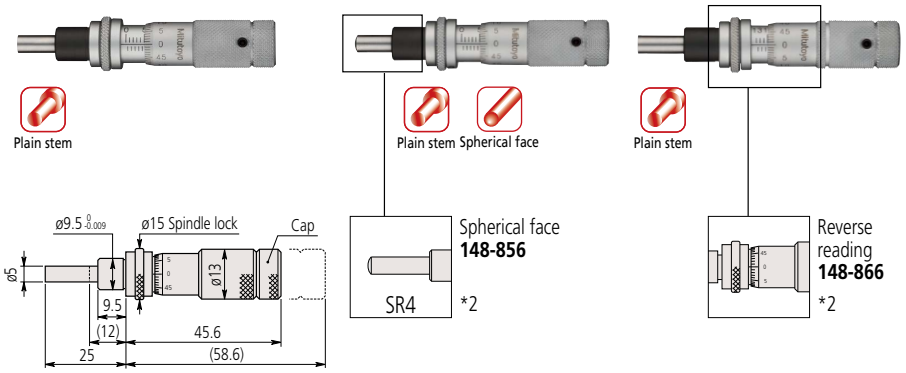

148-506

*2 Other dimensions are the same as **148-506**.

( ): with spindle fully retracted.

Micrometer Heads
SERIES 148 — Small Thimble Diameter Standard Type

DIMENSIONS

Stem Locknut

Mass: 40 g

Unit: mm

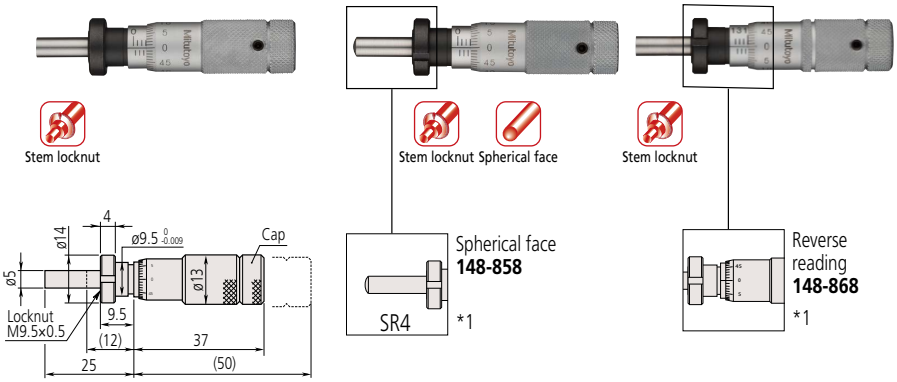

- Fixture thickness: 6 mm
  148-508

*1 Other dimensions are the same as **148-508**.

Stem Locknut and Spindle Lock

Mass: 40 g

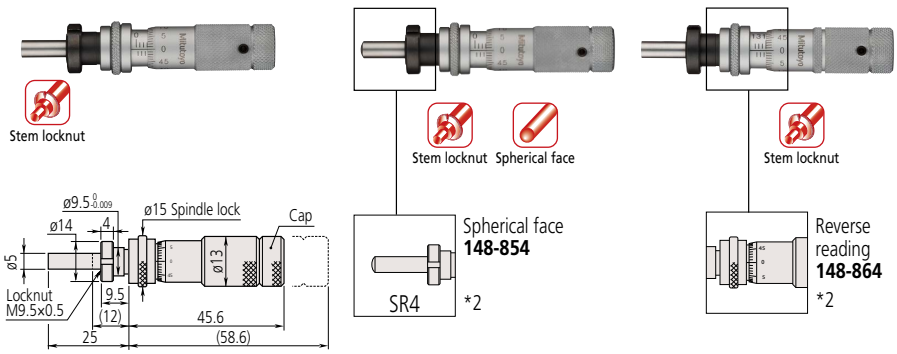

- Fixture thickness: 6 mm
  148-504

*2 Other dimensions are the same as **148-504**.

( ): with spindle fully retracted.

Mitutoyo reserves the right to change any or all aspects of any product specification, including prices, designs and service content, without notice.

Micrometer Heads
SERIES 149 — Small Standard Type with Carbide-Tipped Spindle

• Carbide-tipped spindle provides high abrasion resistance.

SPECIFICATIONS

Metric

Order No.	Range (mm)	Maximum permissible error J_{MPE} (µm)	Stem dia. (mm)	Stem	Spindle end	Graduation features
149-132-10	0 - 15	±2	9.5	Plain	Flat (carbide tip)	Standard
149-131-10				W/clamp nut		
149-183-10				Plain*1		
149-184-10				W/clamp nut*1		
149-801-10				Plain	Spherical (SR4) (carbide tip)	
149-802-10				W/clamp nut		
149-821-10				Plain	Flat (carbide tip)	Reverse reading
149-822-10				W/clamp nut		
149-803-10*2				Plain*1	Spherical (SR4) (carbide tip)	Standard
149-804-10*2				W/clamp nut*1		
149-823-10*2				Plain*1	Flat (carbide tip)	Reverse reading
149-824-10*2				W/clamp nut*1		

Inch

Order No.	Range (in)	Maximum permissible error J_{MPE} (in)	Stem dia. (in)	Stem	Spindle end	Graduation features
149-148-10	0 - 0.5	±0.0001	0.375	Plain	Flat (carbide tip)	Standard
149-147-10				W/clamp nut		
149-185-10*3				Plain*1		
149-182-10				W/clamp nut*1		
149-811-10				Plain	Spherical (SR4) (carbide tip)	
149-812-10				W/clamp nut		
149-831-10*2				Plain	Flat (carbide tip)	Reverse reading
149-832-10*2				W/clamp nut		
149-181*2				Plain*1		Standard

• Graduation: 0.01 mm or 0.001 in
• Spindle pitch: 0.5 mm or 0.025 in
• Measuring face: Material/Carbide tip, Hardness/90 HRA or more, Lapped
• Scale finishing: Satin-chrome plated
*1 With spindle lock *2 Made-to-order models *3 W/rachet (**149-181**) is available
Note: Refer to page B-129 for details of the recommended maximum loading limit.

DIMENSIONS

Plain Stem Mass: 55 g

Unit: mm

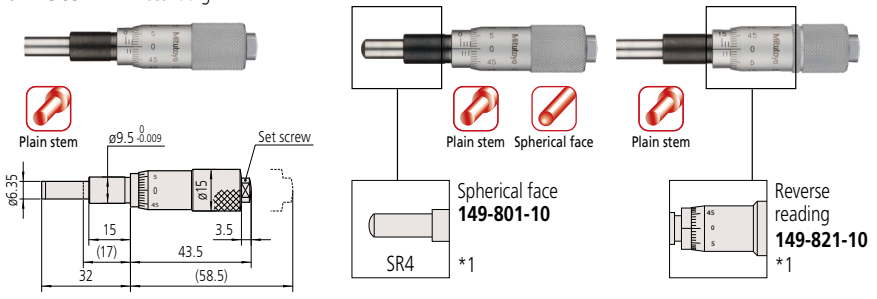

149-132-10

*1 Other dimensions are the same as **149-132-10**.

Plain Stem and Spindle Lock Mass: 55 g

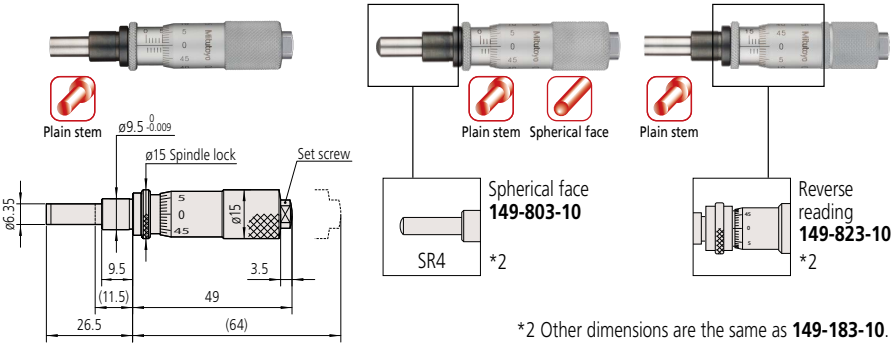

149-183-10

*2 Other dimensions are the same as **149-183-10**.
( ): with spindle fully retracted.

Mitutoyo reserves the right to change any or all aspects of any product specification, including prices, designs and service content, without notice.

Micrometer Heads
SERIES 149 — Small Standard Type with Carbide-Tipped Spindle

DIMENSIONS

Stem Locknut

Mass: 60 g

Unit: mm



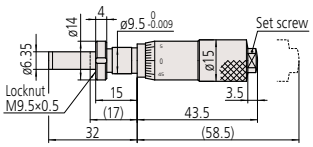

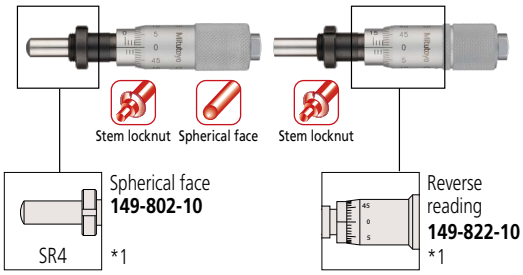

• Fixture thickness: 11.5 mm
149-131-10

*1 Other dimensions are the same as **149-131-10**.

Stem Locknut and Spindle Lock

Mass: 60 g



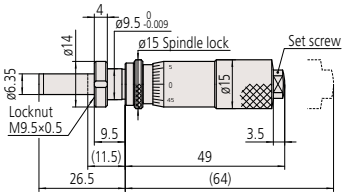

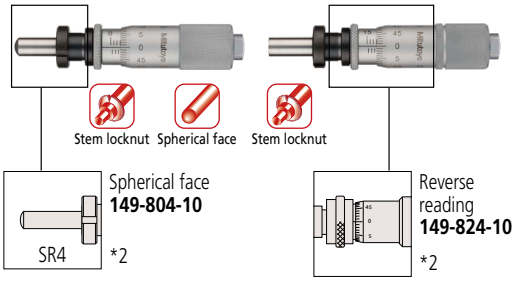

• Fixture thickness: 6 mm
149-184-10

*2 Other dimensions are the same as **149-184-10**.
( ): with spindle fully retracted.

Mitutoyo reserves the right to change any or all aspects of any product specification, including prices, designs and service content, without notice.

Micrometer Heads
SERIES 150 — Medium-sized Standard Type

• Measuring range of 25 mm.

SPECIFICATIONS

Metric

Order No.	Range (mm)	Maximum permissible error J_{MPE} (µm)	Stem dia. (mm)	Stem	Spindle end	Special features
150-192	0 - 25	±2	10	Plain	Flat (carbide tip)	Standard
150-191				W/clamp nut		
150-209				Plain*1		
150-210				W/clamp nut*1		
150-801				Plain	Spherical (SR4) (carbide tip)	
150-802				W/clamp nut		
150-821				Plain	Flat (carbide tip)	Reverse reading
150-822				W/clamp nut		
150-190				Plain		W/vernier (0.001 mm)
150-189				W/clamp nut		
150-183*2				Plain*1		
150-184				W/clamp nut*1		
150-196-10				Plain		W/o ratchet stop
150-195-10				W/clamp nut		
150-211-10				Plain*1		
150-212-10				W/clamp nut*1		
150-803*2				Plain*1	Spherical (SR4) (carbide tip)	Standard
150-804*2				W/clamp nut*1		
150-823*2				Plain*1	Flat (carbide tip)	Reverse reading
150-824*2				W/clamp nut*1		

• Graduation: 0.01 mm, 0.001 mm (w/vernier)
• Spindle pitch: 0.5 mm
• Measuring face: Material/Carbide tip (Only long spindle model is alloy tool steel),
Hardness/90 HRA or more (Only long spindle model is 60 HRC or more), Lapped
• Scale finishing: Satin-chrome plated
*1 With spindle lock
*2 Made-to-order models
Note: Refer to page B-129 for details of the recommended maximum loading limit.

Inch

Order No.	Range (in)	Maximum permissible error J_{MPE} (in)	Stem dia. (in)	Stem	Spindle end	Special features
150-208	0 - 1	±0.0001	0.375	Plain	Flat (carbide tip)	Standard
150-207				W/clamp nut		
150-213*2				Plain*1		
150-214*2				W/clamp nut*1		
150-811				Plain	Spherical (SR4) (carbide tip)	
150-812				W/clamp nut		
150-831				Plain	Flat (carbide tip)	Reverse graduation
150-832				W/clamp nut		
150-206				Plain		W/vernier (0.0001 in)
150-205*2				W/clamp nut		
150-215*2				Plain*1		
150-216*2				W/clamp nut*1		
150-198-10				Plain		W/o ratchet stop
150-197-10				W/clamp nut		
150-217*2				Plain*1		
150-218*2				W/clamp nut*1		

• Graduation: 0.001 in or 0.0001 in (w/vernier)
• Spindle pitch: 0.025 in
• Measuring face: Material/Carbide tip (Only long spindle model is alloy tool steel),
Hardness/90 HRA or more (Only long spindle model is 60 HRC or more), Lapped
• Scale finishing: Satin-chrome plated
*1 With spindle lock
*2 Made-to-order models
Note: Refer to page B-129 for details of the recommended maximum loading limit.

Mitutoyo reserves the right to change any or all aspects of any product specification, including prices, designs and service content, without notice.

Micrometer Heads
SERIES 150 — Medium-sized Standard Type

DIMENSIONS

Plain Stem

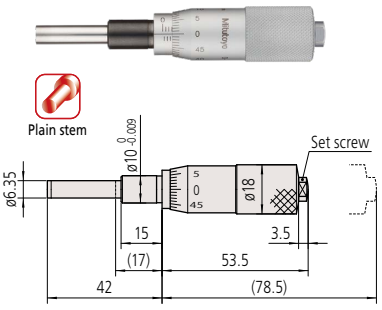

150-196-10 Mass: 95 g

Plain Stem and Spindle Lock

Unit: mm

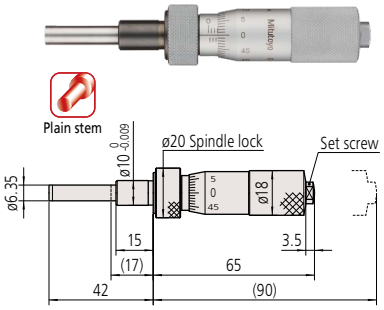

150-211-10 Mass: 115 g

Stem Locknut

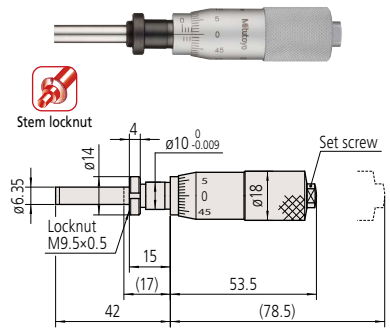

Fixture thickness: 11.5 mm
150-195-10 Mass: 110 g

Stem Locknut and Spindle Lock

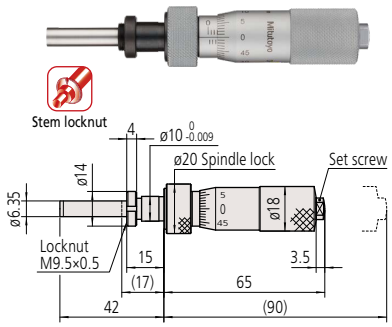

Fixture thickness: 11.5 mm
150-212-10 Mass: 115 g

( ): with spindle fully retracted.

Mitutoyo reserves the right to change any or all aspects of any product specification, including prices, designs and service content, without notice.

DIMENSIONS

( ): with spindle fully retracted. Unit: mm

Plain Stem Mass: 95 g



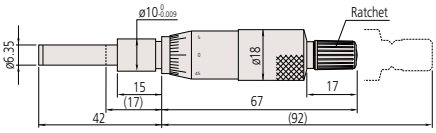

150-192





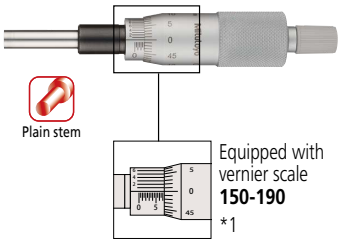

*1 Other dimensions are the same as **150-192**.

Stem Locknut Mass: 100 g



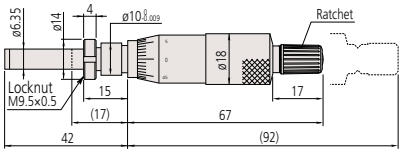

• Fixture thickness: 11.5 mm
150-191





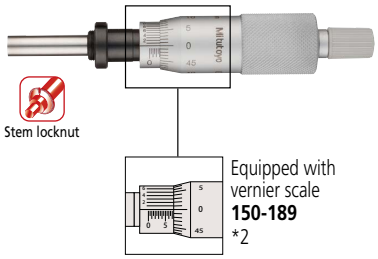

*2 Other dimensions are the same as **150-191**.

Mitutoyo reserves the right to change any or all aspects of any product specification, including prices, designs and service content, without notice.

Micrometer Heads
SERIES 150 — Medium-sized Standard Type

DIMENSIONS

( ): with spindle fully retracted. Unit: mm

Plain Stem and Spindle Lock Mass: 110 g

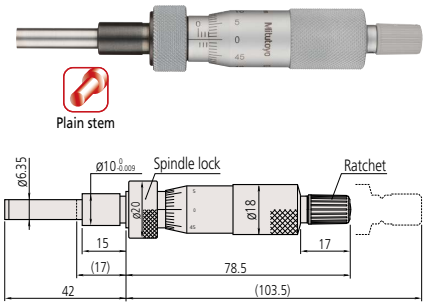

150-209

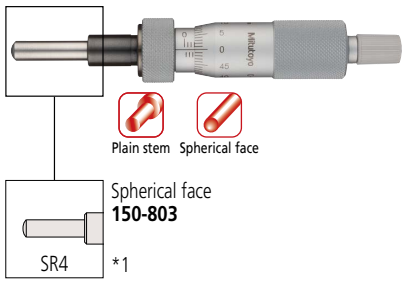

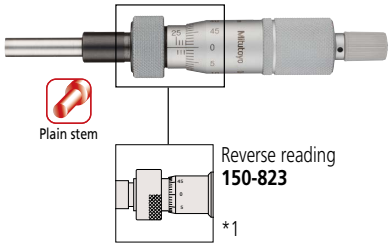

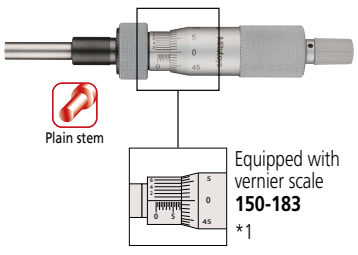

*1 Other dimensions are the same as **150-209**.

Stem Locknut and Spindle Lock Mass: 115 g

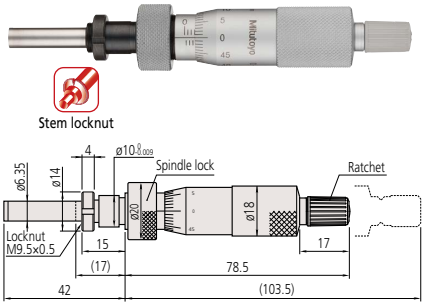

• Fixture thickness: 11.5 mm
150-210

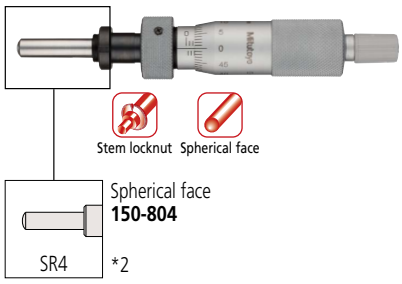

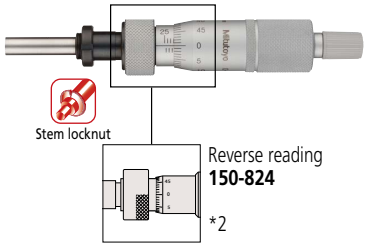

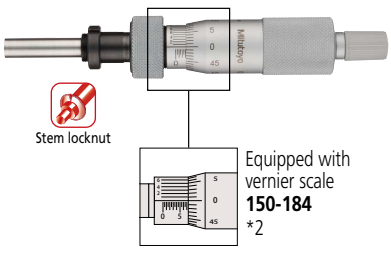

*2 Other dimensions are the same as **150-210**.

Mitutoyo reserves the right to change any or all aspects of any product specification, including prices, designs and service content, without notice.

Micrometer Heads
SERIES 151 — Medium-sized Standard Type with 8 mm Diameter Spindle

- Larger spindle (ø8 mm) for heavy-duty applications (normally ø6.35 mm).

SPECIFICATIONS

Metric

Order No.	Range (mm)	Maximum permissible error J_{MPE} (µm)	Stem dia. (mm)	Stem	Spindle end	Special features
151-224	0 - 25	±2	12	Plain	Flat (carbide tip)	—
151-223				W/clamp nut		
151-214*2				Plain*1		
151-213*2				W/clamp nut*1		
151-222				Plain		W/vernier (0.001 mm)
151-221				W/clamp nut		
151-212*2				Plain*1		
151-211*2				W/clamp nut*1		
151-227-10				Plain		W/o ratchet stop
151-228-10				W/clamp nut		
151-225-10				Plain*1		
151-226-10				W/clamp nut*1		
151-256	0 - 50	±4		Plain		—
151-255				W/clamp nut		
151-260-10				Plain		W/o ratchet stop
151-259-10				W/clamp nut		

- Graduation: 0.01 mm, 0.001 mm (w/vernier)
- Spindle pitch: 0.5 mm
- Measuring face: Material/Carbide tip, Hardness/90 HRA or more, Lapped
- Scale finishing: Satin-chrome plated

*1 With spindle lock
*2 Made-to-order models
Note: Refer to page B-129 for details of the recommended maximum loading limit.

Inch

Order No.	Range (in)	Maximum permissible error J_{MPE} (in)	Stem dia. (in)	Stem	Spindle end	Special features
151-240	0 - 0.1	±0.0001	0.5	Plain	Flat (carbide tip)	—
151-239				W/clamp nut		
151-238				Plain		W/vernier (0.0001 in)
151-237				W/clamp nut		
151-241-10*2				Plain*1		W/o ratchet stop
151-242-10*2				W/clamp nut*1		
151-243-10*2				Plain*1		W/o ratchet stop (0.0001 in)
151-244-10*2				W/clamp nut*1		
151-272	0 - 0.2	±0.0002		Plain		—
151-271				W/clamp nut		

- Graduation: 0.001 in or 0.0001 in (w/vernier)
- Spindle pitch: 0.025 in
- Measuring face: Material/Carbide tip, Hardness/90 HRA or more, Lapped
- Scale finishing: Satin-chrome plated

*1 With spindle lock
*2 Made-to-order models
Note: Refer to page B-129 for details of the recommended maximum loading limit.

Mitutoyo reserves the right to change any or all aspects of any product specification, including prices, designs and service content, without notice.

Micrometer Heads
SERIES 151 — Medium-sized Standard Type with 8 mm Diameter Spindle

DIMENSIONS

Plain Stem

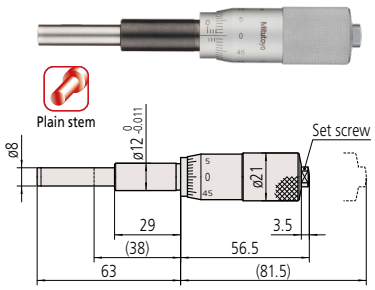

151-227-10 Mass: 150 g

Plain Stem and Spindle Lock

Unit: mm

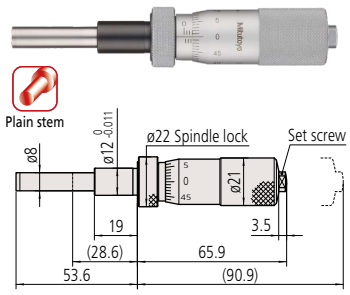

151-225-10 Mass: 165 g

Stem Locknut

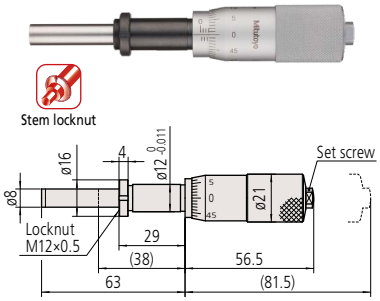

• Fixture thickness: 25.5 mm
151-228-10 Mass: 155 g

Stem Locknut and Spindle Lock

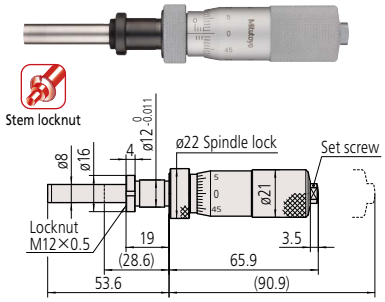

• Fixture thickness: 15.5 mm
151-226-10 Mass: 165 g

( ): with spindle fully retracted.

Mitutoyo reserves the right to change any or all aspects of any product specification, including prices, designs and service content, without notice.

DIMENSIONS

Plain Stem

Unit: mm

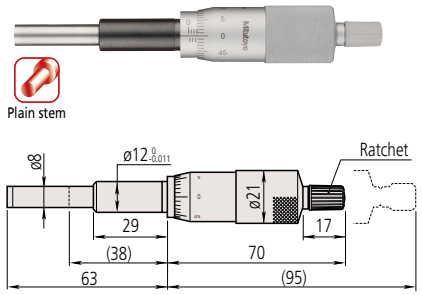

151-224 Mass: 150 g

Equipped with vernier scale
151-222

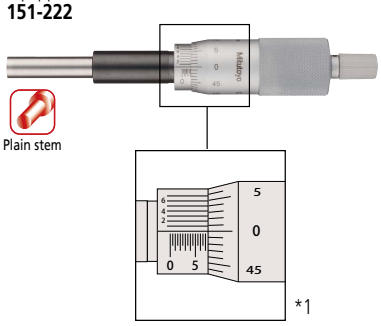

*1 Other dimensions are the same as **151-224**.

Stem Locknut

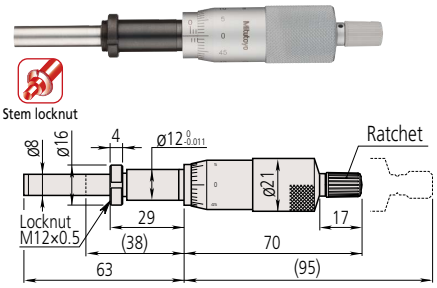

• Fixture thickness: 25.5 mm
151-223 Mass: 155 g

Equipped with vernier scale
151-221

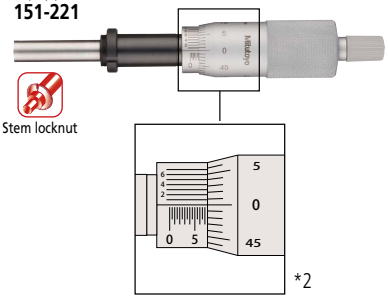

*2 Other dimensions are the same as **151-223**.

Stem Locknut and Spindle Lock

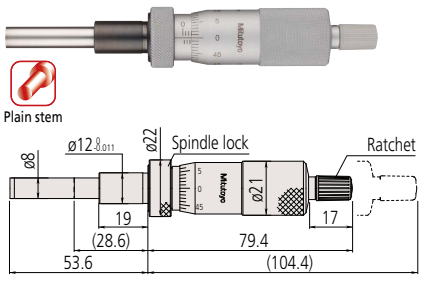

151-214 Mass: 160 g

Equipped with vernier scale
151-212

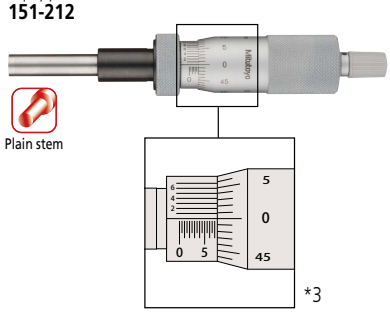

*3 Other dimensions are the same as **151-214**.

Stem Locknut and Spindle Lock

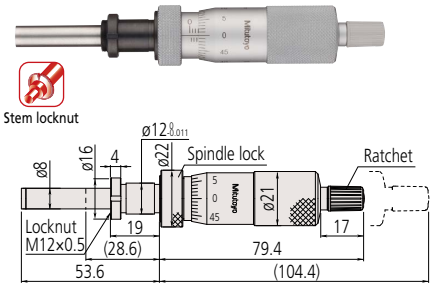

• Fixture thickness: 15.5 mm
151-213 Mass: 165 g

Equipped with vernier scale
151-211

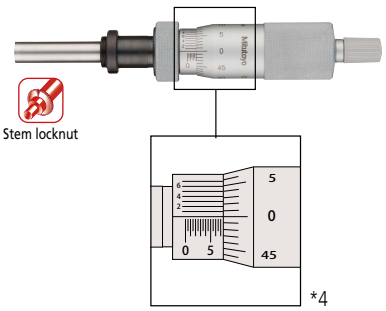

*4 Other dimensions are the same as **151-213**.
( ): with spindle fully retracted.

B

Micrometer Heads
SERIES 151 — Medium-sized Standard Type with 8 mm Diameter Spindle

DIMENSIONS

Plain Stem

Unit: mm

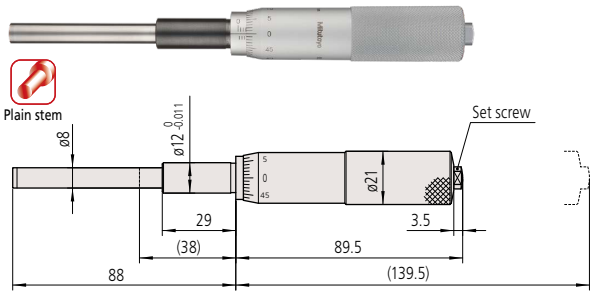

151-260-10 Mass: 240 g

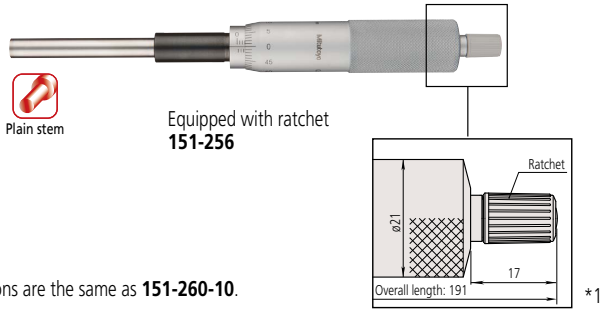

*1

*1 Other dimensions are the same as **151-260-10**.

Stem Locknut

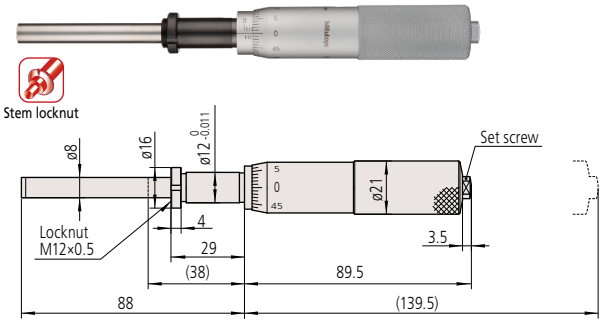

• Fixture thickness: 25.5 mm
151-259-10 Mass: 250 g

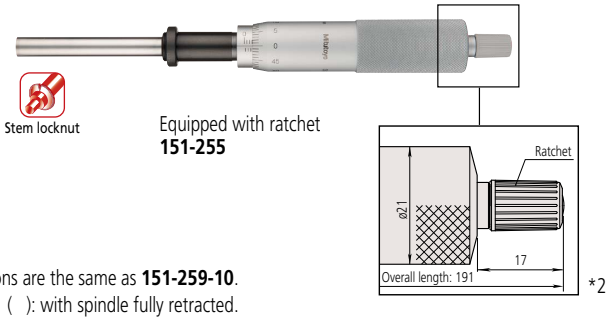

*2

*2 Other dimensions are the same as **151-259-10**.
( ): with spindle fully retracted.

Mitutoyo reserves the right to change any or all aspects of any product specification, including prices, designs and service content, without notice.

Micrometer Heads
SERIES 148 — Locking-screw Type

Secure spindle



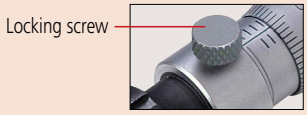

- Locking screw provides secure locking at any position of the spindle.
- Position of the locking screw is the same as the sleeve index line.

SPECIFICATIONS

Metric

Order No.	Range (mm)	Graduation (mm)	Stem dia. (mm)	Stem	Spindle end	Graduation features	Maximum permissible error J_{MPE} (µm)
148-220-10	0 - 6.5	0.01	6	Plain	Flat	Standard	±5
148-221-10				W/clamp nut			
148-222-10				Plain	Spherical (SR3)		
148-223-10				W/clamp nut			
148-150-10	0 - 13		9.5	Plain	Flat		±2
148-151-10				W/clamp nut			
148-152-10				Plain	Spherical (SR4)		
148-153-10				W/clamp nut			
148-316-10	0 - 6.5			Plain	Flat		
148-317-10				W/clamp nut			
148-318-10				Plain	Spherical (SR4)		
148-319-10				W/clamp nut			

- Measuring face: Material/Alloy tool steel, Hardness/60 HRC or more, Lapped
- Scale finishing: Satin-chrome plated

Note: Refer to page B-129 for details of the recommended maximum loading limit.

Inch

Order No.	Range (in)	Graduation (in)	Stem dia. (in)	Stem	Spindle end	Graduation features	Maximum permissible error J_{MPE} (in)
148-230-10	0 - 0.25	0.001	0.25	Plain	Flat	Standard	±0.00025
148-231-10				W/clamp nut			
148-232-10				Plain	Spherical (SR3)		
148-233-10				W/clamp nut			
148-160-10	0 - 0.5		0.375	Plain	Flat		±0.0001
148-161-10				W/clamp nut			
148-162-10				Plain	Spherical (SR4)		
148-163-10				W/clamp nut			
148-326-10	0 - 0.25			Plain	Flat		
148-327-10				W/clamp nut			
148-328-10				Plain	Spherical (SR4)		
148-329-10				W/clamp nut			

- Measuring face: Material/Alloy tool steel, Hardness/60 HRC or more, Lapped
- Scale finishing: Satin-chrome plated

Note: Refer to page B-129 for details of the recommended maximum loading limit.

Mitutoyo reserves the right to change any or all aspects of any product specification, including prices, designs and service content, without notice.

Micrometer Heads
SERIES 148 — Locking-screw Type

DIMENSIONS

Unit: mm

Plain Stem

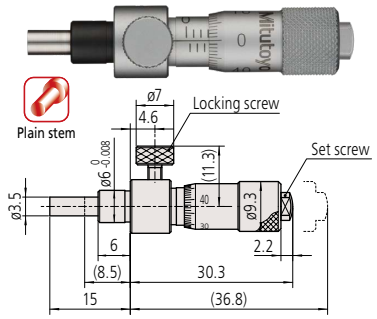

148-220-10 Mass: 16 g

Stem Locknut

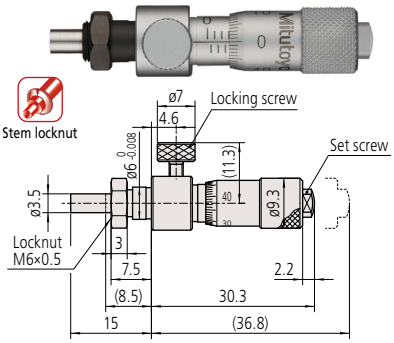

• Fixture thickness: 4 mm
148-221-10 Mass: 17 g

Plain Stem

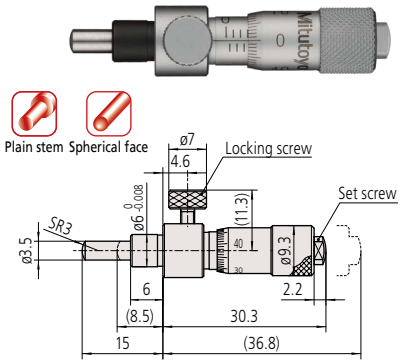

Spherical face (SR3)
148-222-10 Mass: 16 g

Stem Locknut

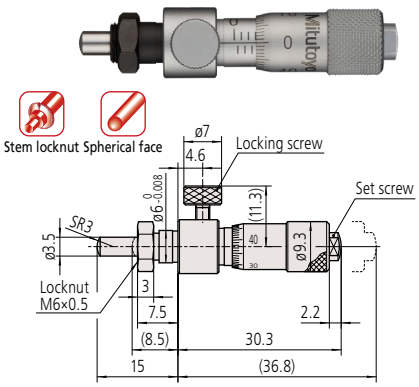

Spherical face (SR3) • Fixture thickness: 4 mm
148-223-10 Mass: 17 g

( ): with spindle fully retracted.

Mitutoyo reserves the right to change any or all aspects of any product specification, including prices, designs and service content, without notice.

DIMENSIONS

Plain Stem



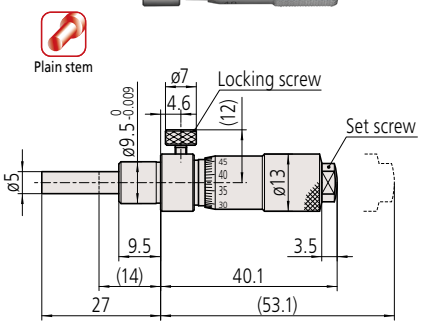

148-150-10 Mass: 40 g

Stem Locknut

Unit: mm



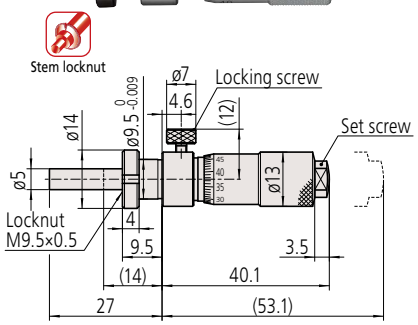

• Fixture thickness: 6 mm
148-151-10 Mass: 43 g

Plain Stem

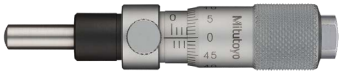

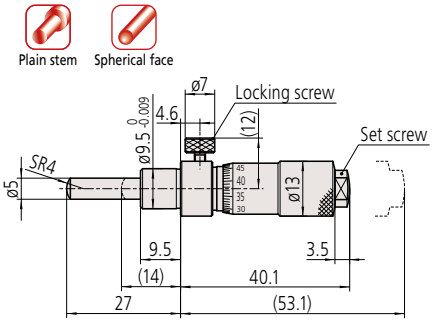

Spherical face (SR4)
148-152-10 Mass: 40 g

Stem Locknut



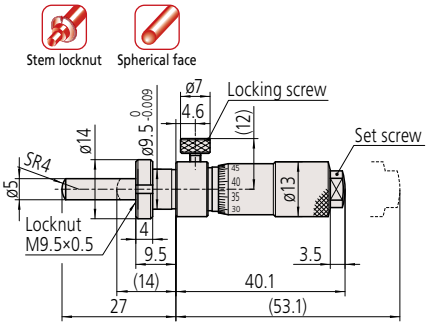

Spherical face (SR4) • Fixture thickness: 6 mm
148-153-10 Mass: 43 g

( ): with spindle fully retracted.

B

Micrometer Heads
SERIES 148 — Locking-screw Type

DIMENSIONS

Plain Stem

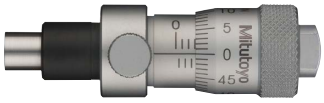

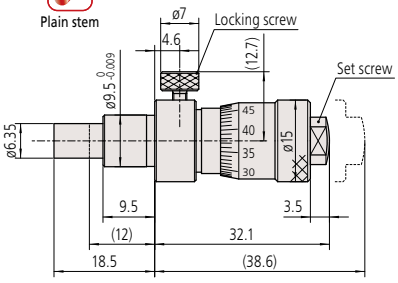

148-316-10 Mass: 40 g

Stem Locknut

Unit: mm

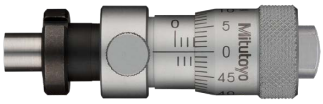

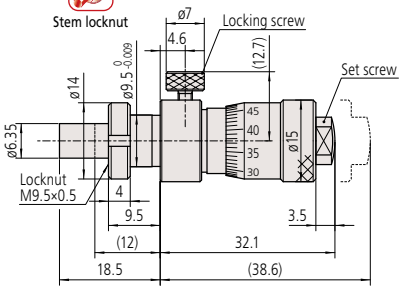

• Fixture thickness: 6 mm
148-317-10 Mass: 43 g

Plain Stem

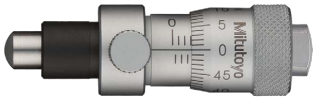

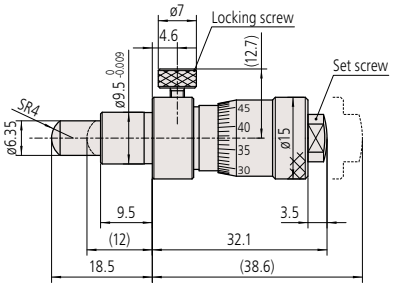

Spherical surface (SR4)
148-318-10 Mass: 40 g

Stem Locknut

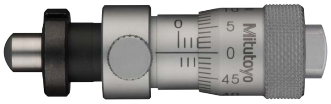

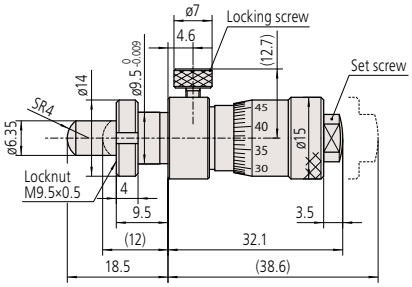

Spherical surface (SR4) • Fixture thickness: 6 mm
148-319-10 Mass: 43 g

( ): with spindle fully retracted.

Mitutoyo reserves the right to change any or all aspects of any product specification, including prices, designs and service content, without notice.

Micrometer Heads
SERIES 153 — Non-rotating Spindle Type

- Micrometer head with non-rotating spindle.
- Torsion-free feed reduces workpiece deformation and wear.

SPECIFICATIONS

Metric

Order No.	Range (mm)	Graduation (mm)	Graduation features	Stem dia. (mm)	Stem	Spindle end	Spindle pitch (mm)	Maximum permissible error J_{MPE} (µm)
153-101	0 - 15	0.01	Standard	9.5	Plain	Flat (carbide tip)	0.5	±3
153-201*1	0 - 25	0.01	Standard	12				
153-202*1		0.001	W/vernier (0.001 mm)					
153-203		0.01	Standard					
153-204		0.001	W/vernier (0.001 mm)					

Inch

Order No.	Range (in)	Graduation (in)	Special features	Stem dia. (in)	Stem	Spindle end	Spindle pitch (in)	Maximum permissible error J_{MPE} (in)
153-108*2	0 - 0.5	0.001	W/vernier (0.0001 in)	0.375	Plain	Flat (carbide tip)	0.025	±0.00015
153-205*1	0 - 1	0.001	Standard	0.5				
153-206*1		0.0001	W/vernier (0.0001 in)					
153-207		0.001	Standard					
153-208		0.0001	W/vernier (0.0001 in)					

- Measuring face: Material/Carbide tip, Hardness/90 HRA or more, Lapped
- Scale finishing: Satin-chrome plated

*1 With ratchet stop *2 Made-to-order model

Note: Refer to page B-129 for details of the recommended maximum loading limit.

DIMENSIONS

Unit: mm

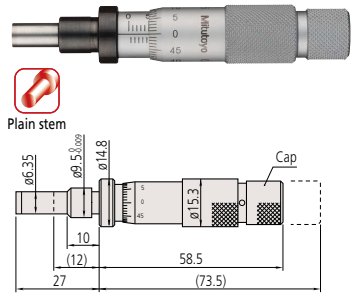

153-101 Mass: 70 g

Equipped with ratchet and vernier scale
153-202

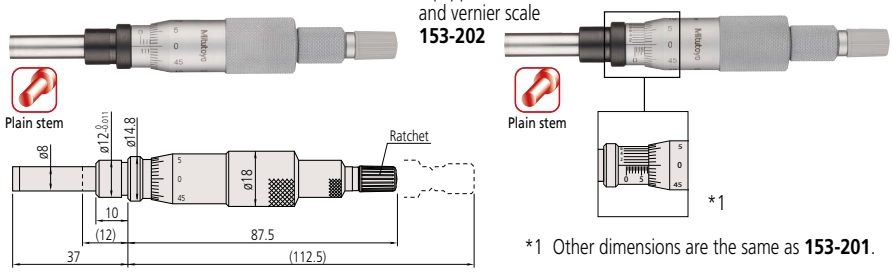

153-201 Mass: 125 g

*1 Other dimensions are the same as **153-201**.

Without ratchet / Equipped with vernier scale
153-204

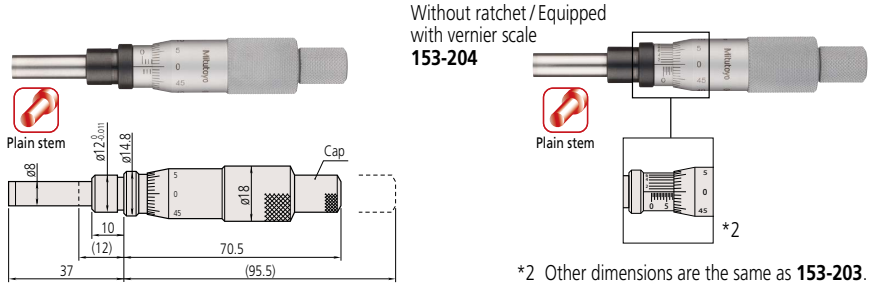

153-203 Mass: 125 g

*2 Other dimensions are the same as **153-203**.

( ): with spindle fully retracted.

Mitutoyo reserves the right to change any or all aspects of any product specification, including prices, designs and service content, without notice.

Micrometer Heads
SERIES 152 — Quick Spindle Feed of 1 mm/rev

- Micrometer head with 1 mm spindle pitch enables quick feeding and positioning.
- The larger screw thread also provides greater load-bearing capacity than a standard head.

SPECIFICATIONS

Metric

Order No.	Range (mm)	Graduation (mm)	Stem dia. (mm)	Stem	Spindle end	Spindle pitch (mm)	Maximum permissible error J_{MPE} (µm)
152-101	0 - 15	0.01	12	Plain	Flat (carbide tip)	1	±2
152-102	0 - 25						

- Measuring face: Material/Carbide tip, Hardness/90 HRA or more, Lapped
- Scale finishing: Satin-chrome plated

Note: Refer to page B-129 for details of the recommended maximum loading limit.

DIMENSIONS

Unit: mm

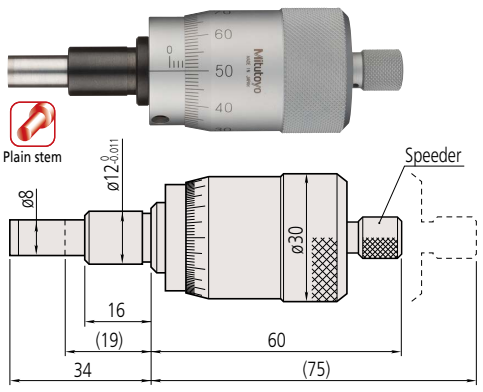

152-101 Mass: 220 g

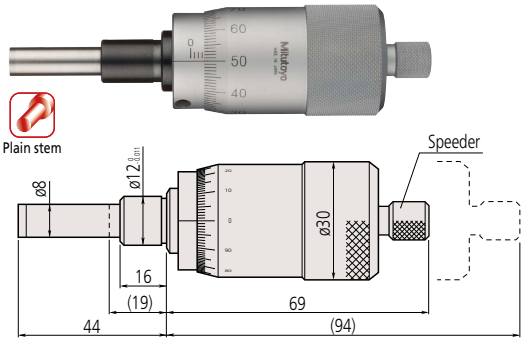

152-102 Mass: 230 g

( ): with spindle fully retracted.

Mitutoyo reserves the right to change any or all aspects of any product specification, including prices, designs and service content, without notice.

Spindle Pitch


Pitch=0.1 mm

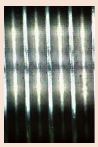
Pitch=0.5 mm

Typical Applications

- Semiconductor-wafer positioning machinery and optical component alignment units, etc.
- Precision X-Y table positioning

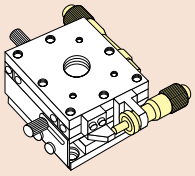

- Precision adjustment of mirror in holder

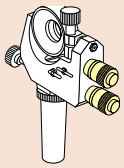

Precision adjustment of mirror in holder



Comparison of Mounting Dimensions Between a Fine-pitch Head and a Standard-pitch Head at the Mid-range Travel Position.

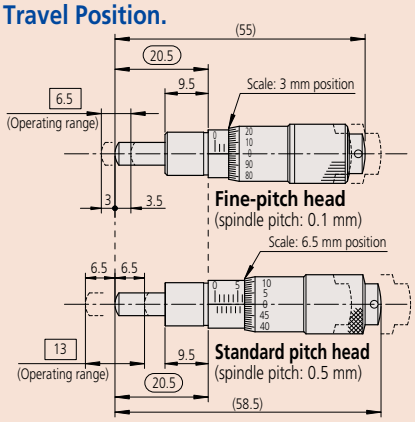

Note: While the fine-pitch micrometer head has a measuring range of 6.5 mm, the standard head has a larger range of 13 mm.
When replacing a standard head, the fine-pitch type can use the common range in the middle of the spindle travel. The standard and compact types of fine-pitch head are otherwise completely interchangeable.

Micrometer Heads
SERIES 148 — Fine Spindle Feed of 0.1 mm/rev

- Highly accurate 0.1 mm pitch thread is only one-fifth of that used for a standard-pitch head (0.5 mm).
- External dimensions are compatible with standard 0.5 mm pitch heads.

SPECIFICATIONS

Metric

Order No.	Range (mm)	Graduation (mm)	Stem dia. (mm)	Stem	Spindle end	Spindle pitch (mm)	Maximum permissible error J_{MPE} (µm)	Special features
148-142-10	0 - 6.5	0.002	9.5	Plain	Spherical (SR4)	0.1	±2	—
148-143-10				W/clamp nut				
148-342-10				Plain				Thicker & shorter thimble
148-343-10				W/clamp nut				
148-242-10			6	Plain	Spherical (SR3)		±5	Small thimble diameter
148-243-10				W/clamp nut				
148-244	0 - 5	0.004	3.5	Plain	Spherical (SR1.5)			
148-245				W/clamp nut				

- Measuring face: Material/Alloy tool steel, Hardness/60 HRC or more, Lapped
- Scale finishing: Satin-chrome plated

Note: Refer to page B-129 for details of the recommended maximum loading limit.

DIMENSIONS

Plain Stem

Unit: mm



Plain stem Spherical face

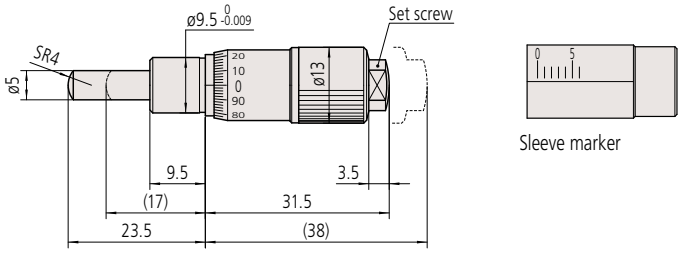

148-142-10 Mass: 31 g

Stem Locknut



Stem locknut Spherical face

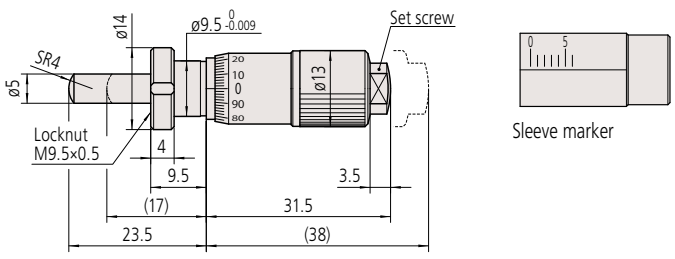

- Fixture thickness: 6 mm

148-143-10 Mass: 34 g

( ): with spindle fully retracted.

Mitutoyo reserves the right to change any or all aspects of any product specification, including prices, designs and service content, without notice.

Micrometer Heads
SERIES 148 — Fine Spindle Feed of 0.1 mm/rev

DIMENSIONS

Unit: mm

Plain Stem



Plain stem Spherical face

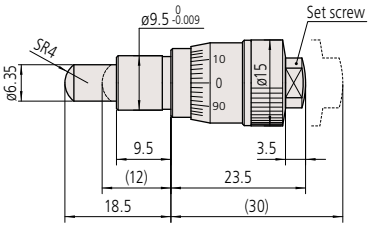

148-342-10 Mass: 29 g

Stem Locknut



Stem locknut Spherical face

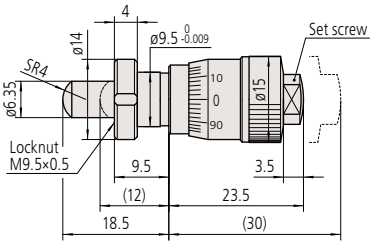

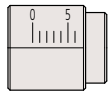

Sleeve marker

• Fixture thickness: 6 mm
148-343-10 Mass: 31 g

Plain Stem



Plain stem Spherical face

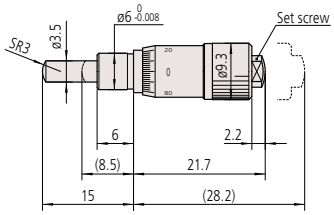

148-242-10 Mass: 10 g

Stem Locknut



Stem locknut Spherical face

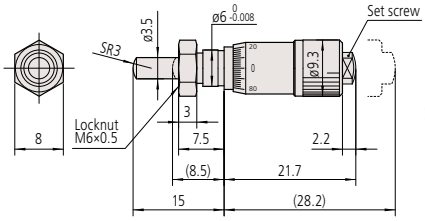

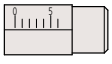

Sleeve marker

• Fixture thickness: 4 mm
148-243-10 Mass: 10 g

Plain Stem



Plain stem Spherical face

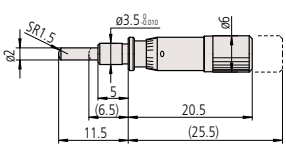

148-244 Mass: 4 g

Stem Locknut



Stem locknut Spherical face

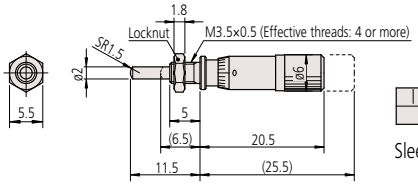



Sleeve marker

• Fixture thickness: 3 mm
148-245 Mass: 5 g

( ): with spindle fully retracted.

Mitutoyo reserves the right to change any or all aspects of any product specification, including prices, designs and service content, without notice.

Micrometer Heads
SERIES 148 — Fine Spindle Feed of 0.25 mm/rev

- Micrometer head with 0.25 mm spindle pitch is convenient for fine-feed and fine-positioning applications.

SPECIFICATIONS

Metric

Order No.	Range (mm)	Graduation (mm)	Stem dia. (mm)	Stem	Spindle end	Spindle pitch (mm)	Maximum permissible error J_{MPE} (µm)
148-132-10	0 - 13	0.01	9.5	Plain	Spherical (SR4)	0.25	±2
148-133-10				W/clamp nut			
148-322-10	0 - 6.5			Plain			
148-323-10				W/clamp nut			

- Measuring face: Material/Alloy tool steel, Hardness/60 HRC or more, Lapped
- Scale finishing: Satin-chrome plated

Note: Refer to page B-129 for details of the recommended maximum loading limit.

DIMENSIONS

Plain Stem

Unit: mm



Plain stem Spherical face

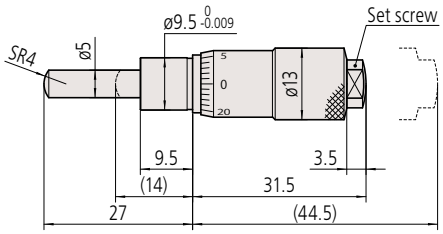

148-132-10 Mass: 30 g



Plain stem Spherical face

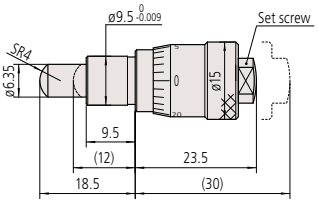

148-322-10 Mass: 30 g

Stem Locknut



Stem locknut Spherical face

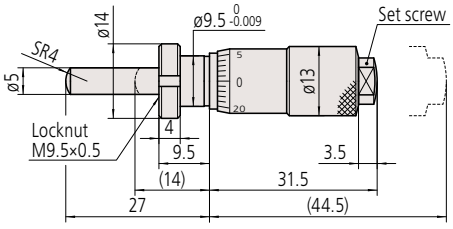

- Fixture thickness: 6 mm

148-133-10 Mass: 35 g



Stem locknut Spherical face

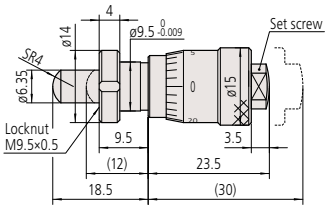

- Fixture thickness: 6 mm

148-323-10 Mass: 35 g

( ): with spindle fully retracted.

Mitutoyo reserves the right to change any or all aspects of any product specification, including prices, designs and service content, without notice.

Micrometer Heads
SERIES 110 — Differential Screw Thread Translator (Extra-Fine Feed) Type

• The differential movement of spindle thread and nut allows ultra-fine feeding.

SPECIFICATIONS

Metric

Order No.	Range (mm)		Graduation (mm)		Graduation features
110-101	0 - 2.5		0.001		Standard
110-102			0.0001		Fine
110-105-10	0 - 1		0.001		Standard
110-106-10			0.0001		Fine
110-107-10			0.001		Standard
110-108-10			0.0001		Fine
110-502-10	Thimble (fine)	0 - 0.2	Thimble (fine)	0.0005	Dual scales; 0.2 mm fine-feed range
	Thimble (coarse)	0 - 13	Thimble (coarse)	0.01	

Order No.	Stem dia. (mm)	Stem	Spindle end	Maximum permissible error J_{MPE}*2 (µm)
110-101	12	W/clamp nut	Flat (carbide tip)	±5/±1.5
110-102				
110-105-10				±3/±1.5
110-106-10				
110-107-10			Spherical (SR10) (carbide tip)	
110-108-10				
110-502-10	9.5		Spherical	±3/±1.5

Inch

Order No.	Range (in)		Graduation (in)		Graduation features
110-111	0 - 0.05		0.00002		Standard
110-112			0.000005		Fine
110-115-10*1	0 - 0.02		0.00002		Standard
110-116-10*1			0.000005		Fine
110-117-10*1			0.00002		Standard
110-118-10*1			0.000005		Fine
110-504-10	Thimble (fine)	0 - 0.006	Thimble (fine)	0.00002	Dual scales; 0.2 mm/0.006 in fine-feed range
	Thimble (coarse)	0 - 0.5	Thimble (coarse)	0.001	

Order No.	Stem dia. (in)	Stem	Spindle end	Maximum permissible error J_{MPE}*2 (in)
110-111	0.5	W/clamp nut	Flat (carbide tip)	±0.00025/±0.00006
110-112				
110-115-10*1				±0.00015/±0.00006
110-116-10*1				
110-117-10*1			Spherical (SR10) (carbide tip)	
110-118-10*1				
110-504-10	0.375		Spherical	±0.00015/±0.00006

• Measuring face: Material/Carbide tip (**110-502-10**/**504-10** are alloy tool steel), Hardness/90 HRA or more (Only **110-502-10**/**504-10** are 60 HRC or more), Lapped
• Scale finishing: Satin-chrome plated
*1 Made-to-order models
*2 Wide range/narrow range
Note: Refer to page B-129 for details of the recommended maximum loading limit.

Mitutoyo reserves the right to change any or all aspects of any product specification, including prices, designs and service content, without notice.

DIMENSIONS

Unit: mm

- Differential movement mechanism with double spindle.
- Non-rotating spindle.
- Fixture thickness: 9.5 mm



Equipped with vernier scale

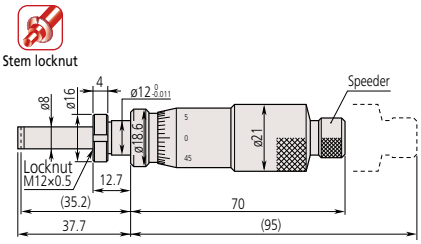

110-101
110-102 Equipped with vernier scale

- Dual thimble
- Fixture thickness: 11.5 mm



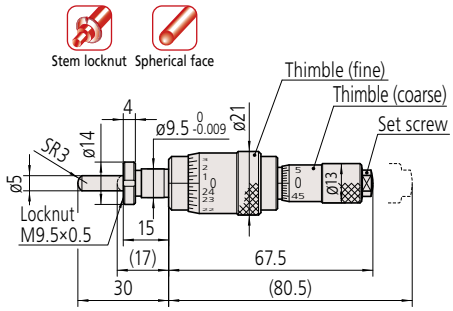

110-502-10 Mass: 95 g

- Differential movement mechanism with double spindle.
- Non-rotating spindle.
- Fixture thickness: 9.5 mm



Equipped with vernier scale

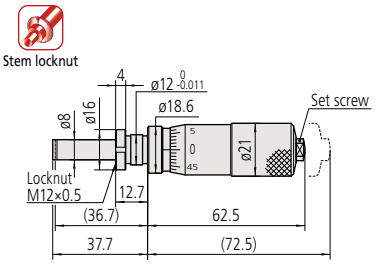

110-105-10
110-106-10 Equipped with vernier scale Mass: 150 g

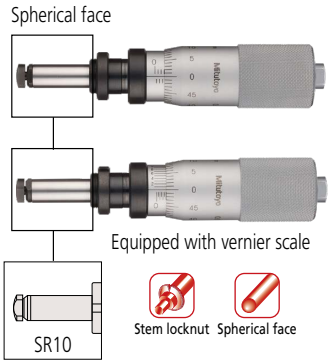

110-107-10
110-108-10 Equipped with vernier scale

( ): with spindle fully retracted.

Mitutoyo reserves the right to change any or all aspects of any product specification, including prices, designs and service content, without notice.

Micrometer Heads
SERIES 152 — Large Thimble Type

• Large-diameter thimble for fine adjustment and positioning.

SPECIFICATIONS

Metric

Order No.	Range (mm)	Graduation (mm)	Graduation features	Stem dia. (mm)	Stem	Spindle end	Spindle pitch (mm)	Maximum permissible error J_{MPE} (µm)
152-283	0 - 10	0.002	Standard	12	W/clamp nut	Flat (carbide tip)	0.5	±2
152-332	0 - 25				Plain			
152-380	0 - 50		Bidirectional					±4

• Measuring face: Material/Carbide tip, Hardness/90 HRA or more, Lapped
• Scale finishing: White anodized aluminum
Note: Refer to page B-129 for details of the recommended maximum loading limit.

DIMENSIONS

Unit: mm



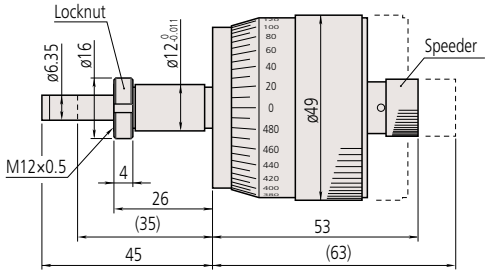

• Fixture thickness: 22.5 mm
152-283 Mass: 190 g

( ): with spindle fully retracted.

Mitutoyo reserves the right to change any or all aspects of any product specification, including prices, designs and service content, without notice.

DIMENSIONS

Unit: mm



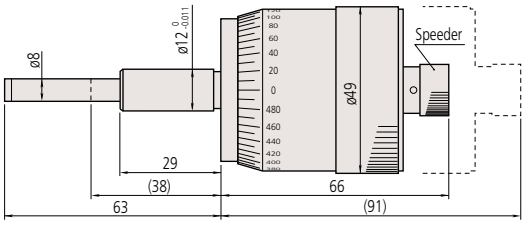

152-332 Mass: 310 g



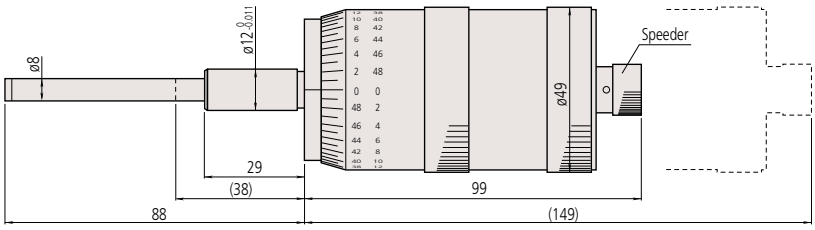

152-380 Mass: 460 g

( ): with spindle fully retracted.

Mitutoyo reserves the right to change any or all aspects of any product specification, including prices, designs and service content, without notice.

Micrometer Heads
SERIES 152 — XY-Stage Type

- Micrometer heads especially designed for accurate cross-travel stage control in X and Y axes.

SPECIFICATIONS

Metric

Order No.	Range (mm)	Graduation (mm)	Graduation features	Stem dia. (mm)	Stem	Spindle pitch (mm)	Maximum permissible error J_{MPE} (µm)
152-390	0 - 25	0.005	for Y axis, bidirectional	18	Plain	1	±2
152-389							

- Measuring face: Material/Carbide tip (**152-389**/**390** are alloy tool steel), Hardness/90 HRA or more (**152-389**/**390** are 60 HRC or more), Lapped
- Scale finishing: White anodized aluminum

Note: Refer to page B-129 for details of the recommended maximum loading limit.

DIMENSIONS

Unit: mm

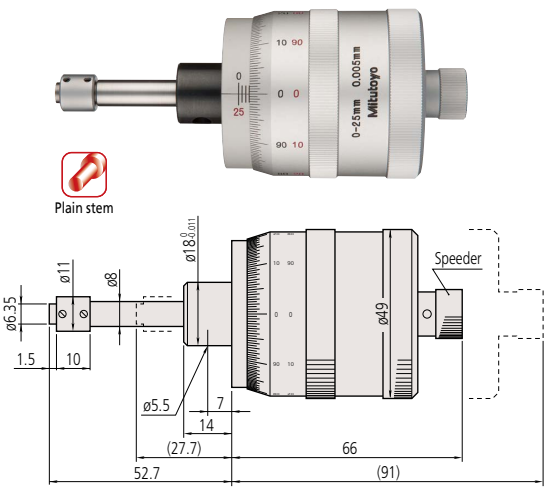

152-390 Mass: 270 g

- The thimble can be rotated to a better reading position while maintaining the spindle position.

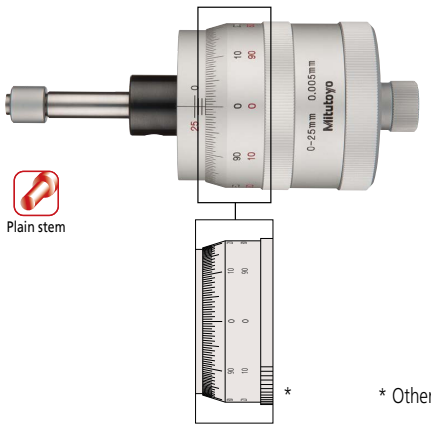

152-389

* Other dimensions are the same as **152-390**.

( ): with spindle fully retracted.

Mitutoyo reserves the right to change any or all aspects of any product specification, including prices, designs and service content, without notice.

Micrometer Heads
SERIES 197 — Long Stroke Non-rotating Spindle

- Large thimble micrometer head with non-rotating spindle.
- Floating thimble allows easy zero setting at any spindle position.
- Dual-spindle mechanism for quick feed of 1 mm/rev (standard models: 0.5 mm/rev).



197-101

DIMENSIONS

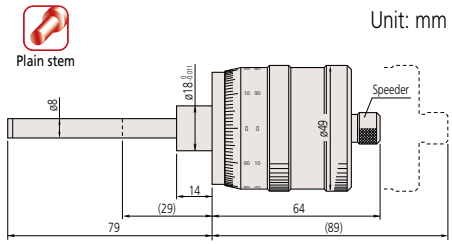

197-101 Mass: 300 g
( ): with spindle fully retracted.

SPECIFICATIONS

Metric

Order No.	Range	Graduation	Graduation features	Stem dia.	Stem	Spindle end	Spindle pitch	Maximum permissible error J_{MPE}
197-101	0 - 50 mm	0.005 mm	Bidirectional	18 mm	Plain	Flat (carbide tip)	1 mm	±5 µm

Inch

Order No.	Range	Graduation	Graduation features	Stem dia.	Stem	Spindle end	Spindle pitch	Maximum permissible error J_{MPE}
197-201	0 - 2 in	0.0002 in	Bidirectional	0.709 in	Plain	Flat (carbide tip)	0.05 in	±0.0001 in

- Measuring face: Material/Carbide tip, Hardness/90 HRA or more, Lapped
- Scale finishing: White anodized aluminum

Note: Refer to page B-129 for details of the recommended maximum loading limit.

Micrometer Heads
SERIES 153 — High Accuracy and Resolution

- Fine graduation and high resolution model.
- Non-rotating spindle type.



153-301

DIMENSIONS

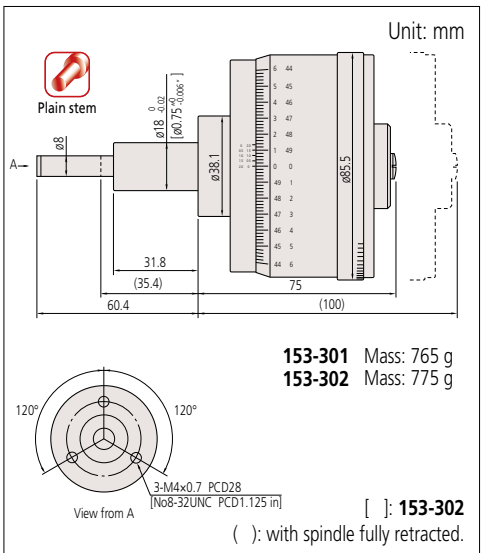

153-301 Mass: 765 g
153-302 Mass: 775 g
[ ]: **153-302**
( ): with spindle fully retracted.

SPECIFICATIONS

Metric

Order No.	Range	Graduation	Graduation features	Stem dia.	Stem	Spindle end	Spindle pitch	Maximum permissible error J_{MPE}*
153-301	0 - 25 mm	0.0005 mm (vernier)	Bidirectional	18 mm	Plain	Flat (carbide tip)	0.5 mm	±1/±0.5 µm

Inch

Order No.	Range	Graduation	Graduation features	Stem dia.	Stem	Spindle end	Spindle pitch	Maximum permissible error J_{MPE}*
153-302	0 - 1 in	0.00001 in (vernier)	Bidirectional	0.75 in	Plain	Flat (carbide tip)	0.025 in	±0.00005 in/ ±0.00003 in

- Measuring face: Material/Carbide tip, Hardness/90 HRA or more, Lapped
- Scale finishing: White anodized aluminum

* Wide range/narrow range

Note: Refer to page B-129 for details of the recommended maximum loading limit.

Mitutoyo reserves the right to change any or all aspects of any product specification, including prices, designs and service content, without notice.

Micrometer Heads
SERIES 250 — Digit Counter Type

• Digit counter for easy reading of spindle movement.



250-301

SPECIFICATIONS

Metric

Order No.	Range (mm)	Graduation (mm)	Stem dia. (mm)	Stem	Spindle end	Spindle pitch (mm)	Graduation features	Maximum permissible error J_{MPE} (µm)
250-301	0 - 25	0.01	10	Plain	Flat (carbide tip)	0.5	—	±2

Inch

Order No.	Range (in)	Graduation (in)	Stem dia. (in)	Stem	Spindle end	Spindle pitch (in)	Graduation features	Maximum permissible error J_{MPE} (in)
250-312	0 - 1	0.0001	0.375	Plain	Flat (carbide tip)	0.025	Vernier scale	±.0001

• Measuring face: Material/Carbide tip, Hardness/90 HRA or more, Lapped
• Scale finishing: Satin-chrome plated
Note: Refer to page B-129 for details of the recommended maximum loading limit.

DIMENSIONS

Unit: mm

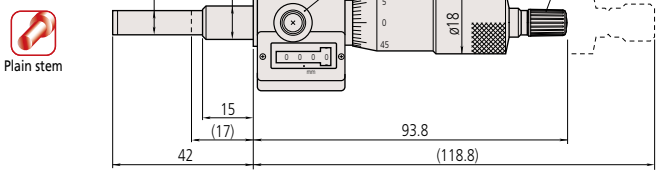

250-301 Mass: 165 g

( ): with spindle fully retracted.

Micro Jack
SERIES 7

• Used for accurate leveling of machines, surface plates, and other precision instruments.
• Zero-setting is possible at any position.
• Easy adjustment under heavy load.



7850

SPECIFICATIONS

Metric

Order No.	Range (mm)	Graduation (mm)	Remarks (kg)	Handle power at the max. loading (N)
7850	60 - 75	0.01	Max. load: 400	90

• Measuring face: Material/Alloy tool steel, Hardness/60 HRC or more, Lapped
• Scale finishing: Satin-chrome plated
Note: Refer to page B-129 for details of the recommended maximum loading limit.

DIMENSIONS

Unit: mm

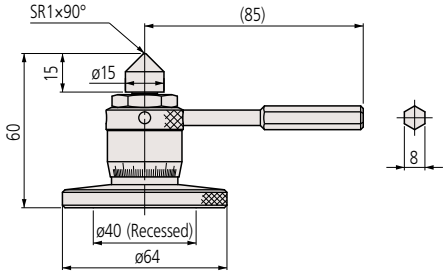

Measurement example



Mitutoyo reserves the right to change any or all aspects of any product specification, including prices, designs and service content, without notice.

Micrometer Head Mounting Fixtures

• Manufacturing brackets to mount micrometer heads for each particular application can be laborious and costly. Mitutoyo offers various types of fixtures for micrometer heads to meet a wide range of applications. These fixtures are made of nickel-plated cast iron.



SPECIFICATIONS

Mounting hole size

Micrometer Head	Fixtures (**Order No.**)	Mounting hole size
148 Series	**303560, 303562, 303564, 303566** **303559, 303561, 303563, 303565**	ø9.5×9.5 long for plain stem or stem locknut type micrometer heads
149 Series	**303569, 303571, 303573, 303575** **303568, 303570, 303572, 303574**	ø9.5×15 long for plain stem or stem locknut type micrometer heads
150 Series	**303579, 303581, 303583, 303585** **303578, 303580, 303582, 303584**	ø10×15 long for plain stem or stem locknut type micrometer heads

Note 1: Supplied with a socket head screw (M3×0.5×12) for fixtures to be used with a micrometer head without stem locknut (plain stem type micrometer head).
Note 2: Refer to page B-129 for details of the recommended maximum loading limit.

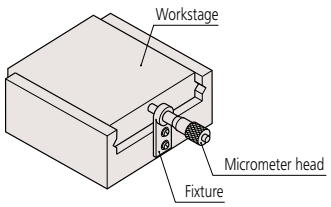

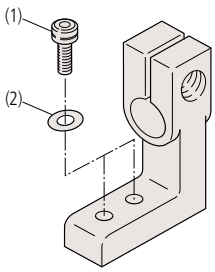

SPECIFICATIONS

Recommended socket head screws for the fixtures

Fixtures (**Order No.**)	Socket head screw (1)	Washer (2)
303559, 303560, 303561, 303562, 303563, 303564 **303565, 303566**	M3×0.5×8 M3×0.5×12	Small, Nominal dia.: 3 Small, Nominal dia.: 3
303568, 303569, 303570, 303571, 303572, 303573 **303578, 303579, 303580, 303581, 303582, 303583**	M4×0.7×10	Small, Nominal dia.: 4
303574, 303575 **303584, 303585**	M4×0.7×12	Small, Nominal dia.: 4

Note: Refer to page B-129 for details of the recommended maximum loading limit.

Mitutoyo reserves the right to change any or all aspects of any product specification, including prices, designs and service content, without notice.

Micrometer Heads Mounting Fixtures

Fixtures for micrometer heads with stem locknut

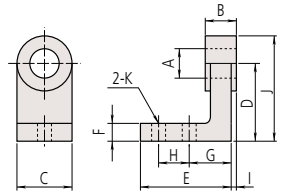

(Unit: mm)

Order No.	A	B	C	D	E	F	G	H	I	J	K
303559	ø9.5	6	15	20	24	5	11	8	0.5	27.5	ø3.4
303568		11.5	20	30	35	7	16	12	1.75	40	ø4.5
303578	ø10										

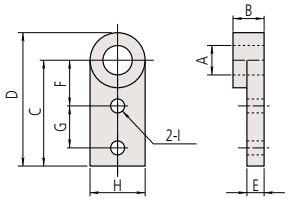

(Unit: mm)

Order No.	A	B	C	D	E	F	G	H	I
303563	ø9.5	6	30	37.5	4.5	15	10	15	ø3.4
303572		11.5	40	50	6.5	18	15	20	ø4.5
303582	ø10								

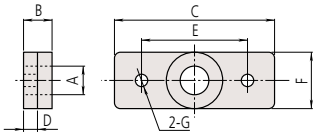

(Unit: mm)

Order No.	A	B	C	D	E	F	G
303561	ø9.5	6	40	3.5	30	15	ø3.4
303570		11.5	60	5.5	40	20	ø4.5
303580	ø10						

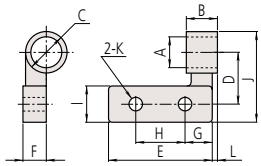

(Unit: mm)

Order No.	A	B	C	D	E	F	G	H	I	J	K	L
303565	ø9.5	6	ø15	15	25	8.5	7.5	10	10	27.5	ø3.4	0.75
303574		11.5		20	40		10	20	15	35	ø4.5	1.25
303584	ø10											

Fixtures for plain stem type micrometer heads

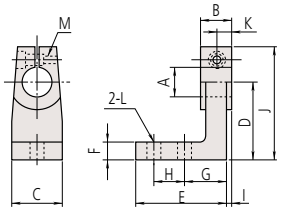

(Unit: mm)

Order No.	A	B	C	D	E	F	G	H	I	J	K	L	M
303560	ø9.5	9	15	20	23	5	11	8	1.5	3.25	4.5	ø3.4	M3x 0.5
303569		14.5	20	30	35	7	16	12	3.25	4.25	7.25	ø4.5	
303579	ø10												

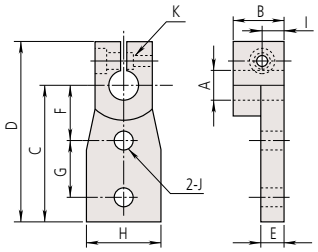

(Unit: mm)

Order No.	A	B	C	D	E	F	G	H	I	J	K
303564	ø9.5	9	30	42.5	4	15	10	15	4.5	ø3.4	M3x 0.5
303573		14.5	40	52.5	6	18	15	20	7.25	ø4.5	
303583	ø10										

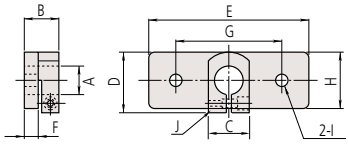

(Unit: mm)

Order No.	A	B	C	D	E	F	G	H	I	J
303562	ø9.5	9	15	20	40	3	30	15	ø3.4	M3x 0.5
303571		14.5		22.5	60	5	40	20	ø4.5	
303581	ø10									

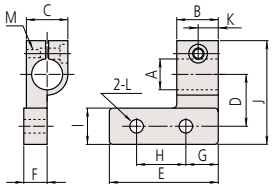

(Unit: mm)

Order No.	A	B	C	D	E	F	G	H	I	J	K	L	M
303566	ø9.5	9	15	15	25	8.5	7.5	10	10	32.5	4.5	ø3.4	M3x 0.5
303575		14.5		20	40		10	20	15	40	7.25	ø4.5	
303585	ø10												

Mitutoyo reserves the right to change any or all aspects of any product specification, including prices, designs and service content, without notice.

Precision Leadscrews

Main applications:
- Precision feed stages
- Fine adjustment of optical elements (mirrors, prisms)
- Fiber optic centering devices
- Various assembly and adjustment jigs

- Mitutoyo manufacture simple and less expensive precision leadscrews for precise positioning mechanisms and fine-feed mechanisms, in addition to standard micrometer heads.
- Mitutoyo also manufacture leadscrews with special specifications, such as 0.25 mm pitch, as well as those with the standard 0.5 mm feed pitch and with dimensions and forms that meet customer requirements.



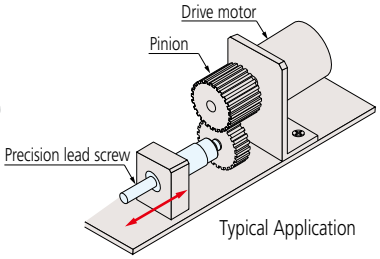

SPECIFICATIONS

Order No.	Model*	Range (mm)	Feed pitch (mm)	Feed accuracy (μm)	Stem diameter (mm)	Tip diameter (mm)	Tail diameter (mm)	Screw nominal diameter	Sleeve diameter (mm)	Measuring face	Mass (g)
04AZA160	**AS-6.5**	0 - 6.5	0.5	±5	ø6 $^{0}_{-0.008}$	ø3.5	ø3 $^{0}_{-0.01}$	M4.5×0.5	ø7	Hardened	10
04AZA161	**BS-6.5**										11
04AZA162	**AS-13**	0 - 13		±2	ø9.5 $^{0}_{-0.009}$	ø5	ø5 $^{0}_{-0.012}$	M7.35×0.5	ø10.5		27
04AZA163	**BS-13**										30
04AZA164	**AS-25**	0 - 25			ø10 $^{0}_{-0.009}$	ø6.35	ø6 $^{0}_{-0.015}$		ø12	Carbide tip	61
04AZA165	**BS-25**										64

- Measuring face: Material/Alloy tool steel (**AS-25** and **BS-25** are Carbide tip), Hardness/60 HRC or more (**AS-25** and **BS-25** are 90 HRA or more), Lapped
- Durability: 100,000 operations are guaranteed (use condition: 4 kg load; 2 kg for **AS-6.5** and **BS-6.5**)

* AS type: Flat spindle tip without nut, BS type: Spherical spindle tip with nut

Note: Refer to page B-129 for details of the recommended maximum loading limit.

DIMENSIONS

Type AS: Plain Stem

Unit: mm



Plain stem

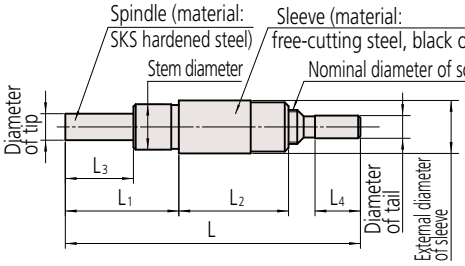

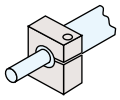

Type BS: Stem with Locknut



Stem locknut

Spherical face

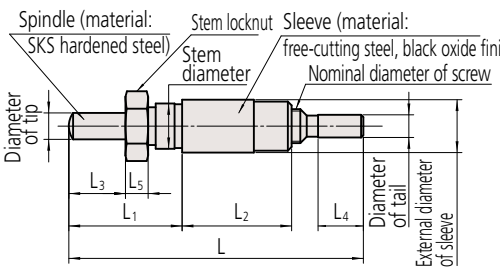

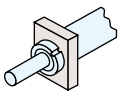

Order No.	L	L1	L2	L3	L4	L5
04AZA160	39	15	14.5	9	6	—
04AZA161				7.5		3
04AZA162	57.5	25	21.5	15.5	8	—
04AZA163						4
04AZA164	96.5	42	39.5	27	10	—
04AZA165						4

Mitutoyo reserves the right to change any or all aspects of any product specification, including prices, designs and service content, without notice.

Quick Guide to Precision Measuring Instruments

Micrometer Heads

Mounted on measuring instruments and precision instruments, micrometer heads are used for various purposes including measurement, feeding and positioning. Recent developments in technology have seen the micrometer head widely utilized in precise feeding devices and cross-travel stages on laser instruments and manipulators, in addition to the usual duties on measurement jigs. In parallel with the application expansion, the customer's needs have increased. To meet customer demands, Mitutoyo provides standard micrometer heads with different measuring ranges, stem type and body size. Furthermore, high-performance types of Digimatic Micrometer Head, 0.1 mm spindle-pitch models (standard 0.5 mm), etc., are now available for the new applications. Mitutoyo also provides customization services for special applications. Micrometer heads with customized spindle tips and precision leadscrews manufactured to customer specification can be offered, even in one-off quantities.

Key Factors in Selection

Key factors in selecting a micrometer head are the measuring range, spindle face, stem, graduations, thimble diameter.

B

Stem

Plain stem

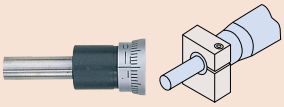

Stem locknut type

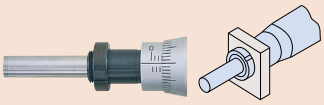

- The stem used to mount a micrometer head is classified as a "plain type" or "clamp nut type" as illustrated above. The stem diameter is manufactured to a nominal Metric or Imperial size with an h6 tolerance.
- The clamp nut stem allows fast and secure clamping of the micrometer head. The plain stem has the advantage of wider application and slight positional adjustment in the axial direction on final installation, although it does requires a split-fixture clamping arrangement or adhesive fixing.
- General-purpose mounting fixtures are available as optional accessories.

Measuring Face

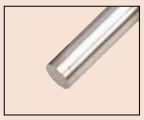

Flat face

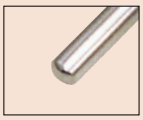

Spherical face

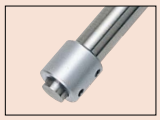

Anti-rotation device

- A flat measuring face is often specified where a micrometer head is used in measurement applications.
- When a micrometer head is used as a feed device, a spherical face can minimize errors due to misalignment (Figure A). Alternatively, a flat face on the spindle can bear against a sphere, such as a carbide ball (Figure B).
- A non-rotating spindle type micrometer head or one fitted with an anti-rotation device on the spindle (Figure C) can be used if a twisting action on the workpiece must be avoided.
- If a micrometer head is used as a stop, then a flat face on both the spindle and the face it contacts provides durability.

Figure A

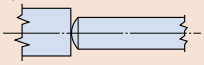

Figure B

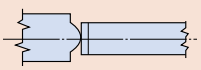

Figure C

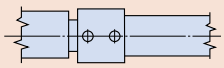

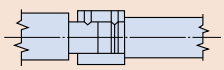

Non-Rotating Spindle

- A non-rotating spindle type head does not exert a twisting action on a workpiece, which may be an important factor in some applications.

Spindle Thread Pitch

- The standard type head has 0.5 mm pitch.
- 1 mm-pitch type: quicker to set than standard type and avoids the possibility of a 0.5 mm reading error. Excellent load-bearing characteristics due to larger screw thread.
- 0.25 mm or 0.1 mm-pitch type
  This type is the best for fine-feed or fine-positioning applications.

Constant-force Device

- A micrometer head fitted with a constant-force device (ratchet or friction thimble) is recommended for measurement applications.
- If using a micrometer head as a stop, or where saving space is a priority, a head without a ratchet is probably the best choice.



Micrometer head with constant-force device

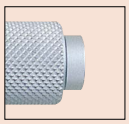

Micrometer head without constant-force device (no ratchet)

Spindle Lock

- If a micrometer head is used as a stop, it is desirable to use a head fitted with a spindle lock so that the setting will not change even under repeated shock loading.

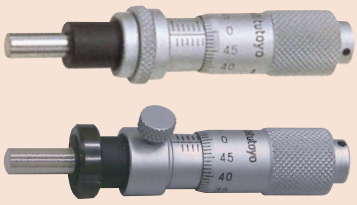

Measuring Range

- When choosing a measuring range for a micrometer head, allow an adequate margin in consideration of the expected measuring range. Six measuring ranges, 5 mm to 50 mm, are available for standard micrometer heads.
- Even if the expected measuring range is small, such as 2 mm to 3 mm, it will be cost effective to choose a 25 mm-stroke model as long as there is enough space for installation.
- If a long measuring range of over 50 mm is required, the concurrent use of a gauge block can extend the effective measuring range. (Figure D)

Figure D

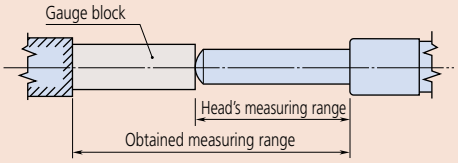

- In this guide, the range (or stroke end) of the thimble is indicated by a dashed line. For stroke ends, consider the thimble as moving to the position indicated by the line when designing the jig.

Ultra-fine Feed Applications

- Dedicated micrometer heads are available for manipulator applications, etc., which require ultra-fine feed or adjustment of spindle.

Thimble Diameter

- The diameter of a thimble greatly affects its usability and the "fineness" of positioning. A small-diameter thimble allows quick positioning whereas a large-diameter thimble allows fine positioning and easy reading of the graduations. Some models combine the advantages of both features by mounting a coarse-feed thimble (speeder) on the large-diameter thimble.

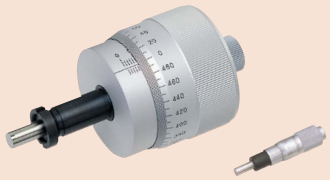

Graduation Styles

- Care is needed when taking a reading from a mechanical micrometer head, especially if the user is unfamiliar with the model.
- The "normal graduation" style, identical to that of an outside micrometer, is the standard. For this style, the reading increases as the spindle retracts into the body.
- On the contrary, in the "reverse graduation" style, the reading increases as the spindle advances out of the body.
- The "bidirectional graduation" style is intended to facilitate measurement in either direction by using black numerals for normal, and red numerals for reverse operation.
- Micrometer heads with a mechanical or electronic digital display, which allow direct reading of a measurement value, are also available. These types are free from misreading errors. A further advantage is that the electronic digital display type can enable computer-based storage and statistical processing of measurement data.

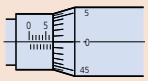

Normal graduation style

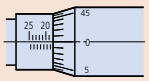

Reverse graduation style

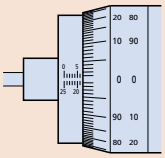

Bidirectional graduation style

Guidelines for Self-made Fixtures

A micrometer head should be mounted by the stem in an accurately machined hole using a clamping method that does not exert excessive force on the stem. There are three common mounting methods as shown below. Method (3) is not recommended. Adopt methods (1) or (2) wherever possible.

(Unit: mm)

Mounting method / Points to keep in mind	(1) Clamp nut				(2) Split-body clamp				(3) Setscrew clamp			
	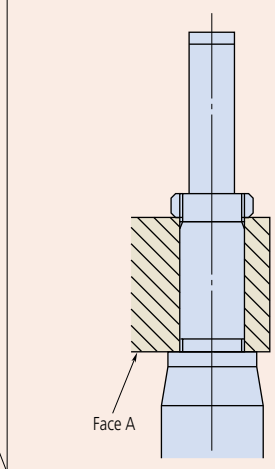 Face A				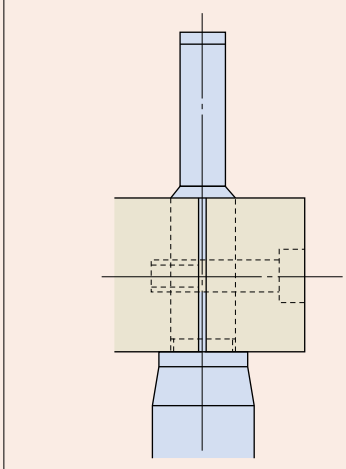				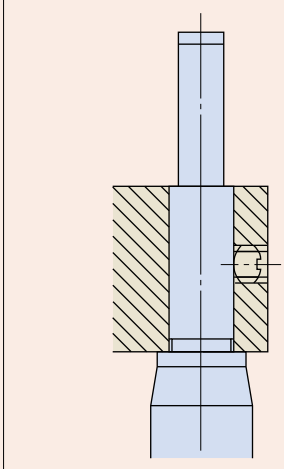			
Stem diameter	ø9.5	ø10	ø12	ø18	ø9.5	ø10	ø12	ø18	ø9.5	ø10	ø12	ø18
Mounting hole Fitting tolerance	G7 +0.005 to +0.020		G7 +0.006 to +0.024		G7 +0.005 to +0.020		G7 +0.006 to +0.024		H5 0 to +0.006		H5 0 to +0.008	
Precautions	Care should be taken to make Face A square to the mounting hole. The stem can be clamped without any problem at squareness within 0.16/6.5.				Remove burrs generated on the wall of the mounting hole by the slitting operation.				M3×0.5 or M4×0.7 is an appropriate size for the setscrew. Limit countersinking into stem to 90°×0.5 and be careful not to damage the stem in the process.			

Maximum Loading Capacity of Micrometer Heads

The maximum loading capacity of a micrometer head depends mainly on the method of mounting and whether the loading is static or dynamic (used as a stop, for example). Therefore the maximum loading capacity of each model cannot be definitely specified. The loading limits recommended by Mitutoyo (at less than 100,000 revolutions if used for measuring within the guaranteed accuracy range) and the results of static load tests using a small micrometer head are given below.

1. Recommended maximum loading limit

		Maximum loading limit
Standard type	Spindle pitch: 0.5 mm	Up to approx. 39.2 N (4 kgf)*
High function type	Spindle pitch: 0.1 mm/0.25 mm	Up to approx. 19.6 N (2 kgf)
	Spindle pitch: 0.5 mm	Up to approx. 39.2 N (4 kgf)
	Spindle pitch: 1.0 mm	Up to approx. 58.8 N (6 kgf)
	Non-rotating spindle	Up to approx. 19.6 N (2 kgf)
	Series 110 micro-fine feed type (with a differential mechanism)	Up to approx. 19.6 N (2 kgf)

* Up to approx. 19.6 N (2 kgf) only for Ultra small models

2. Static load test for micrometer heads (using 148-104 / 148-103 for this test)

(1) Clamp nut

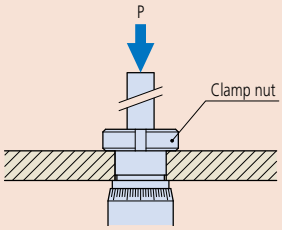

(2) Split-body clamp

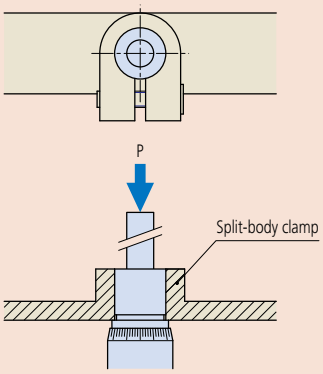

(3) Setscrew clamp

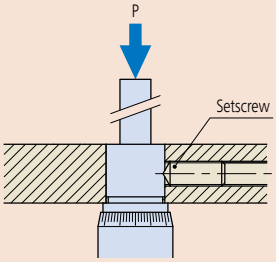

Test method
Micrometer heads were set up as shown and the force at which the head was damaged or pushed out of the fixture when a static load was applied, in direction P, was measured. (In the tests no account was taken of the guaranteed accuracy range.)

Mounting method	Damaging/dislodging load
(1) Clamp nut	Damage to the main unit will occur at 8.63 to 9.8 kN (880 to 1000 kgf).
(2) Split-body clamp	The main unit will be pushed out of the fixture at 0.69 to 0.98 kN (70 to 100 kgf).
(3) Setscrew clamp	Damage to the setscrew will occur at 0.69 to 1.08 kN (70 to 110 kgf).

Note: These load values should only be used as an approximate guide.

Custom-built Products (Product Example Introductions)

Micrometer heads have applications in many fields of science and industry and Mitutoyo offers a wide range of standard models to meet customers' needs. However, in those cases where the standard product is not suitable, Mitutoyo can custom build a head incorporating features better suited to your special application. Please feel free to contact Mitutoyo about the possibilities - even if only one custom-manufactured piece is required.

1. Spindle-end types

- Standard
- Spherical
- Pointed
- Spline
- Tapped
- Flanged
- Blade (for non-rotating spindle type only)

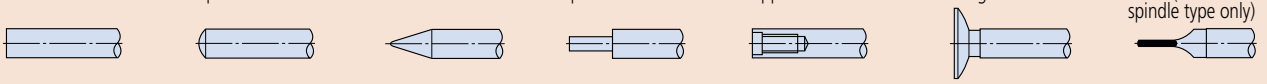

Note: Long spindle type is also available. Please consult Mitutoyo.

2. Stem types

A custom stem can be manufactured to suit the mounting fixture.

- Plain
- Clamp nut
- Threaded
- Flanged

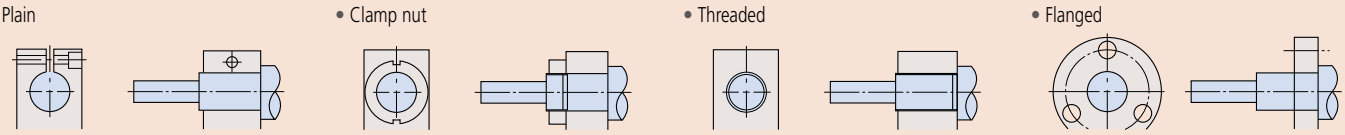

3. Scale graduation schemes

Various barrel and thimble scale graduation schemes, such as reverse and vertical, are available. Please consult Mitutoyo for ordering a custom scheme not shown here.

- Standard
- Reverse
- Vertical

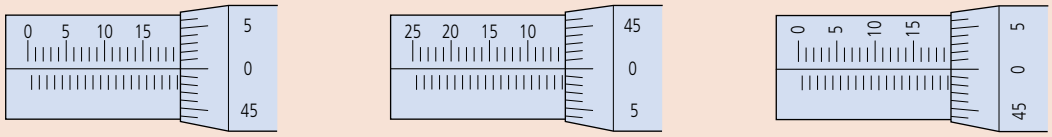

- Reverse vertical
- Offset zero
- Graduations only

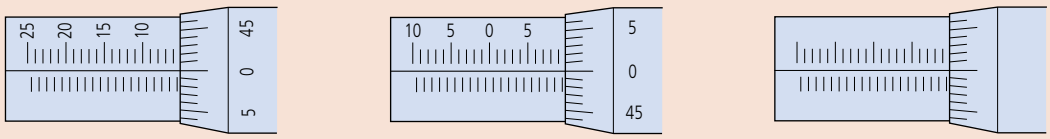

4. Logo engraving

A specific logo can be engraved as required.

5. Motor Coupling

Couplings for providing motor drive to a head can be designed.

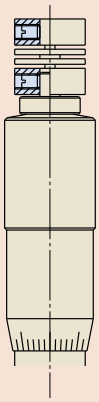

6. Thimble mounting

Thimble mounting methods including a ratchet, setscrew, and hex-socket head screw types are available.

- Ratchet
- Setscrew
- Hex-socket head screw

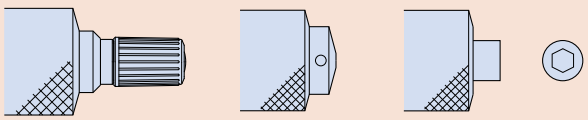

7. Spindle-thread pitch

Pitches of 1 mm for fast-feed applications or 0.25 mm and 0.1 mm for fine-feed can be supplied as alternatives to the standard 0.5 mm. Inch pitches are also supported. Please consult Mitutoyo for details.

8. Lubricant for spindle threads

Lubrication arrangements can be specified by the customer.

9. All-stainless construction

All components of a head can be manufactured in stainless steel.

10. Simple packaging

Large-quantity orders of micrometer heads can be delivered in simple packaging for OEM purposes.

11. Spindle and nut (Precision lead screw)

The spindle can be used as a precision lead screw. The nut is machined in accordance with the specified dimensions.
For details, refer to "Precision Leadscrews" on page B-126.

12. Accuracy inspection certificate

An accuracy inspection certificate can be supplied at extra cost. For detailed information, contact the nearest Mitutoyo Sales Office.



Digimatic Holtest

Refer to pages C-3 to C-6 for details.



Holtest

Refer to pages C-7 to C-12 for details.



ABSOLUTE Borematic

Refer to pages C-13 to C-16 for details.



Inside Micrometers (Caliper Type)

Refer to pages C-25 to C-26 for details.



Bore Gages

Refer to pages C-35 to C-38 for details.

Bore Gages for Blind Holes

Refer to pages C-45 to C-46 for details.

C

Small Tool Instruments Inside Measurement

MeasurLink® ENABLED
Data Management Software by Mitutoyo

Measurement Data Network System

MeasurLink® is a measurement data management system based on databases (SQL Server). You can build a network to manage the measurement results and measuring machines by simply combining the functions necessary for your purpose.

MeasurLink® is a registered trademark of Mitutoyo Corporation in Japan and Mitutoyo America Corporation in the United States.

IP65

IP Codes

These are codes that indicate the degree of protection provided (by an enclosure) for the electrical function of a product against the ingress of foreign bodies, dust and water as defined in IEC standards (IEC 60529: 2001) and JIS C 0920: 2003.
(Refer to page IX)

TÜVRheinland CERTIFIED Dust- and Water-Protected www.tuv.com ID 0000040191

TÜV Rheinland Certification Marks

All products with the marks have passed the IP test carried out by the German accreditation organization, TÜV Rheinland.

PROPRIETARY INSPECTION CERTIFICATE

Measuring Instruments Shipped with Inspection Certificate

Mitutoyo guarantees product quality as a leading precision measuring instrument manufacturer and ships measuring instruments with an inspection certificate that includes inspection data so that customers can use them with confidence.

ABSOLUTE™

ABSOLUTE Linear Encoder

Mitutoyo developed the unique absolute method to retain position information after the power is turned off.
The origin is set once - thereafter the live position is displayed when the power is turned on.

INDEX

Holtest

Digimatic Holtest	C-3
Holtest	C-7
Holtest (Type II)	C-11

Borematic

ABSOLUTE Borematic	C-13

Inside Micrometers

Tubular Inside Micrometers (Single-Rod Type)	C-17
Tubular Inside Micrometers (Extension-Rod Type)	C-19
Tubular Inside Micrometers (Extension-Pipe Type)	C-22
Inside Micrometers (Caliper Type)	C-25
Inside Micrometers (Interchangeable-Rod Type)	C-27
Inside Micro Checker	C-28

Bore Gages

Bore Gages (Extra Small Holes)	C-29
Bore Gage Stand	C-32
Bore Gages (Small Holes)	C-33
Bore Gages	C-35
Bore Gages (Short Leg Type)	C-39
Bore Gages (Micrometer Head)	C-42
Bore Gages (Blind Holes)	C-45
ABSOLUTE Digimatic Bore Gages	C-47
Extension Rod	C-49
Recommended Indicators	C-50
Bore Gage Checker	C-51
Setting Rings	C-52
Quick Guide to Precision Measuring Instruments	C-57

Mitutoyo

Digimatic Holtest
SERIES 468 — Three-point Internal Micrometers

- Three-point internal micrometer with large LCD readout. (Character height 7.4 mm)
- Deep holes can be measured by attaching an Extension Rod (optional).
- Measurements can be made close to the bottom of a blind hole.
- Titanium-coated measuring pins provide excellent durability and impact resistance.
- Two preset values can be stored as reference points.


468-161


468-168


468-174

SPECIFICATIONS

Metric

Order No.	Range*2 (mm)	Resolution (mm)	Maximum permissible error J_{MPE} (µm)*1	Extension Rod (optional)
468-161	6 - 8	0.001	±2 (maximum difference 2)	**952322** (100 mm)
468-162	8 - 10			
468-163	10 - 12			
468-164	12 - 16		±3 (maximum difference 3)	**952621** (150 mm)
468-165	16 - 20			
468-166	20 - 25			**952622** (150 mm)
468-167	25 - 30			
468-168	30 - 40			
468-169	40 - 50			**952623** (150 mm)
468-170	50 - 63			
468-171	62 - 75		±4 (maximum difference 4)	
468-172	75 - 88			
468-173	87 - 100			
468-174	100 - 125		±5 (maximum difference 5)	
468-175	125 - 150			
468-176	150 - 175			
468-177	175 - 200			
468-178	200 - 225		±6 (maximum difference 6)	
468-179	225 - 250			
468-180	250 - 275			
468-181	275 - 300			

Inch / Metric

Order No.	Range*2 (in)	Resolution	Maximum permissible error J_{MPE} (in)*1	Extension Rod (optional)
468-261	0.275 - 0.35	0.00005 in/ 0.001 mm	±0.0001 (maximum difference 0.0001)	**952322** (100 mm)
468-262	0.35 - 0.425			
468-263	0.425 - 0.5			
468-264	0.5 - 0.65		±0.00015 (maximum difference 0.00015)	**952621** (150 mm)
468-265	0.65 - 0.8			
468-266	0.8 - 1			**952622** (150 mm)
468-267	1 - 1.2			
468-268	1.2 - 1.6			
468-269	1.6 - 2			**952623** (150 mm)
468-270	2 - 2.5			
468-271	2.5 - 3		±0.0002 (maximum difference 0.0002)	
468-272	3 - 3.5			
468-273	3.5 - 4			
468-274	4 - 5	0.0001 in/ 0.001 mm	±0.00025 (maximum difference 0.00025)	
468-275	5 - 6			
468-276	6 - 7			
468-277	7 - 8			
468-278	8 - 9		±0.0003 (maximum difference 0.0003)	
468-279	9 - 10			
468-280	10 - 11			
468-281	11 - 12			

- Battery: SR44 (1 pc.), **938882**, for initial operational checks (standard accessory)
- Battery life: Approx. 1.2 years under normal use • Scale type: Electromagnetic induction-type rotary encoder

*1 Additionally, the difference in permissible error allowable is limited to a value within this range, as given in parentheses, and is measured with the entire measuring surface in contact with the object measured.

*2 The measurement range cannot be enlarged by measuring heads that are not standard-supplied (the accuracy is not guaranteed).

Note: Setting rings are optional.

DIMENSIONS

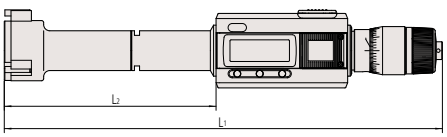

Unit: mm

Range	L_2*	L_1
6 - 8, 8 - 10, 10 - 12 mm	59	175 - 177
12 - 16, 16 - 20 mm	84	197.5 - 201.5
20 - 25, 25 - 30 mm	93	206.9 - 211.9
30 - 40, 40 - 50 mm	103.8	214.7 - 224.7
50 - 63, 62 - 75, 75 - 88, 87 - 100 mm	105.4	219.6 - 232.6
100 - 125, 125 - 150, 150 - 175, 175 - 200, 200 - 225, 225 - 250, 250 - 275, 275 - 300 mm	151.4	286.3 - 311.3

* L_2 is maximum depth of measurement possible.
Note: External view differs depending on measurement range.

MeasurLink® ENABLED
Data Management Software by Mitutoyo

IP65

Dust- and Water-Protected
TÜVRheinland CERTIFIED
www.tuv.com ID 0000021605

PROPRIETARY INSPECTION CERTIFICATE

Measurement example



You can measure the diameter of a blind hole to the bottom.

Range (mm)	L_3 (mm)	L_4 (mm)	L_5 (mm)
6 - 12	2 or below	—	2.5
12 - 20	0.3 or below	5.6	3.5
20 - 30		8.3	5.2
30 - 50		13.0	10.0
50 - 100		17.0	14.0
100 - 300	12.4 or below	21.0	13.8

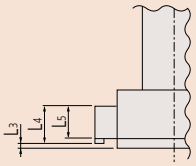

Functions

Zero-setting
Origin restoration
Data hold
2-point Preset
Function lock
inch/mm readout (inch/mm type)
Automatic power ON/OFF
Error alarm
Data output

Optional Accessories

Order No.	Type	description
05CZA662	B	Connecting cable (1 m)
05CZA663	B	Connecting cable (2 m)
06AFM380B	B	USB Input Tool Direct (2 m)
02AZD790B	B	Connecting cables for **U-WAVE-T** (160 mm)
02AZE140B	B	Connecting cables for **U-WAVE-T** For foot switch

Mounting bracket (optional)

04AZB157

For details of Special-order Products, refer to page C-57.

Mitutoyo reserves the right to change any or all aspects of any product specification, including prices, designs and service content, without notice.

Optional Accessories

Order No.	Type	description
05CZA662	B	Connecting cable (1 m)
05CZA663	B	Connecting cable (2 m)
06AFM380B	B	USB Input Tool Direct (2 m)
02AZD790B	B	Connecting cables for **U-WAVE-T** (160 mm)
02AZE140B	B	Connecting cables for **U-WAVE-T** For foot switch

Interchangeable-Head Sets



468-971



468-972



468-973



468-974

Metric

Set Order No.	Range* (mm)	Content of set
468-971	6 - 12	Display unit 6 - 12 mm 1 pc. Measuring head 6 - 8 mm 1 pc. 8 - 10 mm 1 pc. 10 - 12 mm 1 pc. Setting ring (ø8, ø10) 1 pc. each Extension rod (100 mm) 1 pc. Spanner 2 pcs. Hex wrench 1 pc. Phillips screwdriver 1 pc.
468-972	12 - 20	Display unit 12 - 20 mm 1 pc. Measuring head 12 - 16 mm 1 pc. 16 - 20 mm 1 pc. Setting ring (ø16) 1 pc. Extension rod (150 mm) 1 pc. Spanner 2 pcs. Hex wrench 1 pc. Phillips screwdriver 1 pc.
468-973	20 - 50	Display unit 20 - 50 mm 1 pc. Measuring head 20 - 25 mm 1 pc. 25 - 30 mm 1 pc. 30 - 40 mm 1 pc. 40 - 50 mm 1 pc. Setting ring (ø25, ø40) 1 pc. each Extension rod (150 mm) 1 pc. Spanner 2 pcs. Hex wrench 1 pc. Phillips screwdriver 1 pc.
468-974	50 - 100	Display unit 50 - 100 mm 1 pc. Measuring head 50 - 63 mm 1 pc. 62 - 75 mm 1 pc. 75 - 88 mm 1 pc. 87 - 100 mm 1 pc. Setting ring (ø62, ø87) 1 pc. each Extension rod (150 mm) 1 pc. Spanner 2 pcs. Hex wrench 1 pc. Phillips screwdriver 1 pc.

Inch / Metric

Set Order No.	Range* (in)	Content of set
468-976	0.275 - 0.5	Display unit 0.275 - 0.5 in 1 pc. Measuring head 0.275 - 0.35 in 1 pc. 0.35 - 0.425 in 1 pc. 0.425 - 0.5 in 1 pc. Setting ring 1 pc. each (0.35 in DIA., 0.425 in DIA.) Extension rod (100 mm) 1 pc. Spanner 2 pcs. Hex wrench 1 pc. Phillips screwdriver 1 pc.
468-977	0.5 - 0.8	Display unit 0.5 - 0.8 in 1 pc. Measuring head 0.5 - 0.65 in 1 pc. 0.65 - 0.8 in 1 pc. Setting ring (0.65 in DIA.) 1 pc. Extension rod (150 mm) 1 pc. Spanner 2 pcs. Hex wrench 1 pc. Phillips screwdriver 1 pc.
468-978	0.8 - 2	Display unit 0.8 - 2 in 1 pc. Measuring head 0.8 - 1 in 1 pc. 1 - 1.2 in 1 pc. 1.2 - 1.6 in 1 pc. 1.6 - 2 in 1 pc. Setting ring 1 pc. each (1 in DIA., 1.6 in DIA.) Extension rod (150 mm) 1 pc. Spanner 2 pcs. Hex wrench 1 pc. Phillips screwdriver 1 pc.
468-979	2 - 4	Display unit 2 - 4 in 1 pc. Measuring head 2 - 2.5 in 1 pc. 2.5 - 3 in 1 pc. 3 - 3.5 in 1 pc. 3.5 - 4 in 1 pc. Setting ring 1 pc. each (2.5 in DIA., 3.5 in DIA.) Extension rod (150 mm) 1 pc. Spanner 2 pcs. Hex wrench 1 pc. Phillips screwdriver 1 pc.

* The measurement range cannot be enlarged by measuring heads that are not standard-supplied (the accuracy is not guaranteed).

Mitutoyo reserves the right to change any or all aspects of any product specification, including prices, designs and service content, without notice.

Interchangeable-Head Sets





Setting rings are supplied as standard (ø125, ø175) (Packed separately)

468-975

Metric

Set Order No.	Range* (mm)	Content of set	
468-975	100 - 200	Display unit	
		100 - 200 mm	1 pc.
		Measuring head	
		100 - 125 mm	1 pc.
		125 - 150 mm	1 pc.
		150 - 175 mm	1 pc.
		175 - 200 mm	1 pc.
		Setting ring (ø125, ø175)	1 pc. each
		Extension rod (150 mm)	1 pc.
		Spanner	2 pcs.
		Hex wrench	1 pc.
		Phillips screwdriver	1 pc.

Inch / Metric

Set Order No.	Range* (in)	Content of set	
468-980	4 - 8	Display unit	
		4 - 8 in	1 pc.
		Measuring head	
		4 - 5 in	1 pc.
		5 - 6 in	1 pc.
		6 - 7 in	1 pc.
		7 - 8 in	1 pc.
		Setting ring (5 in DIA., 7 in DIA.)	1 pc. each
		Extension rod (150 mm)	1 pc.
		Spanner	2 pcs.
		Hex wrench	1 pc.
		Phillips screwdriver	1 pc.

* The measurement range cannot be enlarged by measuring heads that are not standard-supplied (the accuracy is not guaranteed).

Accessories (optional)

Refer to page C-4.

Mitutoyo reserves the right to change any or all aspects of any product specification, including prices, designs and service content, without notice.

Accessories (optional)

Refer to page C-4.

Non-Interchangeable-Head Sets


468-981


468-982


468-983


468-984


468-985

Metric

Set Order No.	Range*2 (mm)	Content of set	Extension rod (optional)
468-981	6 - 12	Display unit 6 - 8 mm 1 pc. 8 - 10 mm 1 pc. 10 - 12 mm 1 pc. Setting ring (ø8, ø10) 1 pc. each Spanner 2 pcs. Hex wrench 1 pc. Phillips screwdriver 1 pc.	100 mm 1 pc.
468-982	12 - 25	Display unit 12 - 16 mm 1 pc. 16 - 20 mm 1 pc. 20 - 25 mm 1 pc. Setting ring (ø16, ø20) 1 pc. each Spanner 2 pcs. Hex wrench 1 pc. Phillips screwdriver 1 pc.	150 mm 2 pcs.*1
468-983	25 - 50	Display unit 25 - 30 mm 1 pc. 30 - 40 mm 1 pc. 40 - 50 mm 1 pc. Setting ring (ø30, ø40) 1 pc. each Spanner 1 pc. Hex wrench 1 pc. Phillips screwdriver 1 pc.	150 mm 1 pc.
468-984	50 - 75	Display unit 50 - 63 mm 1 pc. 62 - 75 mm 1 pc. Setting ring (ø62) 1 pc. Spanner 1 pc. Hex wrench 1 pc. Phillips screwdriver 1 pc.	150 mm 1 pc.
468-985	75 - 100	Display unit 75 - 88 mm 1 pc. 87 - 100 mm 1 pc. Setting ring (ø87) 1 pc. Spanner 1 pc. Hex wrench 1 pc. Phillips screwdriver 1 pc.	150 mm 1 pc.

Inch / Metric

Set Order No.	Range*2 (in)	Content of set	Extension rod (optional)
468-986	0.275 - 0.5	Display unit 0.275 - 0.35 in 1 pc. 0.35 - 0.425 in 1 pc. 0.425 - 0.5 in 1 pc. Setting ring 1 pc. each (0.35 in DIA., 0.425 in DIA.) Spanner 2 pcs. Hex wrench 1 pc. Phillips screwdriver 1 pc.	100 mm 1 pc.
468-987	0.5 - 1	Display unit 0.5 - 0.65 in 1 pc. 0.65 - 0.8 in 1 pc. 0.8 - 1 in 1 pc. Setting ring 1 pc. each (0.65 in DIA., 0.8 in DIA.) Spanner 2 pcs. Hex wrench 1 pc. Phillips screwdriver 1 pc.	150 mm 2 pcs.*1
468-988	1 - 2	Display unit 1 - 1.2 in 1 pc. 1.2 - 1.6 in 1 pc. 1.6 - 2 in 1 pc. Setting ring 1 pc. each (1.2 in DIA., 1.6 in DIA.) Spanner 1 pc. Hex wrench 1 pc. Phillips screwdriver 1 pc.	150 mm 1 pc.
468-989	2 - 3	Display unit 2 - 2.5 in 1 pc. 2.5 - 3 in 1 pc. Setting ring (2.5 in DIA.) 1 pc. Spanner 1 pc. Hex wrench 1 pc. Phillips screwdriver 1 pc.	150 mm 1 pc.
468-990	3 - 4	Display unit 3 - 3.5 in 1 pc. 3.5 - 4 in 1 pc. Setting ring (3.5 in DIA.) 1 pc. Spanner 1 pc. Hex wrench 1 pc. Phillips screwdriver 1 pc.	150 mm 1 pc.

*1 Total 2 pcs. of extension rods: 1 pc. of Order No. **952621** (for measuring range 12 to 16 mm, 16 to 20 mm) and Order No. **952622** (for measuring range 20 to 25 mm).
Two extension rods cannot be connected due to the different mounting positions.

*2 The measurement range cannot be enlarged by measuring heads that are not standard-supplied (the accuracy is not guaranteed).

Mitutoyo reserves the right to change any or all aspects of any product specification, including prices, designs and service content, without notice.

Holtest
SERIES 368 — Three-point/Two-point Internal Micrometers

- Titanium-coated measuring pins on the three-point type (over 6 mm range models) provide excellent durability and impact resistance.
- Three-point internal micrometer with measuring range 6 mm or longer allows stable measurement through self-centering.
- Measurement can be made close to the bottom of a blind hole.
- Deep holes can be measured by attaching an Extension Rod (optional) which is available on models over 6 mm (0.275 in) measuring range.

Measurement example

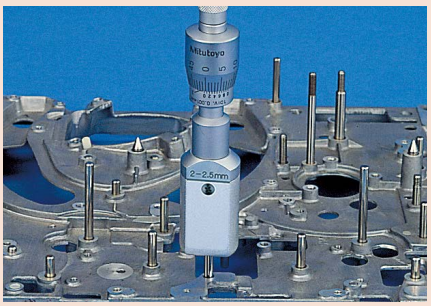



368-001
(Two-point contact type)



368-168
(Three-point contact type)

SPECIFICATIONS

Metric

Order No.	Range*2 (mm)	Graduation (mm)	Maximum permissible error J_{MPE} (µm)*1	Extension Rod (optional)
(Two-point)				
368-001	2 - 2.5			
368-002	2.5 - 3			
368-003	3 - 4			
368-004	4 - 5			
368-005	5 - 6	0.001	±2 (maximum difference 2)	—
(Three-point)				
368-161	6 - 8			**952322** (100 mm)
368-162	8 - 10			
368-163	10 - 12			
368-164	12 - 16			**952621** (150 mm)
368-165	16 - 20			
368-166	20 - 25		±3 (maximum difference 3)	
368-167	25 - 30			**952622** (150 mm)
368-168	30 - 40			
368-169	40 - 50			
368-170	50 - 63			
368-171	62 - 75		±4 (maximum difference 4)	
368-172	75 - 88	0.005		
368-173	87 - 100			
368-174	100 - 125			
368-175	125 - 150		±5 (maximum difference 5)	**952623** (150 mm)
368-176	150 - 175			
368-177	175 - 200			
368-178	200 - 225			
368-179	225 - 250		±6 (maximum difference 6)	
368-180	250 - 275			
368-181	275 - 300			

Inch

Order No.	Range*2 (in)	Graduation (in)	Maximum permissible error J_{MPE} (in)*1	Extension Rod (optional)
(Two-point)				
368-021	0.08 - 0.1			
368-022	0.1 - 0.12			
368-023	0.12 - 0.16			
368-024	0.16 - 0.2			
368-025	0.2 - 0.24	0.0001	±0.0001 (maximum difference 0.0001)	—
368-026	0.24 - 0.28			
(Three-point)				
368-261	0.275 - 0.35			**952322** (100 mm)
368-262	0.35 - 0.425			
368-263	0.425 - 0.5			
368-264	0.5 - 0.65			**952621** (150 mm)
368-265	0.65 - 0.8			
368-266	0.8 - 1		±0.00015 (maximum difference 0.00015)	
368-267	1 - 1.2			**952622** (150 mm)
368-268	1.2 - 1.6			
368-269	1.6 - 2			
368-270	2 - 2.5			
368-271	2.5 - 3		±0.0002 (maximum difference 0.0002)	
368-272	3 - 3.5	0.0002		
368-273	3.5 - 4			
368-274	4 - 5		±0.00025 (maximum difference 0.00025)	**952623** (150 mm)
368-275	5 - 6			
368-276	6 - 7			
368-277	7 - 8			
368-278	8 - 9		±0.0003 (maximum difference 0.0003)	
368-279	9 - 10			
368-280	10 - 11			
368-281	11 - 12			

*1 Additionally, the difference in permissible error allowable is limited to a value within this range, as given in parentheses, and is measured with the entire measuring surface in contact with the object measured.
*2 The measurement range cannot be enlarged by measuring heads that are not standard-supplied (the accuracy is not guaranteed).
Note: Setting rings are optional.

Mitutoyo reserves the right to change any or all aspects of any product specification, including prices, designs and service content, without notice.

You can measure the diameter of a blind hole to the bottom.

Range (mm)	L_3 (mm)	L_4 (mm)	L_5 (mm)
2 - 6	—	—	2
6 - 12	2 or below	—	2.5
12 - 20	0.3 or below	5.6	3.5
20 - 30		8.3	5.2
30 - 50		13.0	10.0
50 - 100		17.0	14.0
100 - 300	12.4 or below	21.0	13.8

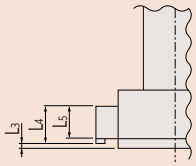

For details of Special-order Products, refer to page C-57.

DIMENSIONS

Unit: mm

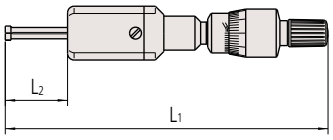

Range	L_2	L_1
2 - 2.5, 2.5 - 3 mm	12	103.5 - 104
3 - 4, 4 - 5, 5 - 6 mm	22	113 - 114

Note: External appearance differs depending on the measuring range.

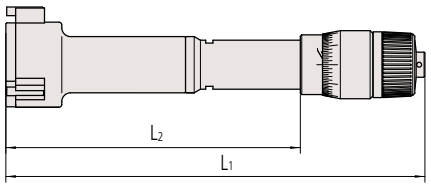

Range	L_2	L_1
6 - 8, 8 - 10, 10 - 12 mm	59	102 - 104
12 - 16, 16 - 20 mm	82	126 - 130
20 - 25, 25 - 30 mm	94	137 - 142
30 - 40, 40 - 50 mm	102	145 - 155
50 - 63, 62 - 75, 75 - 88, 87 - 100 mm	105	150 - 163
100 - 125, 125 - 150, 150 - 175, 175 - 200, 200 - 225, 225 - 250, 250 - 275, 275 - 300 mm	161	227 - 252

Note: External appearance differs depending on the measuring range.

Mitutoyo reserves the right to change any or all aspects of any product specification, including prices, designs and service content, without notice.

Holtest
SERIES 368 — Three-point/Two-point Internal Micrometers

Non-Interchangeable-Head Sets



368-906



368-907



368-911



368-912

Metric

Set Order No.	Range* (mm)	Graduation (mm)	Content of Set
(Two-point) **368-906**	2 - 3	0.001	Micrometer head unit 2 - 2.5 mm 1 pc. 2.5 - 3 mm 1 pc. Setting ring (ø2.5) 1 pc. Hex wrench 1 pc.
368-907	3 - 6		Micrometer head unit 3 - 4 mm 1 pc. 4 - 5 mm 1 pc. 5 - 6 mm 1 pc. Setting ring (ø4, ø5) 1 pc. each Hex wrench 1 pc.
(Three-point) **368-911**	6 - 12		Micrometer head unit 6 - 8 mm 1 pc. 8 - 10 mm 1 pc. 10 - 12 mm 1 pc. Setting ring (ø8, ø10) 1 pc. each Extension rod (100 mm) 1 pc. Spanner 2 pcs. Hex wrench 1 pc.
368-912	12 - 20	0.005	Micrometer head unit 12 - 16 mm 1 pc. 16 - 20 mm 1 pc. Setting ring (ø16) 1 pc. Extension rod (150 mm) 1 pc. Spanner 2 pcs. Hex wrench 1 pc.

Inch

Set Order No.	Range* (in)	Graduation (in)	Content of Set
(Two-point) **368-926**	0.08 - 0.12	0.0001	Micrometer head unit 0.08 - 0.1 in 1 pc. 0.1 - 0.12 in 1 pc. Setting ring (0.1 in DIA.) 1 pc. Hex wrench 1 pc.
368-927	0.12 - 0.28		Micrometer head unit 0.12 - 0.16 in 1 pc. 0.16 - 0.2 in 1 pc. 0.2 - 0.24 in 1 pc. 0.24 - 0.28 in 1 pc. Setting ring (0.16 in DIA., 0.24 in DIA.) 1 pc. each Hex wrench 1 pc.
(Three-point) **368-916**	0.275 - 0.5		Micrometer head unit 0.275 - 0.35 in 1 pc. 0.35 - 0.425 in 1 pc. 0.425 - 0.5 in 1 pc. Setting ring (0.35 in DIA., 0.5 in DIA.) 1 pc. each Extension rod (100 mm) 1 pc. Spanner 2 pcs. Hex wrench 1 pc.
368-917	0.5 - 0.8	0.0002	Micrometer head unit 0.5 - 0.65 in 1 pc. 0.65 - 0.8 in 1 pc. Setting ring (0.65 in DIA.) 1 pc. Extension rod (150 mm) 1 pc. Spanner 2 pcs. Hex wrench 1 pc.

* The measurement range cannot be enlarged by measuring heads that are not standard-supplied (the accuracy is not guaranteed).

Mitutoyo reserves the right to change any or all aspects of any product specification, including prices, designs and service content, without notice.

Non-Interchangeable-Head Sets



368-913



368-914





Setting rings are supplied as standard (ø125, ø175) (Packed separately)

368-915

C

Metric

Set Order No.	Range* (mm)	Graduation (mm)	Content of Set
(Three-point) **368-913**	20 - 50	0.005	Micrometer head unit 20 - 25 mm 1 pc. 25 - 30 mm 1 pc. 30 - 40 mm 1 pc. 40 - 50 mm 1 pc. Setting ring (ø25, ø40) 1 pc. each Extension rod (150 mm) 1 pc. Spanner 2 pcs. Hex wrench 1 pc.
368-914	50 - 100		Micrometer head unit 50 - 63 mm 1 pc. 62 - 75 mm 1 pc. 75 - 88 mm 1 pc. 87 - 100 mm 1 pc. Setting ring (ø62, ø87) 1 pc. each Extension rod (150 mm) 1 pc. Spanner 2 pcs. Hex wrench 1 pc.
368-915	100 - 200		Micrometer head unit 100 - 125 mm 1 pc. 125 - 150 mm 1 pc. 150 - 175 mm 1 pc. 175 - 200 mm 1 pc. Setting ring (ø125, ø175) 1 pc. each Extension rod (150 mm) 1 pc. Spanner 2 pcs. Hex wrench 1 pc.

Inch

Set Order No.	Range* (in)	Graduation (in)	Content of Set
(Three-point) **368-918**	0.8 - 2	0.0002	Micrometer head unit 0.8 - 1 in 1 pc. 1 - 1.2 in 1 pc. 1.2 - 1.6 in 1 pc. 1.6 - 2 in 1 pc. Setting ring 1 pc. each (1 in DIA., 1.6 in DIA.) Extension rod (150 mm) 1 pc. Spanner 2 pcs. Hex wrench 1 pc.
368-919	2 - 4		Micrometer head unit 2 - 2.5 in 1 pc. 2.5 - 3 in 1 pc. 3 - 3.5 in 1 pc. 3.5 - 4 in 1 pc. Setting ring 1 pc. each (2.5 in DIA., 3.5 in DIA.) Extension rod (150 mm) 1 pc. Spanner 2 pcs. Hex wrench 1 pc.
368-920	4 - 8		Micrometer head unit 4 - 5 in 1 pc. 5 - 6 in 1 pc. 6 - 7 in 1 pc. 7 - 8 in 1 pc. Setting ring 1 pc. each (5 in DIA., 7 in DIA.) Extension rod (150 mm) 1 pc. Spanner 2 pcs. Hex wrench 1 pc.

* The measurement range cannot be enlarged by measuring heads that are not standard-supplied (the accuracy is not guaranteed).

Mitutoyo reserves the right to change any or all aspects of any product specification, including prices, designs and service content, without notice.

Mitutoyo

Holtest (Type II)
SERIES 368 — Three-point Internal Micrometers

- Holtests type II is equipped with contact points of alloy steel and has the same accuracy as the titanium model.
- For details of Setting Rings, refer to page C-52.
- Constant-force device allows stable measurement.
- Deep holes can be measured by attaching an Extension Rod (optional).


368-769


368-770


368-774

SPECIFICATIONS

Metric Individual

Order No.	Range*2 (mm)	Graduation (mm)	Maximum permissible error J_{MPE} (µm)*1	Extension Rod (optional)
368-764	12 - 16	0.005	±3 (maximum difference 3)	**952621** (150 mm)
368-765	16 - 20			
368-766	20 - 25			**952622** (150 mm)
368-767	25 - 30			
368-768	30 - 40			
368-769	40 - 50			
368-770	50 - 63			**952623** (150 mm)
368-771	62 - 75		±4 (maximum difference 4)	
368-772	75 - 88			
368-773	87 - 100			
368-774	100 - 125		±5 (maximum difference 5)	
368-775	125 - 150			
368-776	150 - 175			
368-777	175 - 200			
368-778	200 - 225		±6 (maximum difference 6)	
368-779	225 - 250			
368-780	250 - 275			
368-781	275 - 300			

Inch Individual

Order No.	Range*2 (in)	Graduation (in)	Maximum permissible error J_{MPE} (in)*1	Extension Rod (optional)
368-864	0.5 - 0.65	0.0002	±0.00015 (maximum difference 0.00015)	**952621** (150 mm)
368-865	0.65 - 0.8			
368-866	0.8 - 1			**952622** (150 mm)
368-867	1 - 1.2			
368-868	1.2 - 1.6			
368-869	1.6 - 2			
368-870	2 - 2.5			**952623** (150 mm)
368-871	2.5 - 3		±0.0002 (maximum difference 0.0002)	
368-872	3 - 3.5			
368-873	3.5 - 4			
368-874	4 - 5		±0.00025 (maximum difference 0.00025)	
368-875	5 - 6			
368-876	6 - 7			
368-877	7 - 8			
368-878	8 - 9		±0.0003 (maximum difference 0.0003)	
368-879	9 - 10			
368-880	10 - 11			
368-881	11 - 12			

*1 Additionally, the difference in permissible error allowable is limited to a value within this range, as given in parentheses, and is measured with the entire measuring surface in contact with the object measured.
*2 The measurement range cannot be enlarged by measuring heads that are not standard-supplied (the accuracy is not guaranteed).
Note: Setting rings are optional.

DIMENSIONS

Unit: mm

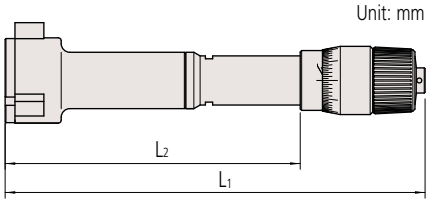

Range	L_2	L_1
12 - 16, 16 - 20	82	126 - 130
20 - 25, 25 - 30	94	137 - 142
30 - 40, 40 - 50	102	145 - 155
50 - 63, 62 - 75, 75 - 88, 87 - 100	105	150 - 163
100 - 125, 125 - 150, 150 - 175, 175 - 200 200 - 225, 225 - 250, 250 - 275, 275 - 300	161	227 - 252

Note: External appearance differs depending on the measuring range.

Measurement example



You can measure the diameter of a blind hole to the bottom.

Range (mm)	L_3 (mm)	L_5 (mm)
12 - 20	2.6 or below	3.5
20 - 30	3.4 or below	5.2
30 - 50		10.0
50 - 100		14.0
100 - 300	19.6 or below	13.8

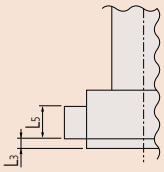

For details of Special-order Products, refer to page C-57.

Mitutoyo reserves the right to change any or all aspects of any product specification, including prices, designs and service content, without notice.

Non-Interchangeable-Head Sets



368-991



368-992



368-993



Setting rings are supplied as standard (ø125, ø175) (Packed separately)

368-994

C

Metric

Order No.	Range* (mm)	Graduation (mm)	Content of Set
368-991	12 - 20	0.005	Micrometer head unit 12 - 16 mm 1 pc. 16 - 20 mm 1 pc. Setting ring (ø16) 1 pc. Extension rod (150 mm) 1 pc. Spanner 2 pcs. Hex wrench 1 pc.
368-992	20 - 50		Micrometer head unit 20 - 25 mm 1 pc. 25 - 30 mm 1 pc. 30 - 40 mm 1 pc. 40 - 50 mm 1 pc. Setting ring (ø25, ø40) 1 pc. each Extension rod (150 mm) 1 pc. Spanner 2 pcs. Hex wrench 1 pc.
368-993	50 - 100		Micrometer head unit 50 - 63 mm 1 pc. 62 - 75 mm 1 pc. 75 - 88 mm 1 pc. 87 - 100 mm 1 pc. Setting ring (ø62, ø87) 1 pc. each Extension rod (150 mm) 1 pc. Spanner 2 pcs. Hex wrench 1 pc.
368-994	100 - 200		Micrometer head unit 100 - 125 mm 1 pc. 125 - 150 mm 1 pc. 150 - 175 mm 1 pc. 175 - 200 mm 1 pc. Setting ring (ø125, ø175) 1 pc. each Extension rod (150 mm) 1 pc. Spanner 2 pcs. Hex wrench 1 pc.

Inch

Order No.	Range* (in)	Graduation (in)	Content of Set
368-995	0.5 - 0.8	0.0002	Micrometer head unit 0.5 - 0.65 in 1 pc. 0.65 - 0.8 in 1 pc. Setting ring (0.65 in DIA.) 1 pc. Extension rod (150 mm) 1 pc. Spanner 2 pcs. Hex wrench 1 pc.
368-996	0.8 - 2		Micrometer head unit 0.8 - 1 in 1 pc. 1 - 1.2 in 1 pc. 1.2 - 1.6 in 1 pc. 1.6 - 2 in 1 pc. Setting ring 1 pc. each (1 in DIA., 1.6 in DIA.) Extension rod (150 mm) 1 pc. Spanner 2 pcs. Hex wrench 1 pc.
368-997	2 - 4		Micrometer head unit 2 - 2.5 in 1 pc. 2.5 - 3 in 1 pc. 3 - 3.5 in 1 pc. 3.5 - 4 in 1 pc. Setting ring 1 pc. each (2.5 in DIA., 3.5 in DIA.) Extension rod (150 mm) 1 pc. Spanner 2 pcs. Hex wrench 1 pc.
368-998	4 - 8		Micrometer head unit 4 - 5 in 1 pc. 5 - 6 in 1 pc. 6 - 7 in 1 pc. 7 - 8 in 1 pc. Setting ring 1 pc. each (5 in DIA., 7 in DIA.) Extension rod (150 mm) 1 pc. Spanner 2 pcs. Hex wrench 1 pc.

* The measurement range cannot be enlarged by measuring heads that are not standard-supplied (the accuracy is not guaranteed).

Mitutoyo reserves the right to change any or all aspects of any product specification, including prices, designs and service content, without notice.

MeasurLink® ENABLED
Data Management Software by Mitutoyo

PROPRIETARY INSPECTION CERTIFICATE

ABSOLUTE™

ABSOLUTE Borematic
SERIES 568 — ABSOLUTE Digimatic Snap-Open Bore Gages

- The Borematic allows quick and easy measurement with lever operation.
- Titanium-coated measuring pins provide excellent durability and impact resistance.
- Three-Point contact measuring head enables stable measurement.
- Deep holes can be measured by attaching an Extension Rod (optional).



568-364



568-368

DIMENSIONS

Unit: mm

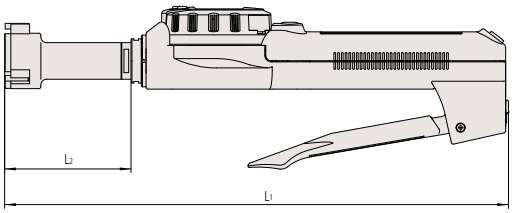

Range	L2	L1
6 - 8, 8 - 10, 10 - 12 mm	83	284
12 - 16, 16 - 20 mm	53	255
20 - 25, 25 - 30 mm	59	261
30 - 40, 40 - 50 mm	67	269
50 - 63, 62 - 75, 75 - 88, 87 - 100, 100 - 113, 112 - 125 mm	75	277

Note: External appearance differs depending on the measuring range.

Measurement example



You can measure the diameter of a blind hole to the bottom.

Range (mm)	L3 (mm)	L4 (mm)	L5 (mm)
6 - 12	2 or below	—	2.5
12 - 20	0.3 or below	5.6	3.5
20 - 30		8.3	5.2
30 - 50		13.0	10.0
50 - 125		17.0	14.0

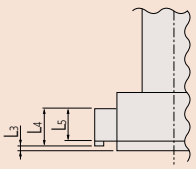

Functions

GO/NO-GO judgment
GO/NO-GO judgment zoom
2-Point Preset
Zero-setting
Data hold, Error alarm
Low battery voltage alert
Data output
Function Lock
330° rotary display
ON/OFF function
inch/mm conversion (inch/mm type)

Optional Accessories

Order No.	Type	description
905338	F	Connecting cable (1 m)
905409	F	Connecting cable (2 m)
06AFM380F	F	USB Input Tool Direct (2 m)
02AZD790F	F	Connecting cables for **U-WAVE-T** (160 mm)
02AZE140F	F	Connecting cables for **U-WAVE-T** For foot switch

For details of Special-order Products, refer to page C-57.

Mitutoyo reserves the right to change any or all aspects of any product specification, including prices, designs and service content, without notice.

SPECIFICATIONS

Metric Individual

Order No.	Range*2 (mm)	Resolution (mm)	Maximum permissible error J_{MPE} (µm)*1	Mass (g)	Extension Rod (optional)
568-361	6 - 8	0.001	±5 (maximum difference 5)	480	**952322** (100 mm)
568-362	8 - 10			485	
568-363	10 - 12			485	
568-364	12 - 16			475	**952621** (150 mm)
568-365	16 - 20			480	
568-366	20 - 25		±6 (maximum difference 6)	540	**952622** (150 mm)
568-367	25 - 30			555	
568-368	30 - 40			565	
568-369	40 - 50			610	
568-370	50 - 63			730	**952623** (150 mm)
568-371	62 - 75			740	
568-372	75 - 88			790	
568-373	87 - 100			800	
568-374	100 - 113			900	
568-375	112 - 125			910	

Inch / Metric Individual

Order No.	Range*2 (in)	Resolution	Maximum permissible error J_{MPE} (in)*1	Mass (g)	Extension Rod (optional)
568-461	0.275 - 0.35	0.00005 in / 0.001 mm	±0.00025 (maximum difference 0.00025)	480	**952322** (100 mm)
568-462	0.35 - 0.425			485	
568-463	0.425 - 0.5			485	
568-464	0.5 - 0.65			475	**952621** (150 mm)
568-465	0.65 - 0.8			480	
568-466	0.8 - 1		±0.0003 (maximum difference 0.0003)	540	**952622** (150 mm)
568-467	1 - 1.2			555	
568-468	1.2 - 1.6			565	
568-469	1.6 - 2			610	
568-470	2 - 2.5			730	**952623** (150 mm)
568-471	2.5 - 3			740	
568-472	3 - 3.5			790	
568-473	3.5 - 4			800	
568-474	4 - 4.5			900	
568-475	4.5 - 5			910	

- Response speed: Unlimited
- Battery: SR44 (1 pc.), **938882**, for initial operational checks (standard accessory)
- Scale type: Electrostatic capacitance type absolute encoder
- Battery life: Approx. 5,000 hours in continuous use

*1 Additionally, the difference in permissible error allowable is limited to a value within this range, as given in parentheses, and is measured with the entire measuring surface in contact with the object measured.

*2 The measurement range cannot be enlarged by measuring heads that are not standard-supplied (the accuracy is not guaranteed).

Note: Setting rings are optional.

C

MeasurLink® ENABLED
Data Management Software by Mitutoyo

ABSOLUTE Borematic
SERIES 568 — ABSOLUTE Digimatic Snap-Open Bore Gages

Interchangeable-Head Bore Gage Sets



568-924



568-926

Metric

Order No.	Range (mm)	Content of Set	
568-924	6 - 12	Display unit	1 pc.
		Measuring head	
		6 - 8 mm	1 pc.
		8 - 10 mm	1 pc.
		10 - 12 mm	1 pc.
		Attachment	1 pc.
		Setting ring (ø8, ø10)	1 pc. each
		Spanner	3 pcs.
568-925	12 - 25	Display unit	1 pc.
		Measuring head	
		12 - 16 mm	1 pc.
		16 - 20 mm	1 pc.
		20 - 25 mm	1 pc.
		Attachment	2 pcs.
		Setting ring (ø16, ø20)	1 pc. each
		Spanner	2 pcs.
568-926	25 - 50	Display unit	1 pc.
		Measuring head	
		25 - 30 mm	1 pc.
		30 - 40 mm	1 pc.
		40 - 50 mm	1 pc.
		Attachment	1 pc.
		Setting ring (ø30, ø40)	1 pc. each
		Spanner	2 pcs.
568-927	50 - 100	Display unit	1 pc.
		Measuring head	
		50 - 63 mm	1 pc.
		62 - 75 mm	1 pc.
		75 - 88 mm	1 pc.
		87 - 100 mm	1 pc.
		Attachment	1 pc.
		Setting ring (ø62, ø87)	1 pc. each
		Spanner	2 pcs.

Inch / Metric

Order No.	Range (in)	Content of Set	
568-928	0.275 - 0.5	Display unit	1 pc.
		Measuring head	
		0.275 - 0.35 in	1 pc.
		0.35 - 0.425 in	1 pc.
		0.425 - 0.5 in	1 pc.
		Attachment	1 pc.
		Setting ring (0.35 in DIA., 0.425 in DIA.)	1 pc. each
		Spanner	3 pcs.
568-929	0.5 - 1	Display unit	1 pc.
		Measuring head	
		0.5 - 0.65 in	1 pc.
		0.65 - 0.8 in	1 pc.
		0.8 - 1 in	1 pc.
		Attachment	2 pcs.
		Setting ring (0.65 in DIA., 0.8 in DIA.)	1 pc. each
		Spanner	2 pcs.
568-930	1 - 2	Display unit	1 pc.
		Measuring head	
		1 - 1.2 in	1 pc.
		1.2 - 1.6 in	1 pc.
		1.6 - 2 in	1 pc.
		Attachment	1 pc.
		Setting ring (1.2 in DIA., 1.6 in DIA.)	1 pc. each
		Spanner	2 pcs.
568-936	2 - 4	Display unit	1 pc.
		Measuring head	
		2 - 2.5 in	1 pc.
		2.5 - 3 in	1 pc.
		3 - 3.5 in	1 pc.
		3.5 - 4 in	1 pc.
		Attachment	1 pc.
		Setting ring (2.5 in DIA., 3.5 in DIA.)	1 pc. each
		Spanner	2 pcs.

Mitutoyo reserves the right to change any or all aspects of any product specification, including prices, designs and service content, without notice.

Non-Interchangeable-Head Snap-Open Bore Gage Sets

Each set includes complete gages (display units and measuring heads for each size).



568-955



568-957



568-959

C

Metric

Order No.	Range (mm)	Content of Set	
568-955	6 - 12	Display unit	
		6 - 8 mm	1 pc.
		8 - 10 mm	1 pc.
		10 - 12 mm	1 pc.
		Setting ring (ø8, ø10)	1 pc. each
		Spanner	3 pcs.
568-956	12 - 25	Display unit	
		12 - 16 mm	1 pc.
		16 - 20 mm	1 pc.
		20 - 25 mm	1 pc.
		Setting ring (ø16, ø20)	1 pc. each
		Spanner	2 pcs.
568-957	25 - 50	Display unit	
		25 - 30 mm	1 pc.
		30 - 40 mm	1 pc.
		40 - 50 mm	1 pc.
		Setting ring (ø30, ø40)	1 pc. each
		Spanner	2 pcs.
568-958	50 - 75	Display unit	
		50 - 63 mm	1 pc.
		62 - 75 mm	1 pc.
		Setting ring (ø62)	1 pc.
		Spanner	2 pcs.
568-959	75 - 100	Display unit	
		75 - 88 mm	1 pc.
		87 - 100 mm	1 pc.
		Setting ring (ø87)	1 pc.
		Spanner	2 pcs.

Inch / Metric

Order No.	Range (in)	Content of Set	
568-965	0.275 - 0.5	Display unit	
		0.275 - 0.35 in	1 pc.
		0.35 - 0.425 in	1 pc.
		0.425 - 0.5 in	1 pc.
		Setting ring (0.35 in DIA., 0.425 in DIA.)	1 pc. each
		Spanner	3 pcs.
568-966	0.5 - 1	Display unit	
		0.5 - 0.65 in	1 pc.
		0.65 - 0.8 in	1 pc.
		0.8 - 1 in	1 pc.
		Setting ring (0.65 in DIA., 0.8 in DIA.)	1 pc. each
		Spanner	2 pcs.
568-967	1 - 2	Display unit	
		1 - 1.2 in	1 pc.
		1.2 - 1.6 in	1 pc.
		1.6 - 2 in	1 pc.
		Setting ring (1.2 in DIA., 1.6 in DIA.)	1 pc. each
		Spanner	2 pcs.
568-968	2 - 3	Display unit	
		2 - 2.5 in	1 pc.
		2.5 - 3 in	1 pc.
		Setting ring (2.5 in DIA.)	1 pc.
		Spanner	2 pcs.
568-969	3 - 4	Display unit	
		3 - 3.5 in	1 pc.
		3.5 - 4 in	1 pc.
		Setting ring (3.5 in DIA.)	1 pc.
		Spanner	2 pcs.

Mitutoyo reserves the right to change any or all aspects of any product specification, including prices, designs and service content, without notice.

Mitutoyo

Tubular Inside Micrometers
SERIES 133 — Single-Rod Type

- Standard Single-Rod Type inside micrometer.
- Carbide measuring faces.
- The sleeve is rotated to adjust the reference point adjustment when setting to a length standard.
- Optional Setting Rings (nominal size below 300 mm), CERA Inside Micro Checker and Gauge Block Accessory Sets are available as reference gages datum adjustment. (Refer to pages C-28, C-52, and E-17 to E-20 for details)

Measurement example





133-143

SPECIFICATIONS

Metric Individual

Order No.	Range (mm)	Graduation (mm)	Maximum permissible error J_{MPE} (µm)
133-143	50 - 75	0.01	±3

Inch Individual

Order No.	Range (in)	Graduation (in)	Maximum permissible error J_{MPE} (in)
133-223	2 - 3	0.001	±0.00015

DIMENSIONS

133-143 Unit: mm

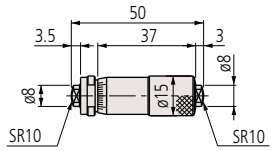



133-144

SPECIFICATIONS

Metric Individual

Order No.	Range (mm)	Graduation (mm)	Maximum permissible error J_{MPE} (µm)
133-144	75 - 100	0.01	±4

Inch Individual

Order No.	Range (in)	Graduation (in)	Maximum permissible error J_{MPE} (in)
133-224	3 - 4	0.001	±0.0002

DIMENSIONS

133-144 Unit: mm

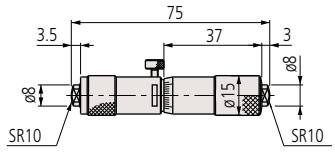

Mitutoyo reserves the right to change any or all aspects of any product specification, including prices, designs and service content, without notice.

Micrometer Set



133-902

133-901 (Metric)
- Range: 50 - 150 mm (4 heads/set)
- Models included:
  133-143 133-144
  133-145 133-146
  with fitted case

133-902 (Metric)
- Range: 50 - 300 mm (10 heads/set)
- Models included:
  133-143 133-144
  133-145 133-146
  133-147 133-148
  133-149 133-150
  133-151 133-152
  with fitted case

133-903 (Inch)
- Range: 2 - 6 in (4 heads/set)
- Models included:
  133-223 133-224
  133-225 133-226
  with fitted case

133-904 (Inch)
- Range: 2 - 12 in (10 heads/set)
- Models included:
  133-223 133-224
  133-225 133-226
  133-227 133-228
  133-229 133-230
  133-231 133-232
  with fitted case



133-152

SPECIFICATIONS

Metric Individual

Order No.	Range (mm)	Graduation (mm)	Maximum permissible error J_{MPE} (µm)
133-145	100 - 125	0.01	±5
133-146	125 - 150		
133-147	150 - 175		
133-148	175 - 200		
133-149	200 - 225		
133-150	225 - 250		±6
133-151	250 - 275		
133-152	275 - 300		
133-153	300 - 325		±7
133-154	325 - 350		
133-155	350 - 375		
133-156	375 - 400		±8
133-157	400 - 425		
133-158	425 - 450		
133-159	450 - 475		±9
133-160	475 - 500		
133-161	500 - 525		
133-162	525 - 550		±10
133-163	550 - 575		
133-164	575 - 600		
133-165	600 - 625		±11
133-166	625 - 650		
133-167	650 - 675		
133-168	675 - 700		±12
133-169	700 - 725		
133-170	725 - 750		
133-171	750 - 775		±13
133-172	775 - 800		
133-173	800 - 825		
133-174	825 - 850		±14
133-175	850 - 875		
133-176	875 - 900		
133-177	900 - 925		±15
133-178	925 - 950		
133-179	950 - 975		
133-180	975 - 1000		±16

Inch Individual

Order No.	Range (in)	Graduation (in)	Maximum permissible error J_{MPE} (in)
133-225	4 - 5	0.001	±0.00025
133-226	5 - 6		
133-227	6 - 7		
133-228	7 - 8		
133-229	8 - 9		
133-230	9 - 10		±0.0003
133-231	10 - 11		
133-232	11 - 12		

DIMENSIONS

133-145 to 133-180

Unit: mm

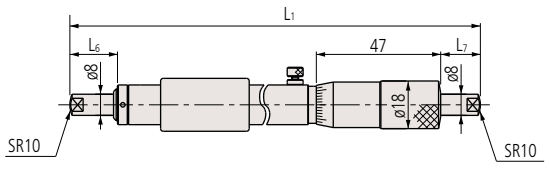

Order No.	L1	L6	L7
133-145	100	5	3
133-146	125	5	3
133-147	150	18	15
133-148	175	18	15
133-149	200	18	15
⋮	⋮	⋮	⋮
133-180	975	18	15

C

Tubular Inside Micrometers
SERIES 137, 337 — Extension-Rod Type

- Wide range of inside measurements possible by combining Extension Rods and anvils with the micrometer head.
- Two types of measuring faces are available; with or without carbide tip. (The **337** Series is only available with carbide tip)
- The sleeve is rotated to adjust the reference point adjustment when setting to a length standard.
- An inside length standard is required for accurately setting the micrometer.



337-301

SPECIFICATIONS

Metric

Order No.	Range (mm)	Resolution (mm)	Spindle feed error* (µm)	Micrometer head stroke (mm)	Extension rods		Display unit (mm)
					Qty	Size (mm)	
337-101	200 - 225	0.001	3	25	—	—	200 - 225
337-301	200 - 1000				6	25, 50, 100 (2 pcs.), 200, 300	
337-302	200 - 1500				7	25, 50, 100, 200, 300 (3 pcs.)	

Inch / Metric

Order No.	Range (in)	Resolution	Spindle feed error* (in)	Micrometer head stroke (in)	Extension rods		Display unit (in)
					Qty	Size (in)	
337-102	8 - 9	0.0001 in/ 0.001 mm	0.00015	1	—	—	8 - 9
337-303	8 - 40				6	1, 2, 4 (2 pcs.), 8, 12	
337-304	8 - 60				7	1, 2, 4, 8, 12 (3 pcs.)	

- Battery and Scale Type: SR44 (1 pc.), **938882**, for initial operational checks (standard accessory)
- Battery life: Approx. 1.2 years under normal use
- Scale type: Electromagnetic induction-type rotary encoder

* "Spindle feed error" refers to the difference between the maximum and minimum indication error values within the measuring range of the micrometer head

MeasurLink® ENABLED
Data Management Software by Mitutoyo

IP65

Dust- and Water-Protected
TÜVRheinland CERTIFIED
www.tuv.com ID 0000021605

Applicable models:
SERIES **337**

Measurement example



Functions

Zero-setting
Origin restoration
Data hold
2-point Preset
Function lock
Automatic power ON/OFF
Error alarm
Data output

Optional Accessories

Order No.	Type	description
05CZA662	B	Connecting cable (1 m)
05CZA663	B	Connecting cable (2 m)
06AFM380B	B	USB Input Tool Direct (2 m)
02AZD790B	B	Connecting cables for **U-WAVE-T** (160 mm)
02AZE140B	B	Connecting cables for **U-WAVE-T** For foot switch

Mitutoyo reserves the right to change any or all aspects of any product specification, including prices, designs and service content, without notice.

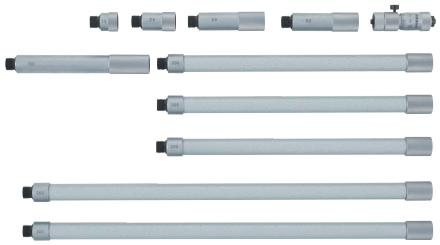

137-205

SPECIFICATIONS

Metric

Order No.	Range (mm)	Graduation (mm)	Spindle feed error* (µm)	Micrometer head stroke (mm)	Extension rods Qty	Extension rods Size (mm)	Main unit (mm)
137-201	50 - 150	0.01	3	13	3	13, 25, 50	50 - 63
137-202	50 - 300				5	13, 25, 50 (2 pcs.), 100	
137-203	50 - 500				6	13, 25, 50 (2 pcs.), 100, 200	
137-204	50 - 1000				8	13, 25, 50 (2 pcs.), 100, 200 (2 pcs.), 300	
137-205	50 - 1500				10	13, 25, 50 (2 pcs.), 100, 200 (3 pcs.), 300 (2 pcs.)	
With carbide measuring face							
137-206	50 - 150	0.01	3	13	3	13, 25, 50	50 - 63
137-207	50 - 300				5	13, 25, 50 (2 pcs.), 100	
137-208	50 - 500				6	13, 25, 50 (2 pcs.), 100, 200	
137-209	50 - 1000				8	13, 25, 50 (2 pcs.), 100, 200 (2 pcs.), 300	
137-210	50 - 1500				10	13, 25, 50 (2 pcs.), 100, 200 (3 pcs.), 300 (2 pcs.)	

Inch

Order No.	Range (in)	Graduation (in)	Spindle feed error* (in)	Micrometer head stroke (in)	Extension rods Qty	Extension rods Size (in)	Main unit (in)
137-211	2 - 6	0.001	0.00015	0.5	3	0.5, 1, 2	2 - 2.5
137-212	2 - 12				5	0.5, 1, 2 (2 pcs.), 4	
137-213	2 - 20				6	0.5, 1, 2 (2 pcs.), 4, 8	
137-214	2 - 40				8	0.5, 1, 2 (2 pcs.), 4, 8 (2 pcs.), 12	
137-215	2 - 60				10	0.5, 1, 2 (2 pcs.), 4, 8 (3 pcs.), 12 (2 pcs.)	
With carbide measuring face							
137-216	2 - 6	0.001	0.00015	0.5	3	0.5, 1, 2	2 - 2.5
137-217	2 - 12				5	0.5, 1, 2 (2 pcs.), 4	
137-218	2 - 20				6	0.5, 1, 2 (2 pcs.), 4, 8	
137-219	2 - 40				8	0.5, 1, 2 (2 pcs.), 4, 8 (2 pcs.), 12	
137-220	2 - 60				10	0.5, 1, 2 (2 pcs.), 4, 8 (3 pcs.), 12 (2 pcs.)	

* "Spindle feed error" refers to the difference between the maximum and minimum indication error values within the measuring range of the micrometer head

DIMENSIONS

137-205 Unit: mm

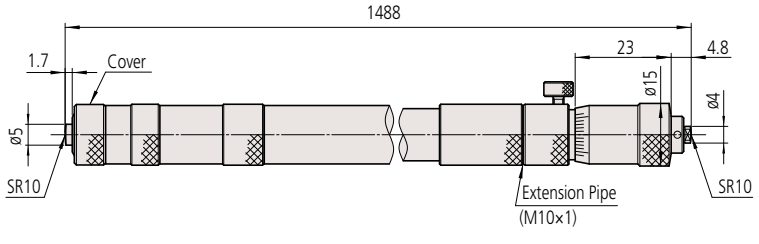

Mitutoyo reserves the right to change any or all aspects of any product specification, including prices, designs and service content, without notice.

Tubular Inside Micrometers
SERIES 137 — Extension-Rod Type (main unit)

- Micrometer head for Extension-Rod Type inside micrometer.
- The sleeve is rotated to adjust the reference point adjustment when setting to a length standard.
- Optional Setting Rings and Gauge Block Accessory Sets are available as reference gages for datum adjustment. (Refer to pages C-52 and E-17 to E-20 for details)



137-011

SPECIFICATIONS

Metric

Order No.	Range (mm)	Spindle feed error* (µm)	Graduation (mm)	Micrometer head stroke (mm)
137-011 Carbide-tipped **137-013**	50 - 63	3	0.01	13

Inch

Order No.	Range (in)	Spindle feed error* (in)	Graduation (in)	Micrometer head stroke (in)
137-012 Carbide-tipped **137-014**	2 - 2.5	0.00015	0.001	0.5

* "Spindle feed error" refers to the difference between the maximum and minimum indication error values within the specification range of the micrometer head

DIMENSIONS

137-011 Unit: mm

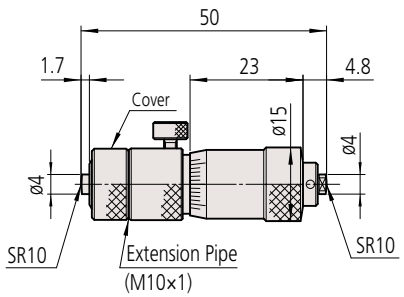

Mitutoyo reserves the right to change any or all aspects of any product specification, including prices, designs and service content, without notice.

MeasurLink® ENABLED
Data Management Software by Mitutoyo

IP65

Dust- and Water-Protected
TÜVRheinland CERTIFIED
www.tuv.com ID 0000021605

Measurement example



Functions

Zero-setting
Origin restoration
Data hold
Function lock
Automatic power ON/OFF
2-point Preset
Error alarm
Data output

Optional Accessories

Order No.	Type	description
05CZA662	B	Connecting cable (1 m)
05CZA663	B	Connecting cable (2 m)
06AFM380B	B	USB Input Tool Direct (2 m)
02AZD790B	B	Connecting cables for **U-WAVE-T** (160 mm)
02AZE140B	B	Connecting cables for **U-WAVE-T** For foot switch

Tubular Inside Micrometers
SERIES 339 — Extension-Pipe Type

- Wide range of inside measurements possible by combining Extension Pipes and anvils with the micrometer head.
- The sleeve is rotated to adjust the reference point adjustment when setting to a length standard.
- An inside length standard is required for accurately setting the micrometer.
- IP65 (water-proof) protection level that enables use in the presence of cutting fluid.

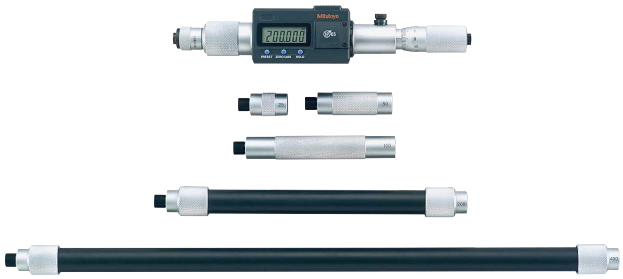

339-301

SPECIFICATIONS

Metric

Order No.	Range (mm)	Resolution (mm)	Spindle feed error* (µm)	Micrometer head stroke (mm)	Extension pipes		Display unit (mm)
					Qty	Size (mm)	
339-101	200 - 225	0.001	3	25	—	—	200 - 225
339-301	200 - 1000				5	25, 50, 100, 200, 400	
339-302	200 - 2000				8	25, 50, 100, 200 (2 pcs.), 400 (3 pcs.)	

Inch/Metric

Order No.	Range (in)	Resolution	Spindle feed error* (in)	Micrometer head stroke (in)	Extension pipes		Display unit (in)
					Qty	Size (in)	
339-102	8 - 9	0.0001 in/ 0.001 mm	0.00015	1		—	8 - 9
339-303	8 - 40				5	1, 2, 4, 8, 16	
339-304	8 - 80				8	1, 2, 4, 8 (2 pcs.), 16 (3 pcs.)	

- Battery and Scale Type: SR44 (1 pc.), **938882**, for initial operational checks (standard accessory)
- Battery life: Approx. 1.2 years under normal use
- Scale type: Electromagnetic induction-type rotary encoder

* "Spindle feed error" refers to the difference between the maximum and minimum indication error values within the measuring range of the micrometer head

C

Mitutoyo reserves the right to change any or all aspects of any product specification, including prices, designs and service content, without notice.

Mitutoyo

MeasurLink® ENABLED
Data Management Software by Mitutoyo

Tubular Inside Micrometers
SERIES 139, 140 — Extension-Pipe Type

- Wide range of inside measurements possible by combining Extension Pipes and anvils with the micrometer head.
- The sleeve is rotated to adjust the reference point adjustment when setting to a length standard.
- An inside length standard is required for accurately setting the micrometer.



139-177

DIMENSIONS

139-177 Unit: mm

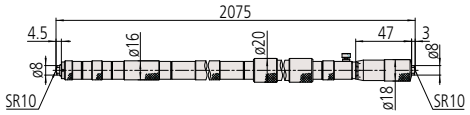

SPECIFICATIONS

Metric

Order No.	Range (mm)	Graduation (mm)	Spindle feed error* (µm)	Micrometer head stroke (mm)	Extension pipes Qty	Extension pipes Size (mm)	Main unit (mm)
139-173	100 - 500	0.01	3	25	4	25, 50, 100, 200	100 - 125
139-174	100 - 900				5	25, 50, 100, 200, 400	
139-175	100 - 1300				6	25, 50, 100, 200, 400 (2 pcs.)	
139-176	100 - 1700				7	25, 50, 100, 200, 400 (3 pcs.)	
139-177	100 - 2100				8	25, 50, 100, 200, 400 (4 pcs.)	

Inch

Order No.	Range (in)	Graduation (in)	Spindle feed error* (in)	Micrometer head stroke (in)	Extension pipes Qty	Extension pipes Size (in)	Main unit (in)
139-178	4 - 20	0.001	0.00015	1	4	1, 2, 4, 8	4 - 5
139-179	4 - 36				5	1, 2, 4, 8, 16	
139-180	4 - 52				6	1, 2, 4, 8, 16 (2 pcs.)	
139-181	4 - 68				7	1, 2, 4, 8, 16 (3 pcs.)	
139-182	4 - 84				8	1, 2, 4, 8, 16 (4 pcs.)	

* "Spindle feed error" refers to the difference between the maximum and minimum indication error values within the measuring range of the micrometer head

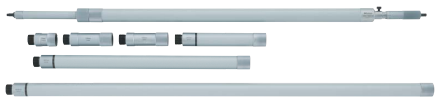

140-158

DIMENSIONS

140-158 Unit: mm

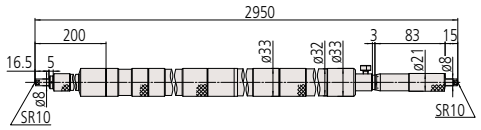

SPECIFICATIONS

Metric

Order No.	Range (mm)	Graduation (mm)	Spindle feed error* (µm)	Micrometer head stroke (mm)	Extension pipes Qty	Extension pipes Size (mm)	Main unit (mm)
140-157	1000 - 2000	0.01	6	50	5	50, 100 (2 pcs.), 200, 500	1000 - 1050
140-158	1000 - 3000				6	50, 100 (2 pcs.), 200, 500, 1000	
140-159	1000 - 4000				7	50, 100 (2 pcs.), 200, 500, 1000 (2 pcs.)	
140-160	1000 - 5000				8	50, 100 (2 pcs.), 200, 500, 1000 (3 pcs.)	

Inch

Order No.	Range (in)	Graduation (in)	Spindle feed error* (in)	Micrometer head stroke (in)	Extension pipes Qty	Extension pipes Size (in)	Main unit (in)
140-161	40 - 80	0.001	0.0003	2	5	2, 4 (2 pcs.), 8, 20	40 - 42
140-162	40 - 120				6	2, 4 (2 pcs.), 8, 20, 40	
140-163	40 - 160				7	2, 4 (2 pcs.), 8, 20, 40 (2 pcs.)	
140-164	40 - 200				8	2, 4 (2 pcs.), 8, 20, 40 (3 pcs.)	

* "Spindle feed error" refers to the difference between the maximum and minimum indication error values within the measuring range of the micrometer head

Mitutoyo reserves the right to change any or all aspects of any product specification, including prices, designs and service content, without notice.

Tubular Inside Micrometers
SERIES 139 — Extension-Pipe Type (main unit)

- Micrometer head for Extension-Pipe Type inside micrometer.
- The sleeve is rotated to adjust the reference point adjustment when setting to a length standard.
- Optional Setting Rings, CERA Inside Micro Checker and Gauge Block Accessory Sets are available as reference gages for datum adjustment. (Refer to pages C-28, C-52, and E-17 to E-20 for details)



139-001

SPECIFICATIONS

Metric

Order No.	Range (mm)	Spindle feed error* (µm)	Graduation (mm)	Micrometer head stroke (mm)
139-001	100 - 125	3	0.01	25

Inch

Order No.	Range (in)	Spindle feed error* (in)	Graduation (in)	Micrometer head stroke (in)
139-002	4 - 5	0.00015	0.001	1

* "Spindle feed error" refers to the difference between the maximum and minimum indication error values within the specification range of the micrometer head

DIMENSIONS

139-001 Unit: mm

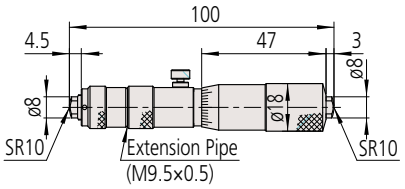

C

Mitutoyo reserves the right to change any or all aspects of any product specification, including prices, designs and service content, without notice.

MeasurLink® ENABLED
Data Management Software by Mitutoyo

Inside Micrometers
SERIES 345 — Caliper Type

- Carbide measuring faces.
- Equipped with a constant measuring-force device.
- Optional Setting Rings (nominal size below 300 mm), CERA Inside Micro Checker (more than 25 mm) and Gauge Block Accessory Sets are available as reference gages for datum adjustment. (Refer to pages C-28, C-52, and E-17 to E-20 for details)



345-250-30

Measurement example



Optional Accessories

Order No.	Type	description
05CZA662	B	Connecting cable (1 m)
05CZA663	B	Connecting cable (2 m)
06AFM380B	B	USB Input Tool Direct (2 m)
02AZD790B	B	Connecting cables for **U-WAVE-T** (160 mm)
02AZE140B	B	Connecting cables for **U-WAVE-T** For foot switch

SPECIFICATIONS

Metric

Order No.	Range (mm)	Resolution (mm)	Maximum permissible error J_{MPE} (µm)	Jaw	Mass (g)
345-250-30	5 - 30	0.001	±5	Pin	320
345-251-30	25 - 50		±6	Anvil	325

Inch / Metric

Order No.	Range (in)	Resolution	Maximum permissible error J_{MPE} (in)	Jaw	Mass (g)
345-350-30	0.2 - 1.2	0.00005 in/ 0.001 mm	±0.00025	Pin	320
345-351-30	1 - 2		±0.0003	Anvil	325

- Battery and Scale Type: SR44 (1 pc.), **938882**, for initial operational checks (standard accessory)
- Battery life: Approx. 2.4 years under normal use
- Scale type: Electromagnetic induction-type rotary encoder

Note 1: For the functions, refer to **293** Series with SPC data output on page B-7.
This model is NOT water-proof. Also, the origin setting is the free preset type.
Note 2: The minimum pitch circle measurement is ø5 mm with pin type (**345-250-30**, **345-350-30**).

DIMENSIONS

345-250-30

Unit: mm

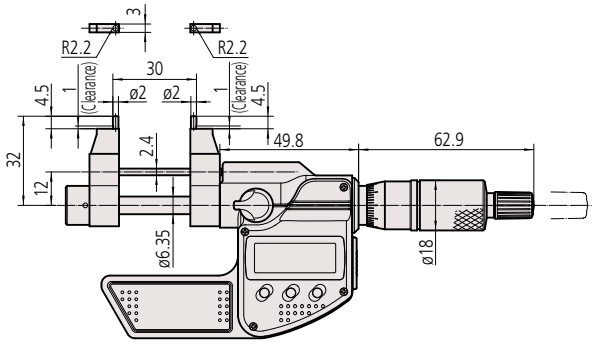

345-251-30

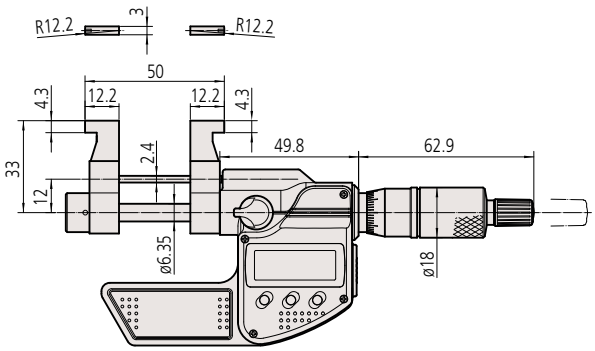

Mitutoyo reserves the right to change any or all aspects of any product specification, including prices, designs and service content, without notice.

Inside Micrometers
SERIES 145 — Caliper Type

- Carbide measuring faces.
- Equipped with a constant measuring-force device.
- Optional Setting Rings (nominal size below 300 mm), CERA Inside Micro Checker (more than 25 mm) and Gauge Block Accessory Sets are available as reference gages for datum adjustment. (Refer to pages C-28, C-52, and E-17 to E-20 for details)

Accessories for 145-185 / 186 / 193 / 194 (optional)

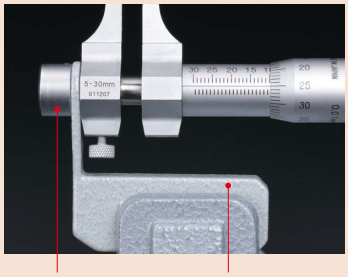

Cap (**300401**) Holder (**300400**)

Note 1: This instrument requires the cap and the holder for mounting on a micrometer stand.
Note 2: It may not be applicable to a custom specification.



145-185

DIMENSIONS

Unit: mm

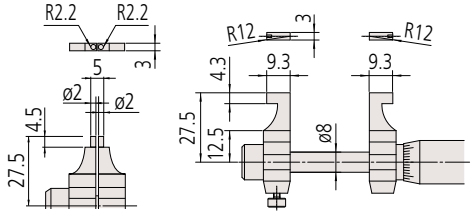

145-185 **145-186**

SPECIFICATIONS

Metric

Order No.	Range (mm)	Graduation (mm)	Maximum permissible error J_{MPE} (µm)	Jaw	Mass (g)
145-185	5 - 30	0.01	±5	Pin	130
145-186	25 - 50		±6	Anvil	140

Inch

Order No.	Range (in)	Graduation (in)	Maximum permissible error J_{MPE} (in)	Jaw	Mass (g)
145-193	0.2 - 1.2	0.001	±0.00025	Pin	130
145-194	1 - 2		±0.0003	Anvil	140

Note: The minimum pitch circle measurement is ø5 mm with pin type (**145-185**, **145-193**).



145-187

DIMENSIONS

145-187 to 145-220 Unit: mm

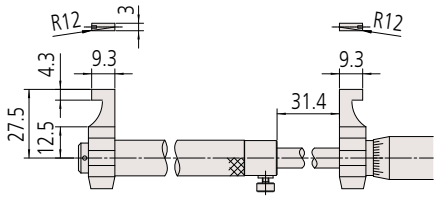

SPECIFICATIONS

Metric

Order No.	Range (mm)	Graduation (mm)	Maximum permissible error J_{MPE} (µm)	Jaw	Mass (g)
145-187	50 - 75	0.01	±7	Anvil	160
145-188	75 - 100		±8	Anvil	180
145-189	100 - 125		±9	Anvil	210
145-190	125 - 150			Anvil	230
145-191	150 - 175		±10	Anvil	250
145-192	175 - 200			Anvil	270
145-217	200 - 225		±11	Anvil	310
145-218	225 - 250			Anvil	330
145-219	250 - 275		±12	Anvil	350
145-220	275 - 300			Anvil	370

Inch

Order No.	Range (in)	Graduation (in)	Maximum permissible error J_{MPE} (in)	Jaw	Mass (g)
145-195	2 - 3	0.001	±0.00035	Anvil	160
145-196	3 - 4		±0.0004	Anvil	180

Mitutoyo reserves the right to change any or all aspects of any product specification, including prices, designs and service content, without notice.

Inside Micrometers
SERIES 141 — Interchangeable-Rod Type

- Wide range of inside measurements possible by combining one or more Interchangeable Rods.
- For models supplied with more than one Interchangeable Rod, the full measuring range is achieved by combining spacing collars with the rods.



141-101

When using one of the extension rods supplied (Measuring range 25 to 32 mm)

Measurement example



C

SPECIFICATIONS

Metric

Order No.	Range (mm)	Spindle feed error*2 (µm)	Graduation (mm)	Micrometer head stroke (mm)	Remarks
141-101 / 141-103*1	25 - 50	3	0.01	7	with 2 rods
141-205 / 141-211*1	50 - 200			13	with 3 rods
141-206 / 141-212*1	50 - 300				with 5 rods
141-117	200 - 500			25	with 3 rods
141-118	200 - 1000				with 8 rods

Inch

Order No.	Range (in)	Spindle feed error*2 (in)	Graduation (in)	Micrometer head stroke (in)	Remarks
141-102 / 141-104*1	1 - 2	0.00015	0.001	0.25	with 2 rods
141-208 / 141-214*1	2 - 8			0.5	with 3 rods
141-233 / 141-215*1	2 - 12				with 5 rods
141-121	8 - 20			1	with 3 rods
141-122	8 - 40				with 8 rods

*1 With carbide measuring face
*2 "Spindle feed error" refers to the difference between the maximum and minimum indication error values within the specification range of the micrometer head

Metric Micrometer head only model

Order No.	Range (mm)	Spindle feed error*2 (µm)	Graduation (mm)	Micrometer head stroke (mm)
141-001 / 141-003*1	25 - 32	3	0.01	7
141-025 / 141-027*1	50 - 63			13
141-009 / 141-011*1	200 - 225			25

Inch Micrometer head only model

Order No.	Range (in)	Spindle feed error*2 (in)	Graduation (in)	Micrometer head stroke (in)
141-002 / 141-004*1	1 - 1.25	0.00015	0.001	0.25
141-026 / 141-028*1	2 - 2.5			0.5
141-010 / 141-012*1	8 - 9			1

*1 With carbide measuring face
*2 "Spindle feed error" refers to the difference between the maximum and minimum indication error values within the specification range of the micrometer head

DIMENSIONS

141-101

Unit: mm

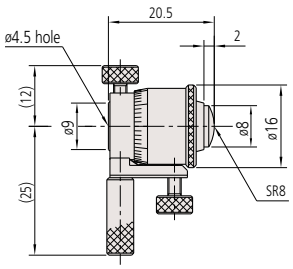

Mitutoyo reserves the right to change any or all aspects of any product specification, including prices, designs and service content, without notice.

CERA Inside Micro Checker SERIES 515

- The Inside Micro Checker is designed to act as a setting standard for inside micrometers.
- Applicable for SERIES **133**, **139** and **145** (over 50 mm). Not applicable for SERIES **137**, **141**, **337** and **339**.



515-585

Measurement example

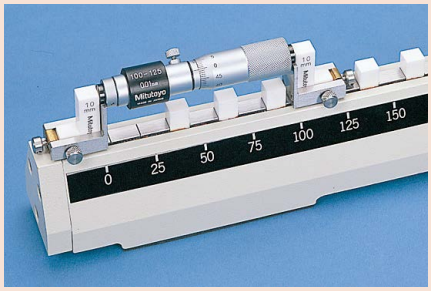

Standard accessory set

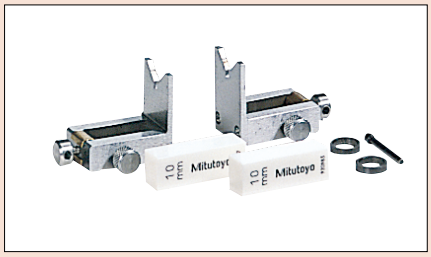

Support clamps	**940286***	Pair
Auxiliary block 10 mm		2 pcs.
Collar	**602195**	2 pcs.
Clamp screwdriver	**600324**	1 pc.

* Order No. is equivalent to a pair (2 pcs.)

Wooden box (optional)

602160 (for **515-585**)
602163 (for **515-586**)

SPECIFICATIONS

Order No.	Length to check (mm)	Block pitch accuracy
515-585	25 - 300	±(1 + L/150) µm L: Length to check (mm)
515-586	25 - 600	

Note: Please note that the bottom surface and the contact faces are not precisely perpendicular to each other.

DIMENSIONS

Unit: mm

515-585

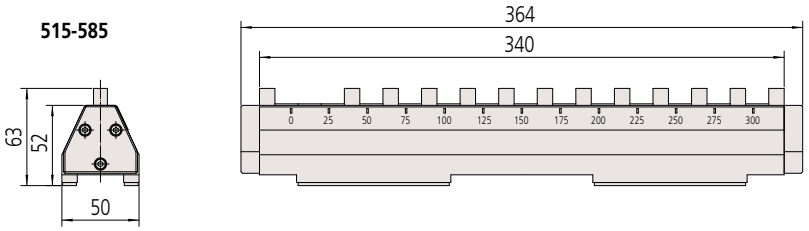

515-586

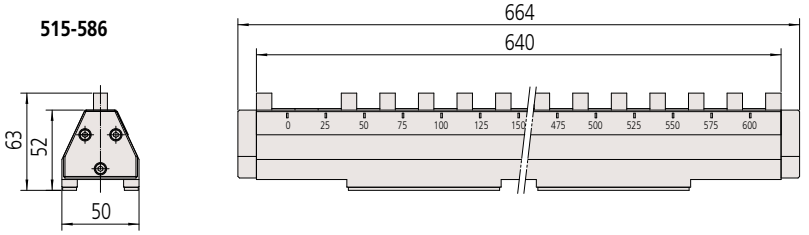

Mitutoyo reserves the right to change any or all aspects of any product specification, including prices, designs and service content, without notice.

Bore Gages
SERIES 526 — for Extra Small Holes

- This series allows for agile and highly accurate comparative measurement of ø1 to 7 mm inside diameters.
- We offer an array of indicators. Contact us if you prefer any indicator other than the standard recommended indicator.
- Optional stand (**215-120-10**) is available for efficient measurement of multiple small holes.





526-170-11

Note: The dial indicator and the dial protection cover are optional.

SPECIFICATIONS

Metric

Order No.	Range (mm)	Accuracy* (µm)	Repeatability* (µm)	Bore gage	Dial indicator	Dial protection cover	Setting ring
526-170-10	0.95 - 1.55	4	1	526-170-10	Not supplied	Not supplied	Not supplied
526-160-10	1.50 - 3.95	4		526-160-10			
526-150-10	3.70 - 7.30	6		526-150-10			
526-172-20	0.95 - 1.55	4		526-170-10	**2109AB-10** (Graduation: 0.001 mm)	21DZA000	
526-162-20	1.50 - 3.95	4		526-160-10			
526-152-20	3.70 - 7.30	6		526-150-10			
526-173-20	0.95 - 1.55	4		526-170-10	**2046AB** (Graduation: 0.01 mm)	21DZA000	
526-163-20	1.50 - 3.95	4		526-160-10			
526-153-20	3.70 - 7.30	6		526-150-10			
526-170-11	0.95 - 1.55	4		526-170-10	Not supplied	Not supplied	Supplied
526-160-11	1.50 - 3.95	4		526-160-10			
526-150-11	3.70 - 7.30	6		526-150-10			
526-172-21	0.95 - 1.55	4		526-170-10	**2109AB-10** (Graduation: 0.001 mm)	21DZA000	
526-162-21	1.50 - 3.95	4		526-160-10			
526-152-21	3.70 - 7.30	6		526-150-10			
526-173-21	0.95 - 1.55	4		526-170-10	**2046AB** (Graduation: 0.01 mm)	21DZA000	
526-163-21	1.50 - 3.95	4		526-160-10			
526-153-21	3.70 - 7.30	6		526-150-10			

Inch

Order No.	Range (in)	Accuracy* (in)	Repeatability* (in)	Bore gage	Dial indicator	Dial protection cover	Setting ring
526-175-10	0.037 - 0.061	0.00016	0.00004	526-175-10	Not supplied	Not supplied	Not supplied
526-165-10	0.059 - 0.156	0.00016		526-165-10			
526-155-10	0.146 - 0.287	0.00024		526-155-10			
526-176-20	0.037 - 0.061	0.00016		526-175-10	**2923AB-10** (Graduation: 0.0001 in)	21DZA000	
526-166-20	0.059 - 0.156	0.00016		526-165-10			
526-156-20	0.146 - 0.287	0.00024		526-155-10			
526-175-11	0.037 - 0.061	0.00016		526-175-10	Not supplied	Not supplied	Supplied
526-165-11	0.059 - 0.156	0.00016		526-165-10			
526-155-11	0.146 - 0.287	0.00024		526-155-10			
526-176-21	0.037 - 0.061	0.00016		526-175-10	**2923AB-10** (Graduation: 0.0001 in)	21DZA000	
526-166-21	0.059 - 0.156	0.00016		526-165-10			
526-156-21	0.146 - 0.287	0.00024		526-155-10			

* Accuracy of the bore gage alone.

Note: Setting rings are not supplied with some models. Please purchase them separately if necessary. For details of setting rings, refer to page C-52.

Measurement example



Measurement Principle

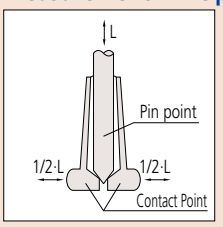

Setting Rings (Metric)

Nominal size

- **Order No. 526-170-11 etc.**
  - **177-220**: 1.0 mm
  - **177-222**: 1.1 mm
  - **177-225**: 1.2 mm
  - **177-227**: 1.3 mm
  - **177-230**: 1.4 mm
- **Order No. 526-160-11 etc.**
  - **177-236**: 1.75 mm
  - **177-239**: 2.00 mm
  - **177-242**: 2.25 mm
  - **177-208**: 2.50 mm
  - **177-246**: 2.75 mm
  - **177-248**: 3.00 mm
  - **177-250**: 3.25 mm
  - **177-252**: 3.50 mm
  - **177-255**: 3.75 mm
- **Order No. 526-150-11 etc.**
  - **177-204**: 4.0 mm
  - **177-257**: 4.5 mm
  - **177-205**: 5.0 mm
  - **177-263**: 5.5 mm
  - **177-267**: 6.0 mm
  - **177-271**: 6.5 mm
  - **177-275**: 7.0 mm

Setting Rings (Inch)

Nominal size

- **Order No. 526-175-11 etc.**
  - **177-350**: 0.040 in
  - **177-351**: 0.045 in
  - **177-352**: 0.050 in
  - **177-353**: 0.055 in
  - **177-354**: 0.060 in
- **Order No. 526-165-11 etc.**
  - **177-355**: 0.07 in
  - **177-356**: 0.08 in
  - **177-357**: 0.09 in
  - **177-358**: 0.10 in
  - **177-359**: 0.11 in
  - **177-360**: 0.12 in
  - **177-361**: 0.13 in
  - **177-362**: 0.14 in
  - **177-363**: 0.15 in
- **Order No. 526-155-11 etc.**
  - **177-364**: 0.16 in
  - **177-365**: 0.18 in
  - **177-366**: 0.20 in
  - **177-367**: 0.22 in
  - **177-368**: 0.24 in
  - **177-369**: 0.26 in
  - **177-370**: 0.28 in

Mitutoyo reserves the right to change any or all aspects of any product specification, including prices, designs and service content, without notice.

The dial protection cover, recommended indicators

Refer to page C-50.

DIMENSIONS

Unit: mm

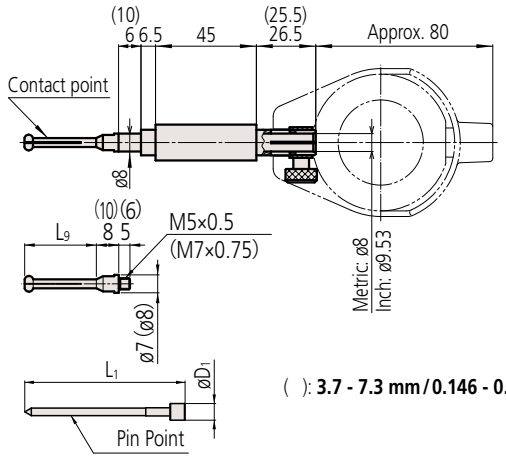

( ): **3.7 - 7.3 mm / 0.146 - 0.287 in range model**

Bore gage (Main body)	Contact point				Pin point		
	Marked No.	**Order No.**	Range	L_9	L_1	$øD_1$	**Order No.**
526-170-10 **526-175-10**	1.0	**21DAA601A**	0.95 - 1.15 mm/0.037 - 0.045 in	11.5	27.5	2.5	**201435**
	1.1	**21DAA601B**	1.07 - 1.25 mm/0.042 - 0.049 in				
	1.2	**21DAA601C**	1.17 - 1.35 mm/0.046 - 0.053 in				
	1.3	**21DAA601D**	1.27 - 1.45 mm/0.050 - 0.057 in				
	1.4	**21DAA601E**	1.37 - 1.55 mm/0.054 - 0.061 in				
526-160-10 **526-165-10**	1.75	**21DAA602A**	1.50 - 1.90 mm/0.059 - 0.075 in	17.5	33.8	3.5	**201436**
	2.00	**21DAA602B**	1.80 - 2.20 mm/0.071 - 0.087 in				
	2.25	**21DAA602C**	2.05 - 2.45 mm/0.081 - 0.096 in				
	2.50	**21DAA602D**	2.30 - 2.70 mm/0.091 - 0.106 in	22.5	39.3	3.5	**201437**
	2.75	**21DAA602E**	2.55 - 2.95 mm/0.100 - 0.116 in				
	3.00	**21DAA602F**	2.80 - 3.20 mm/0.110 - 0.126 in				
	3.25	**21DAA602G**	3.05 - 3.45 mm/0.120 - 0.136 in				
	3.50	**21DAA602H**	3.30 - 3.70 mm/0.130 - 0.146 in				
	3.75	**21DAA602J**	3.55 - 3.95 mm/0.140 - 0.156 in				
526-150-10 **526-155-10**	4.0	**21DAA603A**	3.7 - 4.3 mm/0.146 - 0.169 in	32	53	5.5	**201438**
	4.5	**21DAA603B**	4.2 - 4.8 mm/0.165 - 0.189 in				
	5.0	**21DAA603C**	4.7 - 5.3 mm/0.185 - 0.209 in				
	5.5	**21DAA603D**	5.2 - 5.8 mm/0.205 - 0.228 in				
	6.0	**21DAA603E**	5.7 - 6.3 mm/0.224 - 0.248 in				
	6.5	**21DAA603F**	6.2 - 6.8 mm/0.244 - 0.268 in				
	7.0	**21DAA603G**	6.7 - 7.3 mm/0.264 - 0.287 in				

Note: Pin point and contact point are consumable parts. Please replace them with new one when degrading of accuracy, operation, or measuring range. After replacement, calibrate using a reference instrument.

Unit: mm

Spanner

210188

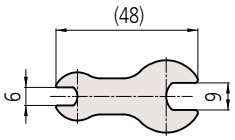

102148

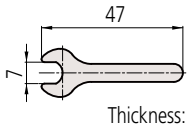

Thickness: 1.5

Extension rod

21AAA259E

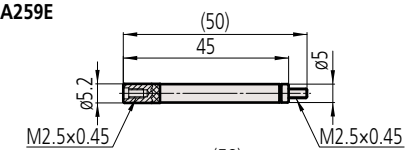

213634

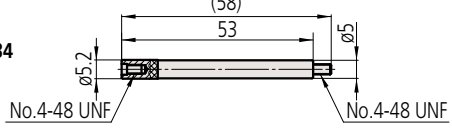

( ): **3.7 - 7.3 mm / 0.146 - 0.287 in range model**

Bore gage	Spanner	Extension rod
526-170-10	**210188**	**21AAA259E**
526-160-10		
526-150-10	**102148**	
526-175-10	**210188**	**213634**
526-165-10		
526-155-10	**102148**	

Note: This is not a component for extending the probing depth. (Standard Accessory)

Mitutoyo reserves the right to change any or all aspects of any product specification, including prices, designs and service content, without notice.

Bore Gages
SERIES 526 — for Extra Small Holes

- This series allows for agile and highly accurate comparative measurement of ø7 to 18 mm inside diameters.
- We offer an array of indicators. Contact us if you prefer any indicator other than the standard recommended indicator.
- Optional stand (**215-120-10**) is available for efficient measurement of multiple small holes.





526-101

Note: The dial indicator and the dial protection cover are optional.

SPECIFICATIONS

Metric

Order No.	Range (mm)	Accuracy* (µm)	Repeatability* (µm)	Bore gage	Dial indicator	Dial protection cover	Setting ring
526-101	7 - 10	4	2	**526-101**	Not supplied	Not supplied	Not supplied
526-102	10 - 18	6		**526-102**			
526-124-20	7 - 10	4		**526-101**	**2109AB-10** (Graduation: 0.001 mm)	**21DZA000**	
526-125-20	10 - 18	6		**526-102**			
526-126-20	7 - 10	4		**526-101**	**2046AB** (Graduation: 0.01 mm)		
526-127-20	10 - 18	6		**526-102**			

Inch

Order No.	Range (in)	Accuracy* (in)	Repeatability* (in)	Bore gage	Dial indicator	Dial protection cover	Setting ring
526-103	0.3 - 0.4	0.00016	0.00008	**526-103**	Not supplied	Not supplied	Not supplied
526-104	0.4 - 0.7	0.00024		**526-104**			
526-122-20	0.3 - 0.4	0.00016		**526-103**	**2923AB-10** (Graduation: 0.0001 in)	**21DZA000**	
526-123-20	0.4 - 0.7	0.00024		**526-104**			
526-119-20	0.3 - 0.4	0.00016		**526-103**	**2922AB** (Graduation: 0.0005 in)	**21DZA000**	
526-120-20	0.4 - 0.7	0.00024		**526-104**			

* Accuracy of the bore gage alone.
Note: Setting rings are not supplied.
Please purchase them separately if necessary. For details of the setting rings, refer to page C-52.

DIMENSIONS

Unit: mm

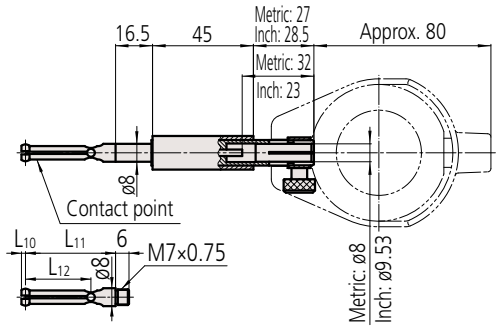

STANDARD ACCESSORIES

Bore gage (Main body)	Contact point						Spanner
	Marked No.	**Order No.**	Range	L_{10}	L_{11}	L_{12}	**Order No.**
526-101 526-103	1	**102469**	7.0 - 7.5 mm/0.28 - 0.30 in	1.8	40	29.2	**102148**
	2	**102470**	7.5 - 8.0 mm/0.30 - 0.32 in				
	3	**102471**	8.0 - 8.5 mm/0.32 - 0.34 in				
	4	**102472**	8.5 - 9.0 mm/0.34 - 0.36 in				
	5	**102473**	9.0 - 9.5 mm/0.36 - 0.38 in				
	6	**102474**	9.5 - 10.0 mm/0.38 - 0.40 in				
526-102 526-104	1	**102454**	10 - 11 mm/0.40 - 0.44 in	2.1	46	38	**102148**
	2	**102455**	11 - 12 mm/0.44 - 0.48 in	2.7			
	3	**102456**	12 - 13 mm/0.48 - 0.52 in				
	4	**102457**	13 - 14 mm/0.52 - 0.56 in				
	5	**102458**	14 - 15 mm/0.56 - 0.60 in				
	6	**102459**	15 - 16 mm/0.60 - 0.64 in				
	7	**102460**	16 - 17 mm/0.64 - 0.68 in				
	8	**102461**	17 - 18 mm/0.68 - 0.72 in				

Note: Contact point is consumable part. Please replace it with new one when degrading of accuracy, operation, or measuring range.

Measurement example



Measurement Principle

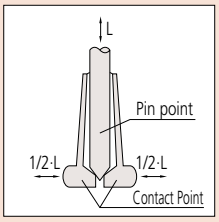

The dial protection cover, recommended indicators

Refer to page C-50.

Spanner
102148

Unit: mm

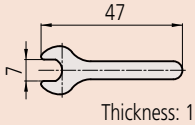

Mitutoyo reserves the right to change any or all aspects of any product specification, including prices, designs and service content, without notice.

Operating Method

- Pulling the lever forwards moves the platen upwards and the instrument goes into measurement mode.
- The V-attachment (optional) aids positioning the workpiece on the platen and is useful when measuring a large number of the same size of workpiece.

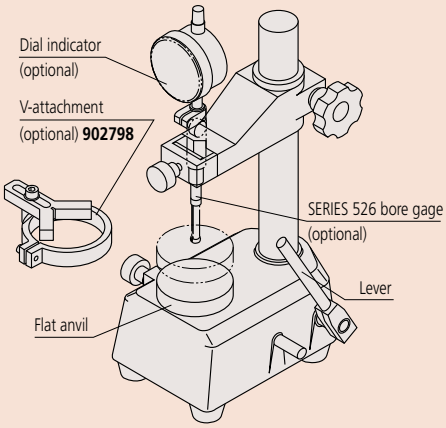

Bore Gage Stand SERIES 215

- Optimal for efficient measurement of multiple small holes with a bore gage. (SERIES **526**)



215-120-10

SPECIFICATIONS

Order No.	Measuring table displacement (mm)	Measuring table
215-120-10	38	Anvil (ø60 mm)

DIMENSIONS

Unit: mm

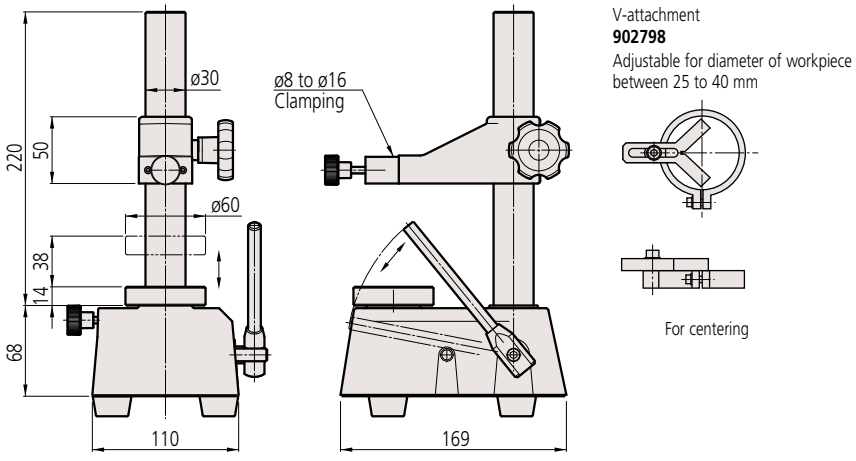

Mitutoyo reserves the right to change any or all aspects of any product specification, including prices, designs and service content, without notice.

Bore Gages
SERIES 511 — for Small Holes

- These gages are designed to measure the diameters of very small holes.
- Select an indicator from the recommended dial indicators and Digimatic indicators. Please contact us for advice when using an indicator other than the recommended indicators.
- Customized products with a longer rod below the grip or with a carbide anvil are available upon request.





511-201

Note: The dial indicator and the dial protection cover are optional.

SPECIFICATIONS

Metric

Order No.	Range (mm)	Stroke of contact point (mm)	Accuracy* (µm)	Repeatability* (µm)	Adjacent error* (µm)	Measuring force (N)	Guide force (N)
511-209	6 - 10	0.5	5	2	2	2 or less	—
511-201	10 - 18.5	0.6					6 or less
511-210-20	6 - 10	0.5	5	2	2	2 or less	—
511-203-20	10 - 18.5	0.6					6 or less
511-211-20	6 - 10	0.5	5	2	2	2 or less	—
511-204-20	10 - 18.5	0.6					6 or less

Order No.	Content of set					Probing depth (mm)
	Bore gage	Dial indicator	Dial protection cover	Anvil	Interchangeable Washer	
511-209	**511-209**	Not supplied	Not supplied	9 pcs.	Not supplied	50
511-201	**511-201**				1 pc.	100
511-210-20	**511-209**	**2109AB-10** (Graduation: 0.001 mm)	**21DZA000**	9 pcs.	Not supplied	50
511-203-20	**511-201**				1 pc.	100
511-211-20	**511-209**	**2046AB** (Graduation: 0.01 mm)	**21DZA000**	9 pcs.	Not supplied	50
511-204-20	**511-201**				1 pc.	100

Inch

Order No.	Range (in)	Stroke of contact point (in)	Accuracy* (in)	Repeatability* (in)	Adjacent error* (in)	Measuring force (N)	Guide force (N)
511-214	0.24 - 0.4	0.020	0.0002	0.00008	0.00008	2 or less	—
511-205	0.4 - 0.74	0.024					6 or less
511-212-20	0.24 - 0.4	0.020	0.0002	0.00008	0.00008	2 or less	—
511-206-20	0.4 - 0.74	0.024					6 or less
511-213-20	0.24 - 0.4	0.020	0.0002	0.00008	0.00008	2 or less	—
511-207-20	0.4 - 0.74	0.024					6 or less

Order No.	Content of set					Probing depth (in)
	Bore gage	Dial indicator	Dial protection cover	Anvil	Interchangeable Washer	
511-214	**511-214**	Not supplied	Not supplied	9 pcs.	Not supplied	2
511-205	**511-205**				1 pc.	4
511-212-20	**511-214**	**2923AB-10** (Graduation: 0.0001 in)	**21DZA000**	9 pcs.	Not supplied	2
511-206-20	**511-205**				1 pc.	4
511-213-20	**511-214**	**2922AB** (Graduation: 0.0005 in)	**21DZA000**	9 pcs.	Not supplied	2
511-207-20	**511-205**				1 pc.	4

* Accuracy of the bore gage alone.

Measurement example



Contact Points

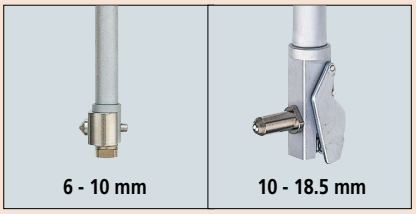

The dial protection cover, recommended indicators

Refer to page C-50.

Mitutoyo reserves the right to change any or all aspects of any product specification, including prices, designs and service content, without notice.

DIMENSIONS

Unit: mm

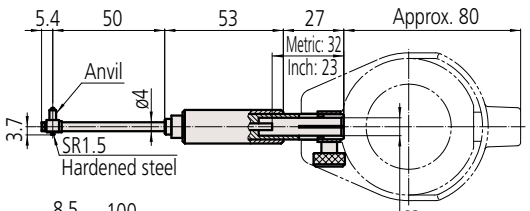

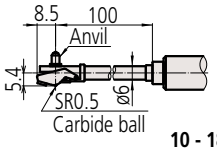

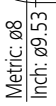

6 - 10 mm / 0.24 - 0.4 in range model

10 - 18.5 mm / 0.4 - 0 .74 in range model

Unit: mm

511-209 / 511-214
Anvil

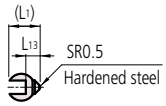

511-201 / 511-205
Anvil

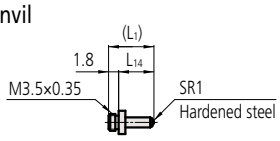

Interchangeable washer
(Supplied only with **511-201 / 511-205**)

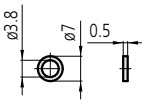

204355

STANDARD ACCESSORIES

Bore gage (Main body)	Anvil					Interchangeable Washer	Spanner
	Marked No.	**Order No.**	Indication of measuring size	L1	L13	**Order No.**	**Order No.**
511-209 511-214	1	**952168**	6.0 mm/0.24 in	4.7	1.2	Not supplied	**206709**
	2	**952169**	6.5 mm/0.26 in	5.3	1.7		
	3	**952170**	7.0 mm/0.28 in	5.8	2.2		
	4	**952414**	7.5 mm/0.30 in	6.3	2.7		
	5	**952415**	8.0 mm/0.32 in	6.8	3.2		
	6	**952416**	8.5 mm/0.34 in	7.3	3.7		
	7	**952417**	9.0 mm/0.36 in	7.8	4.2		
	8	**952418**	9.5 mm/0.38 in	8.3	4.7		
	9	**952419**	10.0 mm/0.40 in	8.8	5.2		

Bore gage (Main body)	Anvil					Interchangeable Washer	Spanner
	Marked No.	**Order No.**	Indication of measuring size	L1	L14	**Order No.**	**Order No.**
511-201 511-205	1	**204356**	10 mm/0.40 in	3.8	2	**204355**	**204354**
	2	**204357**	11 mm/0.44 in	4.8	3		
	3	**204358**	12 mm/0.48 in	5.8	4		
	4	**204359**	13 mm/0.52 in	6.8	5		
	5	**204360**	14 mm/0.56 in	7.8	6		
	6	**204361**	15 mm/0.60 in	8.8	7		
	7	**204362**	16 mm/0.64 in	9.8	8		
	8	**204363**	17 mm/0.68 in	10.8	9		
	9	**204364**	18 mm/0.72 in	11.8	10		

Spanner

206709

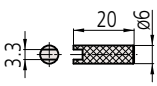

204354

Unit: mm

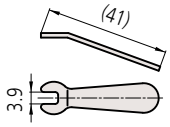

Thickness: 1.5

Mitutoyo reserves the right to change any or all aspects of any product specification, including prices, designs and service content, without notice.

Bore Gages
SERIES 511

- This series includes models for highly accurate measurement of ø18 to 400 mm inside diameters.
- The contact point and anvil have a carbide ball tip that is highly durable and abrasion-resistant.
- The grip minimizes the variation of indicator values by reducing heat transfer from the operator's hand.
- Optional extension rods are available for measuring deep holes. Customized products with a longer rod below the grip are also available upon request.



511-702

Note: The dial indicator and the dial protection cover are optional.

SPECIFICATIONS

Metric

Order No.	Range (mm)	Stroke of contact point (mm)	Accuracy* (µm)	Repeatability* (µm)	Adjacent error* (µm)	Measuring force (N)	Guide force (N)
511-701	18 - 35	1.2	2	0.5	1	4 or less	6 or less
511-702	35 - 60						
511-703	50 - 150	1.6				5 or less	10 or less
511-704	100 - 160						
511-705	160 - 250					6 or less	15 or less
511-706	250 - 400						
511-721-20	18 - 35	1.2	2	0.5	1	4 or less	6 or less
511-722-20	35 - 60						
511-723-20	50 - 150	1.6				5 or less	10 or less
511-724-20	100 - 160						
511-725-20	160 - 250					6 or less	15 or less
511-726-20	250 - 400						
511-711-20	18 - 35	1.2	2	0.5	1	4 or less	6 or less
511-712-20	35 - 60						
511-713-20	50 - 150	1.6				5 or less	10 or less
511-714-20	100 - 160						
511-715-20	160 - 250					6 or less	15 or less
511-716-20	250 - 400						
511-921-20	18 - 150	See SPECIFICATIONS of **511-701/702/703**					
511-922-20							
511-925-10							

Order No.	Content of set							Probing depth (mm)
	Bore gage	Dial indicator	Dial protection cover	Anvil	Interchangeable Washer	Sub-Anvil	Spanner	
511-701	**511-701**	Not supplied	Not supplied	9 pcs.	2 pcs.	Not supplied	1 pc.	100
511-702	**511-702**			6 pcs.	4 pcs.		Not supplied	150
511-703	**511-703**			11 pcs.		1 pc.		
511-704	**511-704**			13 pcs.		Not supplied		
511-705	**511-705**			6 pcs.	7 pcs.			250
511-706	**511-706**			5 pcs.		1 pc.		
511-721-20	**511-701**	**2109AB-10** (Graduation: 0.001 mm)	**21DZA000**	9 pcs.	2 pcs.	Not supplied	1 pc.	100
511-722-20	**511-702**			6 pcs.	4 pcs.		Not supplied	150
511-723-20	**511-703**			11 pcs.		1 pc.		
511-724-20	**511-704**			13 pcs.		Not supplied		
511-725-20	**511-705**			6 pcs.	7 pcs.			250
511-726-20	**511-706**			5 pcs.		1 pc.		
511-711-20	**511-701**	**2046AB** (Graduation: 0.01 mm)	**21DZA000**	9 pcs.	2 pcs.	Not supplied	1 pc.	100
511-712-20	**511-702**			6 pcs.	4 pcs.		Not supplied	150
511-713-20	**511-703**			11 pcs.		1 pc.		
511-714-20	**511-704**			13 pcs.		Not supplied		
511-715-20	**511-705**			6 pcs.	7 pcs.			250
511-716-20	**511-706**			5 pcs.		1 pc.		
511-921-20	Set of **511-701/702/703**	**2046AB**	**21DZA000**	See SPECIFICATIONS of **511-701/702/703**				
511-922-20		**2109AB-10**						
511-925-10		**543-310B**						

* Accuracy of the bore gage alone.
Note 1: A 50 mm sub-anvil is supplied with **511-703**, and a 75 mm sub-anvil is supplied with **511-706**.
Note 2: It is not permissible to use a sub-anvil other than as supplied as a standard accessory, or widen a measuring range by using multiple sub-anvils. (The measurement accuracy in such cases is not guaranteed.)

Contact Points

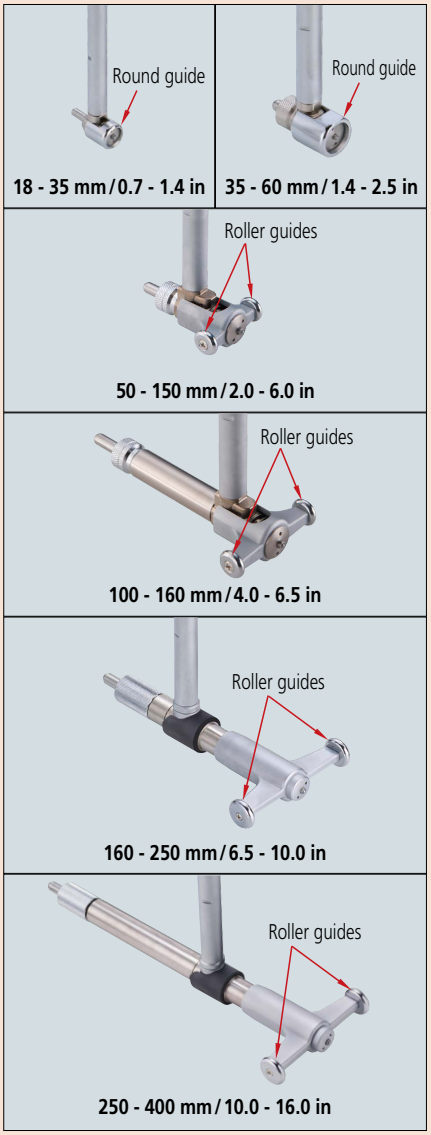

Extension Rod
Refer to page C-49.

The dial protection cover, recommended indicators
Refer to page C-50.

Setting rings
Refer to pages C-52 to C-55.

Mitutoyo reserves the right to change any or all aspects of any product specification, including prices, designs and service content, without notice.

Recommended Digimatic Indicators (see Chapter F)

- Metric type:
  543-310B-10 (**ID-C112GXB2**: 0.001 mm)
- Inch type:
  543-312B (**ID-C112GEXB**: 0.001 mm/0.00005 in)



- The ID measurement can be performed easily since the minimum value is detected automatically.
- Up to three combinations of master value and tolerance value can be set.
- Nine measurement results (maximum) can be saved and recalled from memory (when no external device is connected).
  Refer to page F-12 for details.

Anvil

A carbide ball is used for the contact point. It is more abrasion resistant than a hardened steel ball and, as its surface is smoother than that of a carbide tip, the workpiece is less liable to be marked.

Comparison of abrasion resistance

Hardened steel ball (conventional model)



Abrasion depth: 0.1 mm
750 HV or more

Carbide ball (current model)



Abrasion depth: 0.001 mm
1350 HV or more

Inspection method

- Load a 0.5 N weight on the anvil, and slide for 1,000 m on abrasive paper of 9 µm (#2000) particle size.

Comparison of marks on the workpiece

Carbide tip (conventional model)

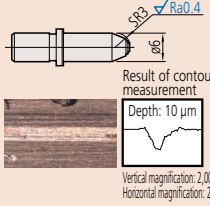

Carbide ball (current model)

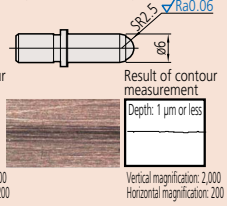

Inspection method

- Load a 4 N weight on the anvil, and slide on the aluminum plate back and forth for 20 times.

SPECIFICATIONS

Inch

Order No.	Range (in)	Stroke of contact point (in)	Accuracy* (in)	Repeatability* (in)	Adjacent error* (in)	Measuring force (N)	Guide force (N)
511-731	0.7 - 1.4	0.047	0.00008	0.00002	0.00004	4 or less	6 or less
511-732	1.4 - 2.5						
511-733	2.0 - 6.0	0.063				5 or less	10 or less
511-734	4.0 - 6.5						
511-735	6.5 - 10.0					6 or less	15 or less
511-736	10.0 - 16.0						
511-751-20	0.7 - 1.4	0.047	0.00008	0.00002	0.00004	4 or less	6 or less
511-752-20	1.4 - 2.5						
511-753-20	2.0 - 6.0	0.063				5 or less	10 or less
511-754-20	4.0 - 6.5						
511-755-20	6.5 - 10.0					6 or less	15 or less
511-756-20	10.0 - 16.0						
511-741-20	0.7 - 1.4	0.047	0.00008	0.00002	0.00004	4 or less	6 or less
511-742-20	1.4 - 2.5						
511-743-20	2.0 - 6.0	0.063				5 or less	10 or less
511-744-20	4.0 - 6.5						
511-745-20	6.5 - 10.0					6 or less	15 or less
511-746-20	10.0 - 16.0						
511-931-20	0.7 - 6.0	See SPECIFICATIONS of **511-731/732/733**					
511-932-20							
511-935-10							

Order No.	Content of set							Probing depth (in)
	Bore gage	Dial indicator	Dial protection cover	Anvil	Interchangeable Washer	Sub-Anvil	Spanner	
511-731	**511-731**	Not supplied	Not supplied	9 pcs.	2 pcs.	Not supplied	1 pc.	4
511-732	**511-732**			6 pcs.	4 pcs.		Not supplied	6
511-733	**511-733**			11 pcs.		1 pc.		
511-734	**511-734**			13 pcs.		Not supplied		
511-735	**511-735**			6 pcs.	7 pcs.			10
511-736	**511-736**			5 pcs.		1 pc.		
511-751-20	**511-731**	**2923AB-10** (Graduation: 0.0001 in)	**21DZA000**	9 pcs.	2 pcs.	Not supplied	1 pc.	4
511-752-20	**511-732**			6 pcs.	4 pcs.		Not supplied	6
511-753-20	**511-733**			11 pcs.		1 pc.		
511-754-20	**511-734**			13 pcs.		Not supplied		
511-755-20	**511-735**			6 pcs.	7 pcs.			10
511-756-20	**511-736**			5 pcs.		1 pc.		
511-741-20	**511-731**	**2922AB** (Graduation: 0.0005 in)	**21DZA000**	9 pcs.	2 pcs.	Not supplied	1 pc.	4
511-742-20	**511-732**			6 pcs.	4 pcs.		Not supplied	6
511-743-20	**511-733**			11 pcs.		1 pc.		
511-744-20	**511-734**			13 pcs.		Not supplied		
511-745-20	**511-735**			6 pcs.	7 pcs.			10
511-746-20	**511-736**			5 pcs.		1 pc.		
511-931-20	Set of **511-731/732/733**	**2922AB**	**21DZA000**	See SPECIFICATIONS of **511-731/732/733**				
511-932-20		**2923AB-10**						
511-935-10		**543-312B**						

* Accuracy of the bore gage alone.
Note 1: A 2 in sub-anvil is supplied with **511-733**, and a 3 in sub-anvil is supplied with **511-736**.
Note 2: It is not permissible to use a sub-anvil other than as supplied as a standard accessory, or widen a measuring range by using multiple sub-anvils. (The measurement accuracy in such cases is not guaranteed.)

DIMENSIONS

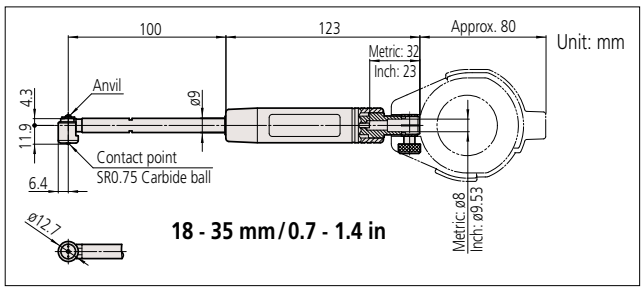

Unit: mm

Anvil

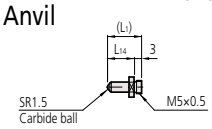

Interchangeable washer

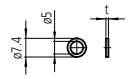

t (mm)	Order No.
0.5	**205623**
1	**205624**

Spanner

102148

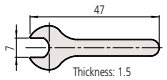

STANDARD ACCESSORIES

Bore gage (Main body)	Anvil				
	Marked No.	Order No.	Indication of measuring size	L_1	L_{14}
511-701 511-731	1	**21DZA213A**	18 mm/0.71 in	5.5	2.5
	2	**21DZA213B**	20 mm/0.79 in	7.5	4.5
	3	**21DZA213C**	22 mm/0.87 in	9.5	6.5
	4	**21DZA213D**	24 mm/0.94 in	11.5	8.5
	5	**21DZA213E**	26 mm/1.02 in	13.5	10.5
	6	**21DZA213F**	28 mm/1.10 in	15.5	12.5
	7	**21DZA213G**	30 mm/1.18 in	17.5	14.5
	8	**21DZA213H**	32 mm/1.26 in	19.5	16.5
	9	**21DZA213J**	34 mm/1.34 in	21.5	18.5

Mitutoyo reserves the right to change any or all aspects of any product specification, including prices, designs and service content, without notice.

Bore Gages
SERIES 511

DIMENSIONS

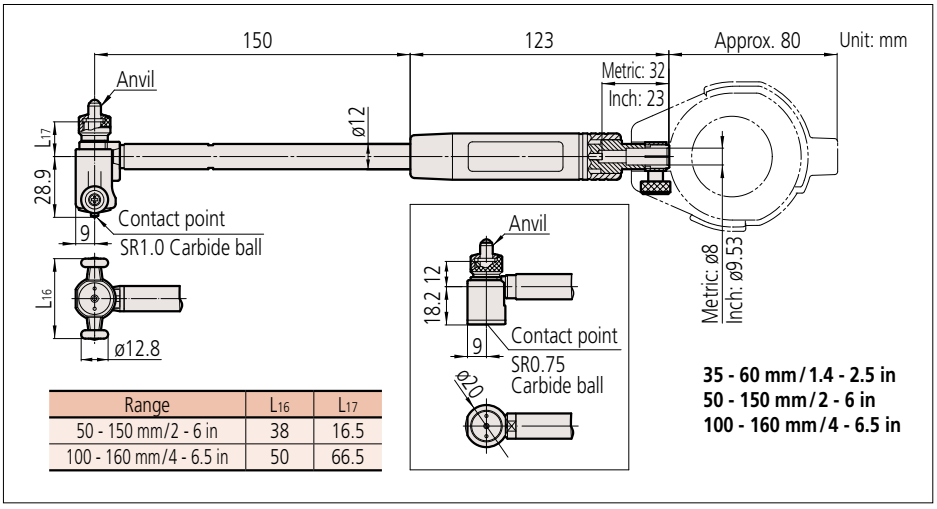

Range	L16	L17
50 - 150 mm/2 - 6 in	38	16.5
100 - 160 mm/4 - 6.5 in	50	66.5

35 - 60 mm/1.4 - 2.5 in
50 - 150 mm/2 - 6 in
100 - 160 mm/4 - 6.5 in

Unit: mm

Anvil

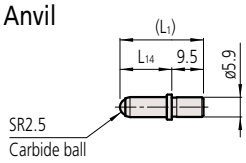

Interchangeable washer

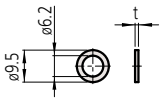

t (mm)	Order No.
0.5	**205457**
1	**205458**
2	**205459**
3	**205460**

Sub-anvil

(Supplied only for **511-703/733**)

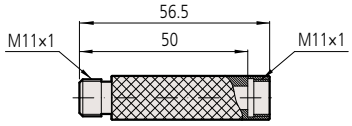

102178

Note: It is not permissible to use a sub-anvil other than as supplied as a standard accessory, or widen a measuring range by using multiple sub-anvils. (The measurement accuracy in such cases is not guaranteed.)

STANDARD ACCESSORIES

Bore gage (Main body)	Anvil				
	Marked No.	**Order No.**	Indication of measuring size	L1	L14
511-702 **511-732**	1	**21DZA232A**	35 mm/1.38 in	15	5.5
	2	**21DZA232B**	40 mm/1.57 in	20	10.5
	3	**21DZA232C**	45 mm/1.77 in	25	15.5
	4	**21DZA232D**	50 mm/1.97 in	30	20.5
	5	**21DZA232E**	55 mm/2.17 in	35	25.5
	6	**21DZA232F**	60 mm/2.36 in	40	30.5
511-703 **511-733** ( ) Using 50 mm/2 in Sub-Anvil	1	**21DZA232A**	50 mm (100 mm)/1.97 in (3.94 in)	15	5.5
	2	**21DZA232B**	55 mm (105 mm)/2.17 in (4.13 in)	20	10.5
	3	**21DZA232C**	60 mm (110 mm)/2.36 in (4.33 in)	25	15.5
	4	**21DZA232D**	65 mm (115 mm)/2.55 in (4.53 in)	30	20.5
	5	**21DZA232E**	70 mm (120 mm)/2.74 in (4.72 in)	35	25.5
	6	**21DZA232F**	75 mm (125 mm)/2.93 in (4.92 in)	40	30.5
	7	**21DZA232G**	80 mm (130 mm)/3.12 in (5.12 in)	45	35.5
	8	**21DZA232H**	85 mm (135 mm)/3.31 in (5.31 in)	50	40.5
	9	**21DZA232J**	90 mm (140 mm)/3.50 in (5.51 in)	55	45.5
	10	**21DZA232L**	95 mm (145 mm)/3.69 in (5.71 in)	60	50.5
	11	**21DZA232M**	100 mm (150 mm)/3.88 in (5.91 in)	65	55.5
511-704 **511-734**	1	**21DZA232A**	100 mm/3.94 in	15	5.5
	2	**21DZA232B**	105 mm/4.13 in	20	10.5
	3	**21DZA232C**	110 mm/4.33 in	25	15.5
	4	**21DZA232D**	115 mm/4.53 in	30	20.5
	5	**21DZA232E**	120 mm/4.72 in	35	25.5
	6	**21DZA232F**	125 mm/4.92 in	40	30.5
	7	**21DZA232G**	130 mm/5.12 in	45	35.5
	8	**21DZA232H**	135 mm/5.31 in	50	40.5
	9	**21DZA232J**	140 mm/5.51 in	55	45.5
	10	**21DZA232L**	145 mm/5.71 in	60	50.5
	11	**21DZA232M**	150 mm/5.91 in	65	55.5
	12	**21DZA232N**	155 mm/6.10 in	70	60.5
	13	**21DZA232P**	160 mm/6.30 in	75	65.5

Mitutoyo reserves the right to change any or all aspects of any product specification, including prices, designs and service content, without notice.

DIMENSIONS

Unit: mm

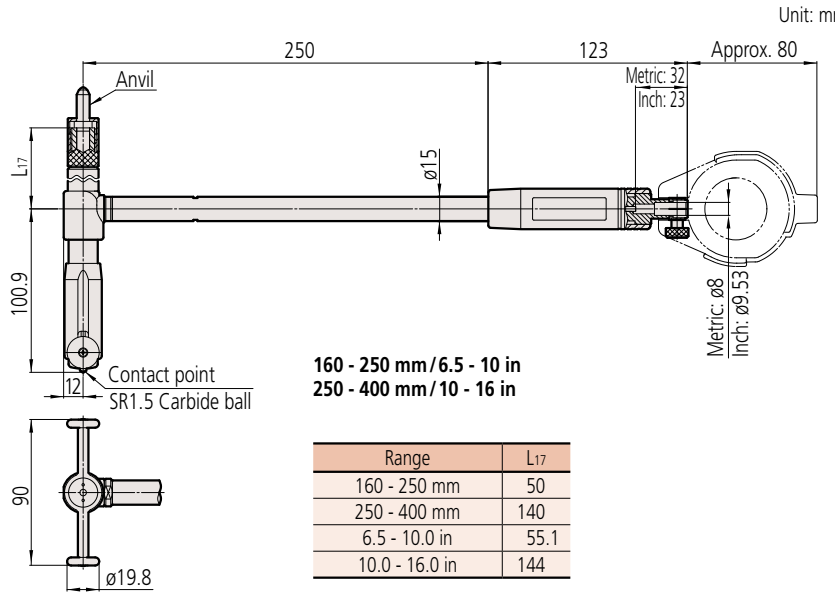

160 - 250 mm / 6.5 - 10 in
250 - 400 mm / 10 - 16 in

Range	L_{17}
160 - 250 mm	50
250 - 400 mm	140
6.5 - 10.0 in	55.1
10.0 - 16.0 in	144

Unit: mm

Anvil

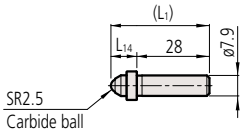

Interchangeable washer

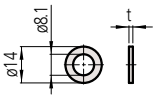

t (mm)	Order No.
0.5	**205467**
1	**205461**
2	**205462**
3	**205463**
4	**205464**
5	**205465**
6	**205466**

Sub-anvil

Supplied only for **511-706** (**202974**) and **511-736** (**202975**)

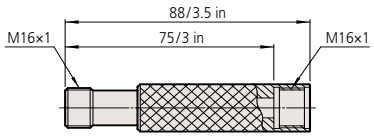

202974 (**511-706**)
202975 (**511-736**)

Note: It is not permissible to use a sub-anvil other than as supplied as a standard accessory, or widen a measuring range by using multiple sub-anvils. (The measurement accuracy in such cases is not guaranteed.)

STANDARD ACCESSORIES

Bore gage (Main body)	Anvil				
	Marked No.	**Order No.**	Indication of measuring size	L_1	L_{14}
511-705 **511-735**	1	**21DZA241A**	160 mm/6.50 in	38	10
	2	**21DZA241B**	175 mm/7.09 in	53	25
	3	**21DZA241C**	190 mm/7.68 in	68	40
	4	**21DZA241D**	205 mm/8.27 in	83	55
	5	**21DZA241E**	220 mm/8.86 in	98	70
	6	**21DZA241F**	235 mm/9.45 in	113	85
511-706 **511-736** ( ) Using 75 mm/3 in Sub-Anvil	1	**21DZA241A**	250 mm (325 mm)/10.00 in (13.00 in)	38	10
	2	**21DZA241B**	265 mm (340 mm)/10.59 in (13.59 in)	53	25
	3	**21DZA241C**	280 mm (355 mm)/11.18 in (14.18 in)	68	40
	4	**21DZA241D**	295 mm (370 mm)/11.77 in (14.77 in)	83	55
	5	**21DZA241E**	310 mm (385 mm)/12.36 in (15.36 in)	98	70

Mitutoyo reserves the right to change any or all aspects of any product specification, including prices, designs and service content, without notice.

Bore Gages
SERIES 511 — Short Leg Type

- As it is light and easy to handle with a short rod below the grip, the operator can work smoothly when inserting it into a narrow space or measuring an object on the table.
- The contact point and anvil have a carbide ball tip that is highly durable and abrasion-resistant.
- The grip minimizes the variation of indicator values affected by heat transfer from the operator's hand.



511-761



511-761

Note: The dial indicator and the dial protection cover are optional.

SPECIFICATIONS

Metric

Order No.	Range (mm)	Stroke of contact point (mm)	Accuracy* (µm)	Repeatability* (µm)	Adjacent error* (µm)	Measuring force (N)	Guide force (N)
511-761	18 - 35	1.2	2	0.5	1	4 or less	6 or less
511-762	35 - 60						
511-763	50 - 150	1.6				5 or less	10 or less
511-764	100 - 160						
511-771-20	18 - 35	1.2	2	0.5	1	4 or less	6 or less
511-772-20	35 - 60						
511-773-20	50 - 150	1.6				5 or less	10 or less
511-774-20	100 - 160						
511-766-20	18 - 35	1.2	2	0.5	1	4 or less	6 or less
511-767-20	35 - 60						
511-768-20	50 - 150	1.6				5 or less	10 or less
511-769-20	100 - 160						

Order No.	Content of set							Probing depth (mm)
	Bore gage	Dial indicator	Dial protection cover	Anvil	Interchangeable Washer	Sub-Anvil	Spanner	
511-761	**511-761**	Not supplied	Not supplied	9 pcs.	2 pcs.	Not supplied	1 pc.	50
511-762	**511-762**			6 pcs.	4 pcs.		Not supplied	
511-763	**511-763**			11 pcs.		1 pc.		
511-764	**511-764**			13 pcs.		Not supplied		
511-771-20	**511-761**	**2109AB-10** (Graduation: 0.001 mm)	**21DZA000**	9 pcs.	2 pcs.	Not supplied	1 pc.	50
511-772-20	**511-762**			6 pcs.	4 pcs.		Not supplied	
511-773-20	**511-763**			11 pcs.		1 pc.		
511-774-20	**511-764**			13 pcs.		Not supplied		
511-766-20	**511-761**	**2046AB** (Graduation: 0.01 mm)	**21DZA000**	9 pcs.	2 pcs.	Not supplied	1 pc.	50
511-767-20	**511-762**			6 pcs.	4 pcs.		Not supplied	
511-768-20	**511-763**			11 pcs.		1 pc.		
511-769-20	**511-764**			13 pcs.		Not supplied		

* Accuracy of the bore gage alone.
Note 1: A 50 mm sub-anvil is supplied with **511-763**.
Note 2: It is not permissible to use a sub-anvil other than as supplied as a standard accessory, or widen a measuring range by using multiple sub-anvils. (The measurement accuracy in such cases is not guaranteed.)

Measurement example



Contact Points

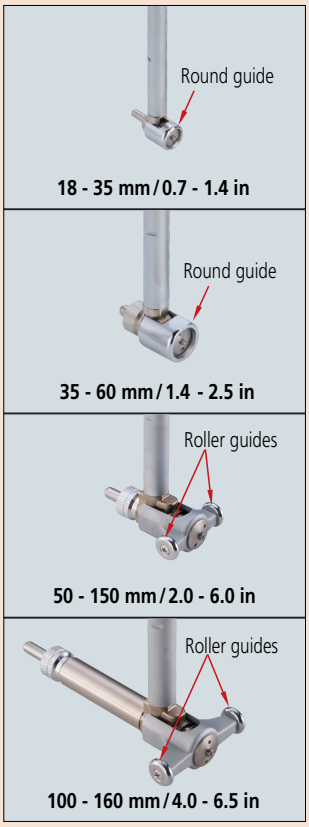

The dial protection cover, recommended indicators

Refer to page C-50.

Mitutoyo reserves the right to change any or all aspects of any product specification, including prices, designs and service content, without notice.

SPECIFICATIONS

Inch

Order No.	Range (in)	Stroke of contact point (in)	Accuracy* (in)	Repeatability* (in)	Adjacent error* (in)	Measuring force (N)	Guide force (N)
511-781	0.7 - 1.4	0.047	0.00008	0.00002	0.00004	4 or less	6 or less
511-782	1.4 - 2.5						
511-783	2.0 - 6.0	0.063				5 or less	10 or less
511-784	4.0 - 6.5						
511-791-20	0.7 - 1.4	0.047	0.00008	0.00002	0.00004	4 or less	6 or less
511-792-20	1.4 - 2.5						
511-793-20	2.0 - 6.0	0.063				5 or less	10 or less
511-794-20	4.0 - 6.5						
511-786-20	0.7 - 1.4	0.047	0.00008	0.00002	0.00004	4 or less	6 or less
511-787-20	1.4 - 2.5						
511-788-20	2.0 - 6.0	0.063				5 or less	10 or less
511-789-20	4.0 - 6.5						

Order No.	Content of set							Probing depth (in)
	Bore gage	Dial indicator	Dial protection cover	Anvil	Interchangeable Washer	Sub-Anvil	Spanner	
511-781	**511-781**	Not supplied	Not supplied	9 pcs.	2 pcs.	Not supplied	1 pc.	2
511-782	**511-782**			6 pcs.	4 pcs.		Not supplied	
511-783	**511-783**			11 pcs.		1 pc.		
511-784	**511-784**			13 pcs.		Not supplied		
511-791-20	**511-781**	**2923AB-10** (Graduation: 0.0001 in)	**21DZA000**	9 pcs.	2 pcs.	Not supplied	1 pc.	2
511-792-20	**511-782**			6 pcs.	4 pcs.		Not supplied	
511-793-20	**511-783**			11 pcs.		1 pc.		
511-794-20	**511-784**			13 pcs.		Not supplied		
511-786-20	**511-781**	**2922AB** (Graduation: 0.0005 in)	**21DZA000**	9 pcs.	2 pcs.	Not supplied	1 pc.	2
511-787-20	**511-782**			6 pcs.	4 pcs.		Not supplied	
511-788-20	**511-783**			11 pcs.		1 pc.		
511-789-20	**511-784**			13 pcs.		Not supplied		

* Accuracy of the bore gage alone.
Note 1: A 2 inch sub-anvil is supplied with **511-783**.
Note 2: It is not permissible to use a sub-anvil other than as supplied as a standard accessory, or widen a measuring range by using multiple sub-anvils. (The measurement accuracy in such cases is not guaranteed.)

DIMENSIONS

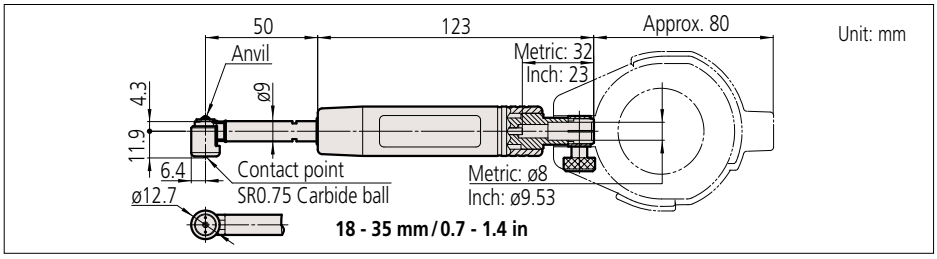

Unit: mm

Anvil

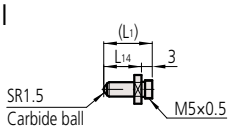

Interchangeable washer

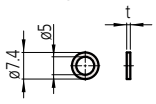

t (mm)	Order No.
0.5	**205623**
1	**205624**

Spanner **102148**

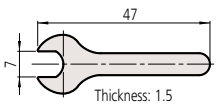

STANDARD ACCESSORIES

Bore gage (Main body)	Anvil				
	Marked No.	**Order No.**	Indication of measuring size	L_1	L_{14}
511-761 **511-781**	1	**21DZA213A**	18 mm/0.71 in	5.5 mm/0.22 in	2.5 mm/0.10 in
	2	**21DZA213B**	20 mm/0.79 in	7.5 mm/0.30 in	4.5 mm/0.18 in
	3	**21DZA213C**	22 mm/0.87 in	9.5 mm/0.37 in	6.5 mm/0.26 in
	4	**21DZA213D**	24 mm/0.94 in	11.5 mm/0.45 in	8.5 mm/0.33 in
	5	**21DZA213E**	26 mm/1.02 in	13.5 mm/0.53 in	10.5 mm/0.41 in
	6	**21DZA213F**	28 mm/1.10 in	15.5 mm/0.61 in	12.5 mm/0.49 in
	7	**21DZA213G**	30 mm/1.18 in	17.5 mm/0.69 in	14.5 mm/0.57 in
	8	**21DZA213H**	32 mm/1.26 in	19.5 mm/0.77 in	16.5 mm/0.65 in
	9	**21DZA213J**	34 mm/1.34 in	21.5 mm/0.85 in	18.5 mm/0.73 in

Mitutoyo reserves the right to change any or all aspects of any product specification, including prices, designs and service content, without notice.

Bore Gages
SERIES 511 — Short Leg Type

DIMENSIONS

Unit: mm

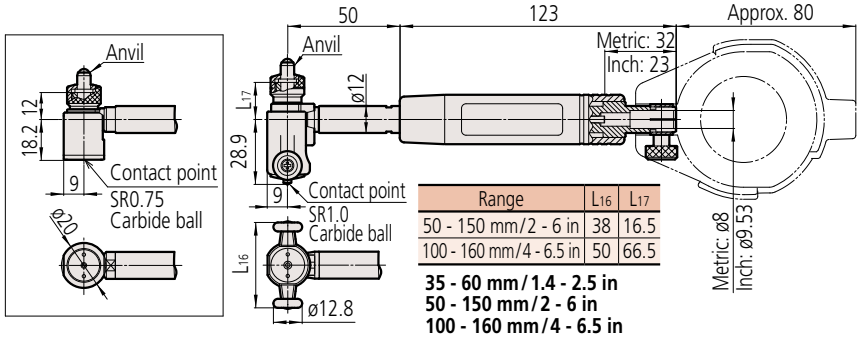

Range	L16	L17
50 - 150 mm/2 - 6 in	38	16.5
100 - 160 mm/4 - 6.5 in	50	66.5

35 - 60 mm/1.4 - 2.5 in
50 - 150 mm/2 - 6 in
100 - 160 mm/4 - 6.5 in

Unit: mm

Anvil

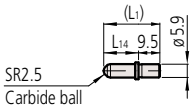

Interchangeable washer

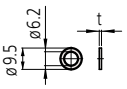

t (mm)	Order No.
0.5	**205457**
1	**205458**
2	**205459**
3	**205460**

Sub-anvil (Supplied only for **511-763** and **511-783**.)

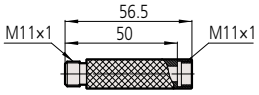

102178

Note: It is not permissible to use a sub-anvil other than as supplied as a standard accessory, or widen a measuring range by using multiple sub-anvils. (The measurement accuracy in such cases is not guaranteed.)

STANDARD ACCESSORIES

Bore gage (Main body)	Anvil				
	Marked No.	**Order No.**	Indication of measuring size	L1	L14
511-762 **511-782**	1	**21DZA232A**	35 mm/1.38 in	15	5.5
	2	**21DZA232B**	40 mm/1.57 in	20	10.5
	3	**21DZA232C**	45 mm/1.77 in	25	15.5
	4	**21DZA232D**	50 mm/1.97 in	30	20.5
	5	**21DZA232E**	55 mm/2.17 in	35	25.5
	6	**21DZA232F**	60 mm/2.36 in	40	30.5
511-763 **511-783** ( ) Using 50 mm/2 in Sub-Anvil	1	**21DZA232A**	50 mm (100 mm)/1.97 in (3.94 in)	15	5.5
	2	**21DZA232B**	55 mm (105 mm)/2.17 in (4.13 in)	20	10.5
	3	**21DZA232C**	60 mm (110 mm)/2.36 in (4.33 in)	25	15.5
	4	**21DZA232D**	65 mm (115 mm)/2.55 in (4.53 in)	30	20.5
	5	**21DZA232E**	70 mm (120 mm)/2.74 in (4.72 in)	35	25.5
	6	**21DZA232F**	75 mm (125 mm)/2.93 in (4.92 in)	40	30.5
	7	**21DZA232G**	80 mm (130 mm)/3.12 in (5.12 in)	45	35.5
	8	**21DZA232H**	85 mm (135 mm)/3.31 in (5.31 in)	50	40.5
	9	**21DZA232J**	90 mm (140 mm)/3.50 in (5.51 in)	55	45.5
	10	**21DZA232L**	95 mm (145 mm)/3.69 in (5.71 in)	60	50.5
	11	**21DZA232M**	100 mm (150 mm)/3.88 in (5.91 in)	65	55.5
511-764 **511-784**	1	**21DZA232A**	100 mm/3.94 in	15	5.5
	2	**21DZA232B**	105 mm/4.13 in	20	10.5
	3	**21DZA232C**	110 mm/4.33 in	25	15.5
	4	**21DZA232D**	115 mm/4.53 in	30	20.5
	5	**21DZA232E**	120 mm/4.72 in	35	25.5
	6	**21DZA232F**	125 mm/4.92 in	40	30.5
	7	**21DZA232G**	130 mm/5.12 in	45	35.5
	8	**21DZA232H**	135 mm/5.31 in	50	40.5
	9	**21DZA232J**	140 mm/5.51 in	55	45.5
	10	**21DZA232L**	145 mm/5.71 in	60	50.5
	11	**21DZA232M**	150 mm/5.91 in	65	55.5
	12	**21DZA232N**	155 mm/6.10 in	70	60.5
	13	**21DZA232P**	160 mm/6.30 in	75	65.5

Recommended Digimatic Indicators

Refer to page C-36.

Mitutoyo reserves the right to change any or all aspects of any product specification, including prices, designs and service content, without notice.

Measurement example



The dial protection cover, recommended indicators

Refer to page C-50.

Bore Gages
SERIES 511 — with Micrometer Head

- This series includes models for measuring ø60 to 800 mm inside diameters.
- The micrometer head is used for dimensional setting. The dimension can be easily changed without replacing the anvil and washer.
- The contact point has a carbide ball tip that is highly durable and abrasion-resistant.
- The grip minimizes the variation of indicator values affected by heat transfer from the operator's hand.



Note: The dial indicator and the dial protection cover are optional.

511-803

SPECIFICATIONS

Metric

Order No.	Range (mm)	Stroke of contact point (mm)	Accuracy* (µm)	Repeatability* (µm)	Adjacent error* (µm)	Measuring force (N)	Guide force (N)
511-803	60 - 100	1.6	2	0.5	1	5 or less	10 or less
511-804	100 - 160						
511-805	150 - 250					6 or less	15 or less
511-806	250 - 400						
511-807	400 - 600						20 or less
511-808	600 - 800						
511-823-20	60 - 100	1.6	2	0.5	1	5 or less	10 or less
511-824-20	100 - 160						
511-825-20	150 - 250					6 or less	15 or less
511-826-20	250 - 400						
511-827-20	400 - 600						20 or less
511-828-20	600 - 800						
511-813-20	60 - 100	1.6	2	0.5	1	5 or less	10 or less
511-814-20	100 - 160						
511-815-20	150 - 250					6 or less	15 or less
511-816-20	250 - 400						
511-817-20	400 - 600						20 or less
511-818-20	600 - 800						

Order No.	Content of set						Probing depth (mm)
	Bore gage	Dial indicator	Dial protection cover	Micrometer head	Sub-Anvil	Spanner	
511-803	**511-803**	Not supplied	Not supplied	1 pc.	2 pcs.	3 pcs.	150
511-804	**511-804**				3 pcs.	2 pcs.	
511-805	**511-805**				4 pcs.		250
511-806	**511-806**				3 pcs.		
511-807	**511-807**				2 pcs.		
511-808	**511-808**				2 pcs.		
511-823-20	**511-803**	**2109AB-10** (Graduation: 0.001 mm)	**21DZA000**	1 pc.	2 pcs.	3 pcs.	150
511-824-20	**511-804**				3 pcs.	2 pcs.	
511-825-20	**511-805**				4 pcs.		250
511-826-20	**511-806**				3 pcs.		
511-827-20	**511-807**				2 pcs.		
511-828-20	**511-808**				2 pcs.		
511-813-20	**511-803**	**2046AB** (Graduation: 0.01 mm)	**21DZA000**	1 pc.	2 pcs.	3 pcs.	150
511-814-20	**511-804**				3 pcs.	2 pcs.	
511-815-20	**511-805**				4 pcs.		250
511-816-20	**511-806**				3 pcs.		
511-817-20	**511-807**				2 pcs.		
511-818-20	**511-808**				2 pcs.		

* Accuracy of the bore gage alone.
Note 1: Storage boxes for **511-807 / 808** models are made of wood. The boxes of other models are made of plastic.
Note 2: It is not permissible to expand measuring range using sub-anvils other than as supplied as standard accessories. (The measurement accuracy in such cases is not guaranteed.)

Mitutoyo reserves the right to change any or all aspects of any product specification, including prices, designs and service content, without notice.

Bore Gages
SERIES 511 — with Micrometer Head

SPECIFICATIONS

Inch

Order No.	Range (in)	Stroke of contact point (in)	Accuracy* (in)	Repeatability* (in)	Adjacent error* (in)	Measuring force (N)	Guide force (N)
511-833	2.4 - 4.0	0.063	0.00008	0.00002	0.00004	5 or less	10 or less
511-834	4.0 - 6.4						
511-835	6.0 - 10.0					6 or less	15 or less
511-836	10.0 - 16.0						
511-837	16.0 - 24.0						20 or less
511-838	24.0 - 32.0						
511-853-20	2.4 - 4.0	0.063	0.00008	0.00002	0.00004	5 or less	10 or less
511-854-20	4.0 - 6.4						
511-855-20	6.0 - 10.0					6 or less	15 or less
511-856-20	10.0 - 16.0						
511-857-20	16.0 - 24.0						20 or less
511-858-20	24.0 - 32.0						
511-843-20	2.4 - 4.0	0.063	0.00008	0.00002	0.00004	5 or less	10 or less
511-844-20	4.0 - 6.4						
511-845-20	6.0 - 10.0					6 or less	15 or less
511-846-20	10.0 - 16.0						
511-847-20	16.0 - 24.0						20 or less
511-848-20	24.0 - 32.0						

Order No.	Content of set						Probing depth (in)
	Bore gage	Dial indicator	Dial protection cover	Micrometer head	Sub-Anvil	Spanner	
511-833	**511-833**	Not supplied	Not supplied	1 pc.	2 pcs.	3 pcs.	6
511-834	**511-834**				3 pcs.	2 pcs.	
511-835	**511-835**				4 pcs.		10
511-836	**511-836**				3 pcs.		
511-837	**511-837**				2 pcs.		
511-838	**511-838**				2 pcs.		
511-853-20	**511-833**	**2923AB-10** (Graduation: 0.0001 in)	**21DZA000**	1 pc.	2 pcs.	3 pcs.	4
511-854-20	**511-834**				3 pcs.	2 pcs.	6
511-855-20	**511-835**				4 pcs.		
511-856-20	**511-836**				3 pcs.		
511-857-20	**511-837**				2 pcs.		10
511-858-20	**511-838**				2 pcs.		
511-843-20	**511-833**	**2922AB** (Graduation: 0.0005 in)	**21DZA000**	1 pc.	2 pcs.	3 pcs.	4
511-844-20	**511-834**				3 pcs.	2 pcs.	6
511-845-20	**511-835**				4 pcs.		
511-846-20	**511-836**				3 pcs.		
511-847-20	**511-837**				2 pcs.		10
511-848-20	**511-838**				2 pcs.		

* Accuracy of the bore gage alone.
Note 1: Storage boxes for **511-837 / 838** models are made of wood. The boxes of other models are made of plastic.
Note 2: It is not permissible to expand measuring range using sub-anvils other than as supplied as standard accessories.
(The measurement accuracy in such cases is not guaranteed.)

DIMENSIONS

Unit: mm

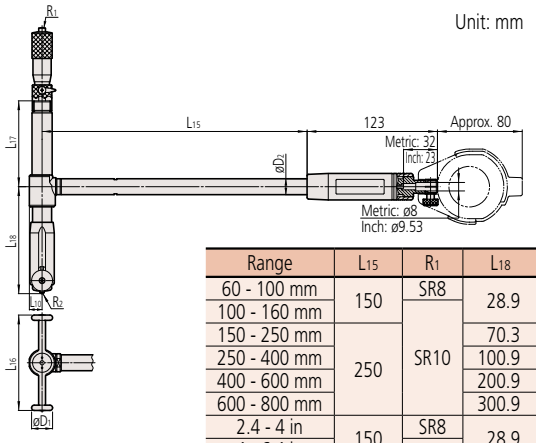

Range	L15	R1	L18	R2	L10	L16	øD1	øD2	L17
60 - 100 mm	150	SR8	28.9	SR1.0	9	38	ø12.8	ø12	7
100 - 160 mm		SR10				50			16.5
150 - 250 mm	250		70.3	SR1.5	15	78	ø19.8	ø15	25.1
250 - 400 mm			100.9		12	90			81
400 - 600 mm			200.9		16	120			85
600 - 800 mm			300.9						185
2.4 - 4 in	150	SR8	28.9	SR1.0	9	38	ø12.8	ø12	7
4 - 6.4 in		SR10				50			16.5
6 - 10 in	250		70.3	SR1.5	15	78	ø19.8	ø15	25.9
10 - 16 in			100.9		12	90			81
16 - 24 in			200.9		16	120			85
24 - 32 in			300.9						188.2

Recommended Digimatic Indicators
Refer to page C-36.

Mitutoyo reserves the right to change any or all aspects of any product specification, including prices, designs and service content, without notice.

Contact Points

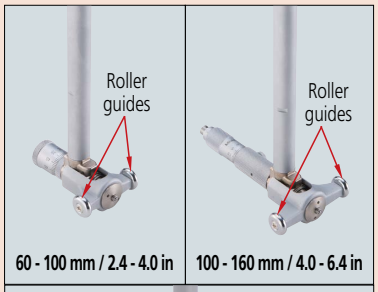

60 - 100 mm / 2.4 - 4.0 in | 100 - 160 mm / 4.0 - 6.4 in

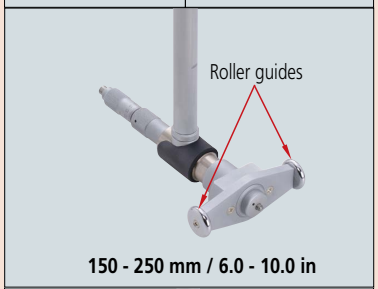

150 - 250 mm / 6.0 - 10.0 in

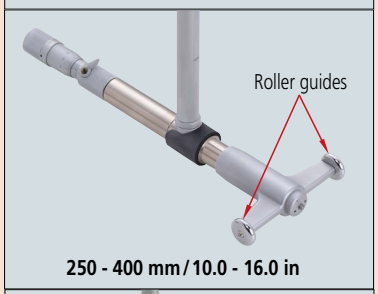

250 - 400 mm / 10.0 - 16.0 in

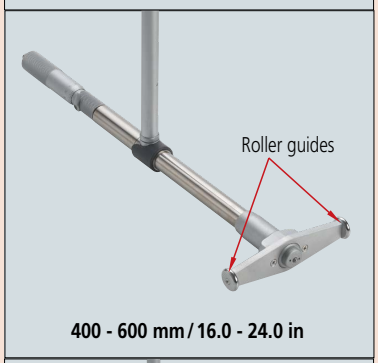

400 - 600 mm / 16.0 - 24.0 in

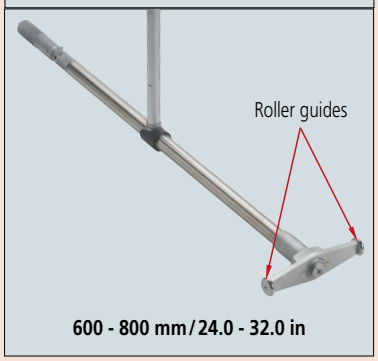

600 - 800 mm / 24.0 - 32.0 in

Unit: mm

Sub-anvil

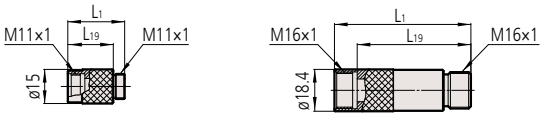

Note: It is not permissible to use a sub-anvil other than as supplied as a standard accessory, or widen a measuring range by using multiple sub-anvils. (The measurement accuracy in such cases is not guaranteed.)

Spanner

301336

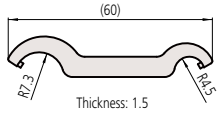

202863

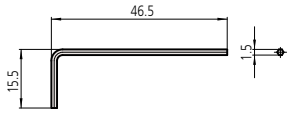

200154

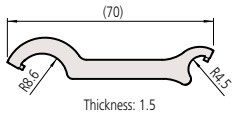

STANDARD ACCESSORIES

Metric

Bore gage (Main body)	Micrometer head			Sub-Anvil				Spanner
	Order No.	Stroke (mm)	Screw size	Marked No. (mm)	Order No.	L1 (mm)	L19 (mm)	Order No.
511-803	21DZA267	10	M11×1	10	208892	15	10	301336 (2 pcs.) 202863 (1 pc.)
				20	208894	25	20	
511-804	21DZA268	13	M11×1	10	208892	15	10	301336 (2 pcs.)
				20	208894 (2 pcs.)	25	20	
511-805	21DZA268	13	M11×1	10	208892	15	10	301336 (2 pcs.)
				20	208894 (2 pcs.)	25	20	
				50	21DAA492	55	50	
511-806	953118	25	M16×1	25	208926	35	25	200154 (2 pcs.)
				50	208928 (2 pcs.)	60	50	
511-807	953120	50	M16×1	50	208928	60	50	200154 (2 pcs.)
				100	208932	110	100	
511-808	953120	50	M16×1	50	208928	60	50	200154 (2 pcs.)
				100	208932	110	100	

Inch

Bore gage (Main body)	Micrometer head			Sub-Anvil				Spanner
	Order No.	Stroke (in)	Screw size	Marked No. (in)	Order No.	L1 (in)	L19 (in)	Order No.
511-833	21DZA272	0.4	M11×1	0.4	208893	0.6	0.4	301336 (2 pcs.) 202863 (1 pc.)
				0.8	208895	1.0	0.8	
511-834	21DZA273	0.5	M11×1	0.4	208893	0.6	0.4	301336 (2 pcs.)
				0.8	208895 (2 pcs.)	1.0	0.8	
511-835	21DZA273	0.5	M11×1	0.4	208893	0.6	0.4	301336 (2 pcs.)
				0.8	208895 (2 pcs.)	1.0	0.8	
				2	21DAA493	2.2	2	
511-836	21DZA275	1.0	M16×1	1	208927	1.4	1	200154 (2 pcs.)
				2	208929 (2 pcs.)	2.4	2	
511-837	902313	2.0	M16×1	2	208929	2.4	2	200154 (2 pcs.)
				4	208933	4.4	4	
511-838	902313	2.0	M16×1	2	208929	2.4	2	200154 (2 pcs.)
				4	208933	4.4	4	

C

Mitutoyo reserves the right to change any or all aspects of any product specification, including prices, designs and service content, without notice.

Mitutoyo

Bore Gages
SERIES 511 — for Blind Holes

- Capable of ID (inside diameter) measurement close to the bottom of a hole.
- The contact point and anvil have a carbide ball tip that is highly durable and abrasion-resistant.
- Optional Extension Rods can be attached for measuring deep holes. (For details, refer to page C-49)



511-415

Note: The dial indicator and the dial protection cover are optional.

Measurement example

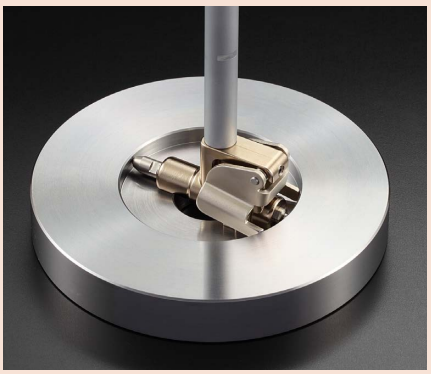

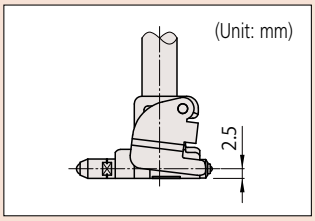

The dial protection cover, recommended indicators

Refer to page C-50.

SPECIFICATIONS

Metric

Order No.	Range (mm)	Stroke of contact point (mm)	Accuracy* (µm)	Repeatability* (µm)	Adjacent error* (µm)	Measuring force (N)	Guide force (N)	Content of set: Bore gage	Dial indicator	Dial protection cover	Anvil	Washer	Probing depth (mm)
511-415	15 - 35	1.2	4	1	1	4 or less	6 or less	**511-415**	Not supplied	Not supplied	11 pcs.	1 pc.	150
511-416	35 - 60							**511-416**			6 pcs.	4 pcs.	
511-417	50 - 150					5 or less	10 or less	**511-417**			11 pcs.		
511-425-20	15 - 35	1.2	4	1	1	4 or less	6 or less	**511-415**	**2046AB** (Graduation: 0.01 mm)	**21DZA000**	11 pcs.	1 pc.	150
511-426-20	35 - 60							**511-416**			6 pcs.	4 pcs.	
511-427-20	50 - 150					5 or less	10 or less	**511-417**			11 pcs.		
511-435-20	15 - 35	1.2	4	1	1	4 or less	6 or less	**511-415**	**2109AB-10** (Graduation: 0.001 mm)	**21DZA000**	11 pcs.	1 pc.	150
511-436-20	35 - 60							**511-416**			6 pcs.	4 pcs.	
511-437-20	50 - 150					5 or less	10 or less	**511-417**			11 pcs.		

Inch

Order No.	Range (in)	Stroke of contact point (in)	Accuracy* (in)	Repeatability* (in)	Adjacent error* (in)	Measuring force (N)	Guide force (N)	Content of set: Bore gage	Dial indicator	Dial protection cover	Anvil	Washer	Probing depth (in)
511-418	0.6 - 1.4	0.047	0.00016	0.00004	0.00004	4 or less	6 or less	**511-418**	Not supplied	Not supplied	11 pcs.	1 pc.	6
511-419	1.4 - 2.4							**511-419**			6 pcs.	4 pcs.	
511-420	2.0 - 6.0					5 or less	10 or less	**511-420**			11 pcs.		
511-428-20	0.6 - 1.4	0.047	0.00016	0.00004	0.00004	4 or less	6 or less	**511-418**	**2922AB** (Graduation: 0.0005 in)	**21DZA000**	11 pcs.	1 pc.	6
511-429-20	1.4 - 2.4							**511-419**			6 pcs.	4 pcs.	
511-430-20	2.0 - 6.0					5 or less	10 or less	**511-420**			11 pcs.		
511-438-20	0.6 - 1.4	0.047	0.00016	0.00004	0.00004	4 or less	6 or less	**511-418**	**2923AB-10** (Graduation: 0.0001 in)	**21DZA000**	11 pcs.	1 pc.	6
511-439-20	1.4 - 2.4							**511-419**			6 pcs.	4 pcs.	
511-440-20	2.0 - 6.0					5 or less	10 or less	**511-420**			11 pcs.		

* Accuracy of the bore gage alone.

Note 1: A 10 mm (0.4 in) sub-anvil is supplied with **511-415**/**425-20**/**435-20**/**418**/**428-20**/**438-20** and a 50 mm (2 in) sub-anvil is supplied with **511-417**/**427-20**/**437-20**/**420**/**430-20**/**440-20**.

Note 2: It is not permissible to use a sub-anvil other than as supplied as a standard accessory, or widen a measuring range by using multiple sub-anvils. (The measurement accuracy in such cases is not guaranteed.)

Mitutoyo reserves the right to change any or all aspects of any product specification, including prices, designs and service content, without notice.

Contact Points



15 - 35 mm/0.6 - 1.4 in

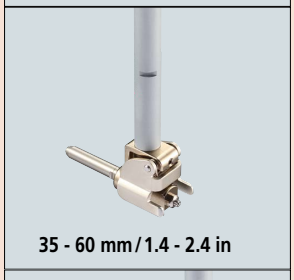

35 - 60 mm/1.4 - 2.4 in

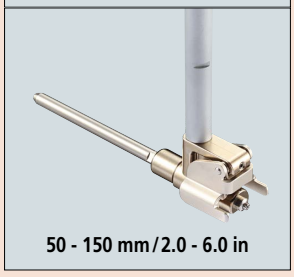

50 - 150 mm/2.0 - 6.0 in

Recommended Digimatic Indicators

Refer to page C-36.

DIMENSIONS

Unit: mm

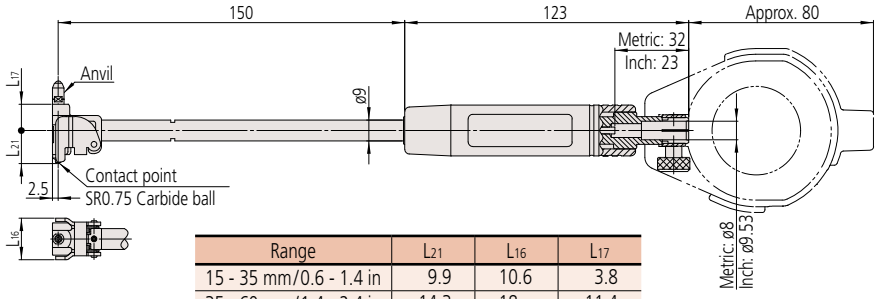

Range	L21	L16	L17
15 - 35 mm/0.6 - 1.4 in	9.9	10.6	3.8
35 - 60 mm/1.4 - 2.4 in	14.3	18	11.4
50 - 150 mm/2.0 - 6.0 in	22.7	22	18

Anvil

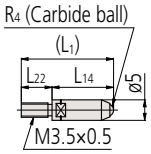

Interchangeable washer

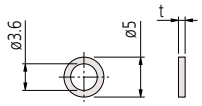

Sub-anvil

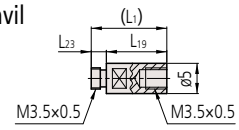

Unit: mm

Note: It is not permissible to use a sub-anvil other than as supplied as a standard accessory, or widen a measuring range by using multiple sub-anvils. (The measurement accuracy in such cases is not guaranteed.)

Spanner
204354

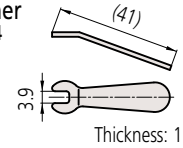

Washer holder
212202

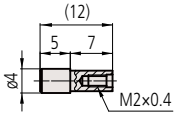

Locking screw
212203

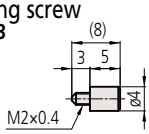

STANDARD ACCESSORIES

Bore gage (Main body)	Anvil							Interchangeable washer		Sub-Anvil		
	Marked No.	Order No.	Indication of measuring size	L1	L22	R4	L14	Order No.	t	Order No.	L23	L19
511-415 511-418 ( ) Using 10 mm/0.4 in Sub-Anvil	1	21DZA376A	15 mm (25 mm)/0.59 in (0.98 in)	4.5	2.5	SR1	2	212127	0.5 mm/0.02 in	21DAA563	2.5	10 mm/0.4 in
	2	21DZA376B	16 mm (26 mm)/0.63 in (1.02 in)	5.5			3					
	3	21DZA376C	17 mm (27 mm)/0.67 in (1.06 in)	6.5			4					
	4	21DZA376D	18 mm (28 mm)/0.71 in (1.10 in)	7.5			5					
	5	21DZA376E	19 mm (29 mm)/0.75 in (1.14 in)	8.5			6					
	6	21DZA376F	20 mm (30 mm)/0.79 in (1.18 in)	9.5		SR1.5	7					
	7	21DZA376G	21 mm (31 mm)/0.83 in (1.22 in)	10.5			8					
	8	21DZA376H	22 mm (32 mm)/0.87 in (1.26 in)	11.5			9					
	9	21DZA376J	23 mm (33 mm)/0.91 in (1.30 in)	12.5			10					
	10	21DZA376L	24 mm (34 mm)/0.94 in (1.34 in)	13.5			11					
	11	21DZA376M	25 mm (35 mm)/0.98 in (1.38 in)	14.5			12					
511-416 511-419	1	21DZA404A	35 mm/1.38 in	17.5	7.5	SR1.5	10	212127 212128 212129 212130	0.5 mm/0.02 in 1.0 mm/0.04 in 2.0 mm/0.08 in 3.0 mm/0.12 in			
	2	21DZA404B	40 mm/1.57 in	22.5			15					
	3	21DZA404C	45 mm/1.77 in	27.5			20					
	4	21DZA404D	50 mm/1.97 in	32.5			25					
	5	21DZA404E	55 mm/2.17 in	37.5			30					
	6	21DZA404F	60 mm/2.36 in	42.5			35					
511-417 511-420 ( ) Using 50 mm/2 in Sub-Anvil	1	21DZA404A	50 mm (100 mm)/1.97 in (3.94 in)	17.5	7.5	SR1.5	10	212127 212128 212129 212130	0.5 mm/0.02 in 1.0 mm/0.04 in 2.0 mm/0.08 in 3.0 mm/0.12 in	21DAA596	7.5	50 mm/2 in
	2	21DZA404B	55 mm (105 mm)/2.17 in (4.13 in)	22.5			15					
	3	21DZA404C	60 mm (110 mm)/2.36 in (4.33 in)	27.5			20					
	4	21DZA404D	65 mm (115 mm)/2.56 in (4.53 in)	32.5			25					
	5	21DZA404E	70 mm (120 mm)/2.76 in (4.72 in)	37.5			30					
	6	21DZA404F	75 mm (125 mm)/2.95 in (4.92 in)	42.5			35					
	7	21DZA404G	80 mm (130 mm)/3.15 in (5.12 in)	47.5			40					
	8	21DZA404H	85 mm (135 mm)/3.35 in (5.31 in)	52.5			45					
	9	21DZA404J	90 mm (140 mm)/3.54 in (5.51 in)	57.5			50					
	10	21DZA404L	95 mm (145 mm)/3.74 in (5.71 in)	62.5			55					
	11	21DZA404M	100 mm (150 mm)/3.94 in (5.91 in)	67.5			60					

Mitutoyo reserves the right to change any or all aspects of any product specification, including prices, designs and service content, without notice.

MeasurLink® ENABLED Data Management Software by Mitutoyo ABSOLUTE™

Bore Gages
SERIES 511 — ABSOLUTE Digimatic Bore Gages

- These ABSOLUTE Digimatic bore gages are exclusively designed for inside diameter measurement.
- ABS (ABSOLUTE) type bore gages are not subject to overspeed error.
- Up to four Extension Rods (optional) can be connected for measuring at the bottom of a hole 2 m deep.
- The display and grip can be rotated up to 320° and the display can be inclined up to 90°, so that it is easily readable from any direction.
- The minimum value holding function provides easy measurement of hole diameter.





511-501

SPECIFICATIONS

Metric

Order No.	511-501	511-502
Range	45 - 100 mm	100 - 160 mm
Stroke of contact point	1.2 mm	
Resolution	0.001 mm	
Wide range accuracy*1	0.003 mm or less	
Adjacent error	0.002 mm or less	
Repeatability	0.002 mm or less	
Measuring force	5 N or less	
Guide force	10 N or less	
Battery	SR44 (2 pcs.), **938882** For initial operational checks (standard accessory)	
Battery life*2	Approx. 2,000 hours under normal use.	
Scale type	ABSOLUTE electrostatic linear encoder	
Sampling frequency*3	50 times/s	
Dust / Water protection level*4	IP53 (IEC60529/JIS D0207, C0920)	
Display	· 7 segments 6 digits decimal numeric with minus sign, in/mm · Tolerance judge indication · Analog indication	
Net weight	500 g	570 g

Inch

Order No.	511-521	511-522
Range	1.8 - 4.0 in	4.0 - 6.5 in
Stroke of contact point	0.048 in/1.2 mm	
Resolution	0.00005 in/0.001 mm	
Wide range accuracy*1	0.0001 in/0.003 mm or less	
Adjacent error	0.00008 in/0.002 mm or less	
Repeatability	0.0001 in/0.002 mm or less	
Measuring force	5 N or less	
Guide force	10 N or less	
Battery	SR44 (2 pcs.), **938882** For initial operational checks (standard accessory)	
Battery life*2	Approx. 2,000 hours under normal use.	
Scale type	ABSOLUTE electrostatic linear encoder	
Sampling frequency*3	50 times/s	
Dust / Water protection level*4	IP53 (IEC60529/JIS D0207, C0920)	
Display	· 7 segments 6 digits decimal numeric with minus sign, in/mm · Tolerance judge indication · Analog indication	
Net weight	500 g	570 g

*1 A quantizing error is excluded.
*2 When the usage time per day is eight hours.
*3 If the contact point detecting speed is over 50 µm/s, the peak value may not be displayed correctly.
*4 The level indicated is valid only if the output connector cap is installed.

Measurement example



Function

- Preset function
- Master value registration (3 values maximum)
- Tolerance judgment
- Upper/lower limit registration (3 values maximum)
- Minimum value holding
- Data output
- Display rotation (320°)
- Display inclination (90°, 7 steps)
- Low battery alarm display
- Error display

Extension Rod (optional)

250 mm (10 in): **21DZA089**
500 mm (20 in): **21DZA081**
Up to four extension rods can be jointed, and a maximum length of 2 m is allowed.

Optional Accessories

Order No.	Type	description
905338	F	Connecting cable (1 m)
905409	F	Connecting cable (2 m)
06AFM380F	F	USB Input Tool Direct (2 m)
02AZD790F	F	Connecting cables for **U-WAVE-T** (160 mm)
02AZE140F	F	Connecting cables for **U-WAVE-T** For foot switch

Mitutoyo reserves the right to change any or all aspects of any product specification, including prices, designs and service content, without notice.

Gauge Blocks and Block Sets for Setting the Origin or Master Value (optional)

• Typical application



• Rectangular gauge blocks
Note: Available only for **511-501/521**
516-118-10
516-118-60 with calibration certificate

Description*		Order No.	Qty
Nominal length (mm)	1	**611611-021**	1
	2	**611612-021**	1
	3	**611613-021**	1
	5	**611615-021**	1
	10	**611671-021**	1
	20	**611672-021**	1
	30	**611673-021**	1
	40	**611674-021**	1
Flat jaw		**630030**	1 pair (2 pcs.)
Holder 160 mm		**619004**	1
Certificate of inspection			1

* Equivalent to JIS B 7506 Grade 0

• Square gauge blocks
Note: Available only for **511-501/521**
516-119-10
516-119-60 with calibration certificate

Description*		Order No.	Qty
Nominal length (mm)	1	**614611-021**	1
	2	**614612-021**	1
	3	**614613-021**	1
	5	**614615-021**	1
	10	**614671-021**	1
	20	**614672-021**	1
	30	**614673-021**	1
	40	**614674-021**	1
Flat jaw		**619072**	1 pair (2 pcs.)
Tie rod 3 in		**619062**	1
Tie rod 2 1/4 in		**619063**	1
Tie rod 1 1/2 in		**619064**	1
Flat head screw 1 1/4 in		**619057**	2
Flat head screw 5/8 in		**619058**	2
Certificate of inspection			1

* Equivalent to JIS B 7506 Grade 0

DIMENSIONS

Unit: mm

511-501 and **511-521**

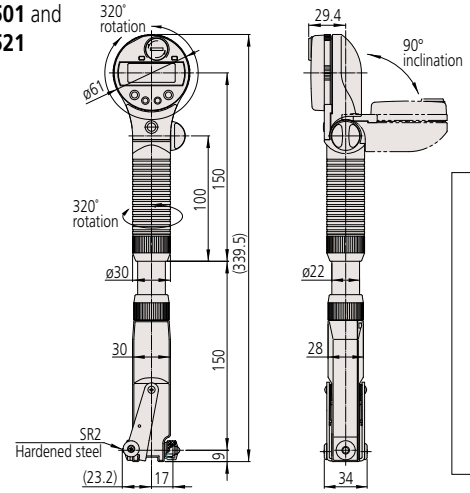

511-502 and **511-522**

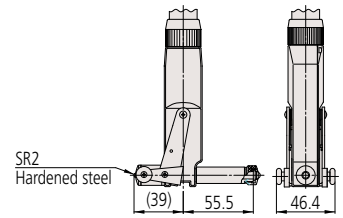

Extension rod (optional)

Unit: mm

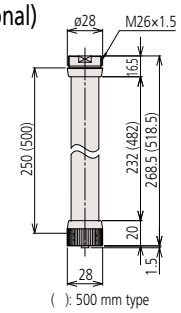

( ): 500 mm type

STANDARD ACCESSORIES

Bore gage	Anvil					Interchangeable washer	
(Main body)	Marked No.	Order No.	Indication of measuring size	L_1 (mm)	L_{14} (mm)	Order No.	t
511-501 511-521	1	**21DZA232A**	45 mm/1.8 in	15	5.5	**205457**	0.5 mm/0.02 in
	2	**21DZA232B**	50 mm/2.0 in	20	10.5	**205458**	1.0 mm/0.04 in
	3	**21DZA232C**	55 mm/2.2 in	25	15.5	**205459**	2.0 mm/0.08 in
	4	**21DZA232D**	60 mm/2.4 in	30	20.5	**205460**	3.0 mm/0.12 in
	5	**21DZA232E**	65 mm/2.6 in	35	25.5		
	6	**21DZA232F**	70 mm/2.8 in	40	30.5		
	7	**21DZA232G**	75 mm/3.0 in	45	35.5		
	8	**21DZA232H**	80 mm/3.2 in	50	40.5		
	9	**21DZA232J**	85 mm/3.4 in	55	45.5		
	10	**21DZA232L**	90 mm/3.6 in	60	50.5		
	11	**21DZA232M**	95 mm/3.8 in	65	55.5		
	12	**21DZA232N**	100 mm/4.0 in	70	60.5		
511-502 511-522	1	**21DZA232A**	100 mm/4.0 in	15	5.5	**205457**	0.5 mm/0.02 in
	2	**21DZA232B**	105 mm/4.2 in	20	10.5	**205458**	1.0 mm/0.04 in
	3	**21DZA232C**	110 mm/4.4 in	25	15.5	**205459**	2.0 mm/0.08 in
	4	**21DZA232D**	115 mm/4.6 in	30	20.5	**205460**	3.0 mm/0.12 in
	5	**21DZA232E**	120 mm/4.8 in	35	25.5		
	6	**21DZA232F**	125 mm/5.0 in	40	30.5		
	7	**21DZA232G**	130 mm/5.2 in	45	35.5		
	8	**21DZA232H**	135 mm/5.4 in	50	40.5		
	9	**21DZA232J**	140 mm/5.6 in	55	45.5		
	10	**21DZA232L**	145 mm/5.8 in	60	50.5		
	11	**21DZA232M**	150 mm/6.0 in	65	55.5		
	12	**21DZA232N**	155 mm/6.2 in	70	60.5		
	13	**21DZA232P**	160 mm/6.4 in	75	65.5		

Anvil

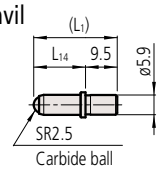

Interchangeable washer

Unit: mm

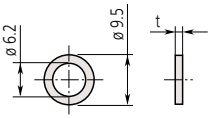

C

Mitutoyo reserves the right to change any or all aspects of any product specification, including prices, designs and service content, without notice.

Extension Rod
SERIES 511 — Accessories for Bore Gages

- Extension Rods enable measurement of deeper holes when attached to a bore gage. (See the below table for applicable combination with bore gages.)

Note 1: When using an extension rod that is 500 mm or longer, hold the bore gage upright during measurement.
Note 2: Only one extension rod can be attached to a bore gage. It is not possible to use more than one extension rod.
Note 3: The extension rod cannot be used for products with a custom size or custom specifications.

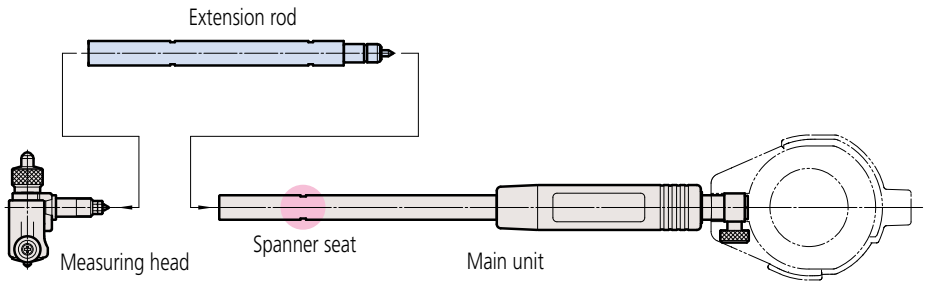

C

SPECIFICATIONS

Applicable model	Extension rod length (mm)					Extension rod diameter (mm)	Spanner Order No.
Order No.	125	250	500	750	1000		
511-701/511-731 **511-415/511-418** **511-416/511-419** **511-417/511-420**	**953549**	**953550**	**953551**	—	—	ø9	**102148** (2 pcs.)
511-702/511-732 **511-703/511-733** **511-704/511-734** **511-803/511-833** **511-804/511-834**	**953552**	**953553**	**953554**	**953555**	**953556**	ø12	**212556** (2 pcs.)
511-705/511-735 **511-706/511-736** **511-805/511-835** **511-806/511-836** **511-807/511-837** **511-808/511-838**	**953557**	**952361**	**953558**	**953559**	**953560**	ø15	**212556** (2 pcs.)

Note 1: If an extension rod is attached, the measuring accuracy may degrade due to factors such as rod deflection.
Note 2: Spanner is supplied as standard.

Mitutoyo reserves the right to change any or all aspects of any product specification, including prices, designs and service content, without notice.

Note: Among indicators other than those recommended, the following types of indicator cannot be used.
- Indicators with a total length of F and G of less than 31.8 mm
- Indicators with a measuring range of more than 12.7 mm (ISO/JIS Type)/0.9 in (AMSE/ANSI Type)
- Dust-proof and water-proof indicators with a contact point and spindle covered with rubber

Please contact us if you have any questions about products.

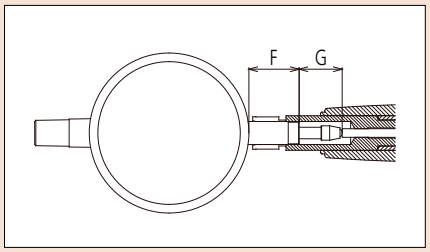

Recommended Indicators Accessories for Bore Gages

- In addition to bore gages, we offer a wide range of Digimatic indicators and dial indicators.
  Some of the products recommended for use with bore gages are shown below.

RECOMMENDED INDICATORS



2046AB
Graduation 0.01 mm,
Measuring range 10 mm
Refer to page F-28 for details.



2109AB-10
Graduation 0.001 mm,
Measuring range 1 mm
Refer to page F-30 for details.

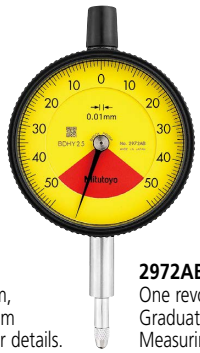

2972AB
One revolution type,
Graduation 0.01 mm,
Measuring range 1 mm
Refer to page F-40 for details.



2900AB-10
One revolution type,
Graduation 0.001 mm,
Measuring range 0.08 mm
Refer to page F-36 for details.



543-310B-10
ABSOLUTE Digimatic Indicator
Resolution 0.001 mm
Refer to page F-12 for details.

DIAL PROTECTION COVER

- The cover protects the indicator from unexpected impact while handling the bore gage.
- It can offer protection to indicators that are fitted with a lug or flat back.
- It can also be used for **543-310B-10** **ID-C112GXB2**, an ABS Digimatic indicator for bore gages.

  Note: This protection cover is intended to be attached to a bore gage and cannot be used for a dial indicator or Digimatic indicator alone.



Unit: mm

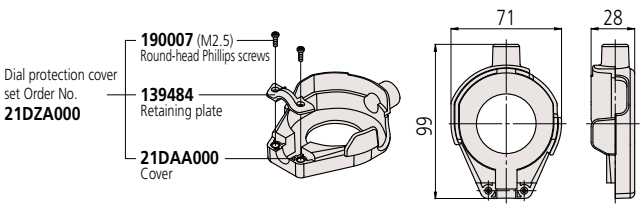

C

Bore Gage Checker SERIES 515

- The Bore Gage Checker allows easy setting of dial bore gages with ranges of 18 mm (0.7 in) through 400 mm (16 in) using gauge blocks.
- Can be used in both vertical and horizontal positions.



515-590

SPECIFICATIONS

Order No.	Applicable range	Flatness of parallel jaw	Parallelism of parallel jaw
515-590	18 - 400 mm (0.7 - 16 in)	0.5 µm	1 µm

Measurement example

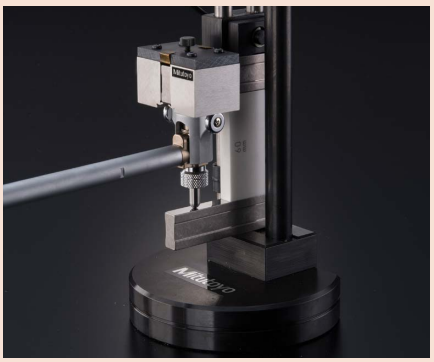

Standard Accessories

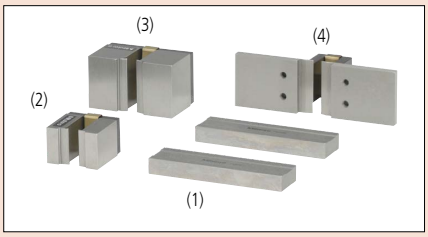

(1) Parallel jaw 2 pcs. **630030**
(2) Attachment A **940088**
(3) Attachment B **940089**
(4) Attachment C **940090**

Mitutoyo reserves the right to change any or all aspects of any product specification, including prices, designs and service content, without notice.

Setting Rings
SERIES 177 — Accessories for Inside Micrometers, Holtest and Dial Bore Gages

Made-to-order
- Custom-made setting rings
  Mitutoyo can manufacture setting rings to your size and design.
- Nominal size range
  1 mm to 305 mm (steel)
  4 mm to 50 mm (ceramic)
- Nominal size increment
  0.01 mm (up to 45 mm)
  0.02 mm (over 45 mm)

- Used for quick and accurate setting of dial bore gages, Holtest, and inside micrometers.
- Actual diameter is marked in 0.001 mm increments. (Dimension measuring position is the center of the height T.)

Steel Setting Rings



177-300

CERA Setting Rings



177-432

C

DIMENSIONS

Unit: mm

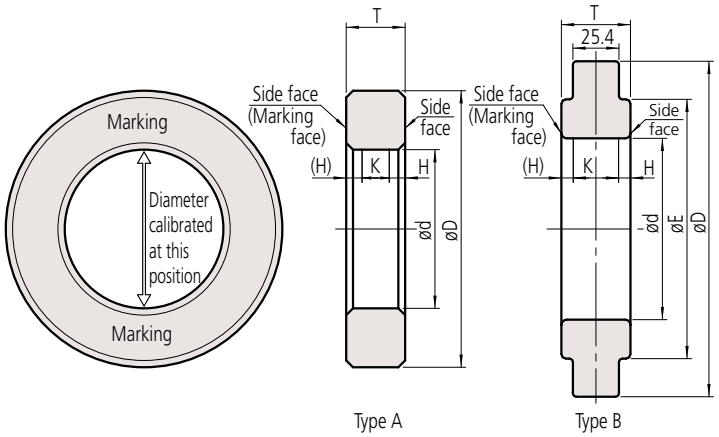

Suffix

177-*-62**: With Inspection Certificate (provides a record of the calibrated diameter) and Calibration Certificate

177-*-82**: With Inspection Certificate (provides a record of the calibrated diameter), Calibration Certificate, and Traceability System Chart

Note 1: The Inspection Certificate is not a substitute for a calibration certificate as it is undated.
Note 2: A more detailed inspection certificate describing roundness and cylindricity is available on request.

Mitutoyo reserves the right to change any or all aspects of any product specification, including prices, designs and service content, without notice.

Setting Rings
SERIES 177 — Accessories for Inside Micrometers, Holtest and Dial Bore Gages

SPECIFICATIONS

Steel Setting Rings

Metric

Order No.	Nominal size ød (mm)	Dimensions (mm)			Type	Accuracy				
		øD	øE	T		Tolerance between the nominal size and the actual diameter (µm)	Uncertainty of marked diameter value*1 (µm)	Roundness/ Cylindricity*2 (µm)	Distance from the side face H (mm)	Size of warranted calibration surface K (mm)
177-220	1	20	—	4	A	±10	1.5	1.0	1.6	0.8
177-222	1.1	20	—	4	A	±10	1.5	1.0	1.6	0.8
177-225	1.2	20	—	4	A	±10	1.5	1.0	1.6	0.8
177-227	1.3	20	—	4	A	±10	1.5	1.0	1.6	0.8
177-230	1.4	20	—	4	A	±10	1.5	1.0	1.6	0.8
177-236	1.75	25	—	5	A	±10	1.5	1.0	1.6	1.8
177-239	2	25	—	5	A	±10	1.5	1.0	1.6	1.8
177-242	2.25	25	—	5	A	±10	1.5	1.0	1.6	1.8
177-208	2.5	25	—	7	A	±10	1.5	1.0	1.7	3.6
177-246	2.75	25	—	7	A	±10	1.5	1.0	1.7	3.6
177-248	3	25	—	7	A	±10	1.5	1.0	1.7	3.6
177-250	3.25	25	—	7	A	±10	1.5	1.0	1.7	3.6
177-252	3.5	25	—	7	A	±10	1.5	1.0	1.7	3.6
177-255	3.75	25	—	7	A	±10	1.5	1.0	1.7	3.6
177-204	4	25	—	7	A	±10	1.5	1.0	1.7	3.6
177-257	4.5	25	—	7	A	±10	1.5	1.0	1.7	3.6
177-205	5	25	—	7	A	±10	1.5	1.0	1.7	3.6
177-263	5.5	25	—	7	A	±10	1.5	1.0	1.7	3.6
177-267	6	25	—	7	A	±10	1.5	1.0	1.7	3.6
177-271	6.5	25	—	7	A	±10	1.5	1.0	1.7	3.6
177-275	7	25	—	7	A	±10	1.5	1.0	1.7	3.6
177-125	8	32	—	10	A	±10	1.5	1.0	2.0	6.0
177-279	9	32	—	10	A	±10	1.5	1.0	2.0	6.0
177-126	10	32	—	10	A	±10	1.5	1.0	2.0	6.0
177-284	12	32	—	10	A	±10	1.5	1.0	2.0	6.0
177-132	14	38	—	10	A	±10	1.5	1.0	2.0	6.0
177-177	16	45	—	10	A	±10	1.5	1.0	2.0	6.0
177-133	17	45	—	10	A	±10	1.5	1.0	2.0	6.0
177-285	18	45	—	10	A	±10	1.5	1.0	2.0	6.0
177-286	20	45	—	10	A	±10	1.5	1.0	2.0	6.0
177-139	25	53	—	15	A	±10	1.5	1.0	3.2	8.6
177-288	30	71	—	15	A	±10	1.5	1.0	3.2	8.6
177-140	35	71	—	15	A	±10	1.5	1.0	3.2	8.6
177-290	40	71	—	15	A	±10	1.5	1.0	3.2	8.6
177-178	45	85	—	15	A	±10	1.5	1.0	3.7	7.6
177-146	50	85	—	20	A	±20	1.5	1.0	3.7	12.6
177-292	60	112	—	20	A	±20	1.5	1.0	3.7	12.6
177-314	62	112	—	20	A	±20	1.5	1.5	3.7	12.6
177-147	70	112	—	20	A	±20	1.5	1.5	3.7	12.6
177-316	75	125	—	25	A	±20	1.5	1.5	4.2	16.6
177-294	80	125	—	25	A	±20	1.5	1.5	4.2	16.6
177-318	87	140	—	25	A	±20	1.5	1.5	4.2	16.6
177-148	90	140	—	25	A	±20	1.5	1.5	4.2	16.6
177-296	100	160	—	25	A	±20	1.5	2.0	4.2	16.6
177-298	125	210	168	38.1 (25.4)	B	±20	2.5	2.0	5.3	27.5
177-300	150	235	187		B	±20	2.5	2.0	5.3	27.5
177-302	175	260	215		B	±20	2.5	2.5	5.3	27.5
177-304	200	311	244		B	±20	2.5	2.5	5.3	27.5
177-306	225	337	264		B	±20	2.5	2.5	5.3	27.5
177-308	250	362	290		B	±20	2.5	3.0	5.3	27.5
177-310	275	413	321		B	±20	2.5	3.0	5.3	27.5
177-312	300	438	340		B	±20	2.5	3.0	5.3	27.5

*1 Actual diameter is marked in 0.001 mm increments. (Dimension measuring position is the center of the height T.)
*2 Cylindricity is defined as per JIS B 0621 Definitions and designations of geometrical deviations, Section 4.4 "Cylindricity." Cylindricity is measured using three cross-sections between the top and bottom face of a ring, namely, close to the face near each side and the center.

Mitutoyo reserves the right to change any or all aspects of any product specification, including prices, designs and service content, without notice.

Inch

Order No.	Nominal size ød (in)	Dimensions (mm)			Type	Accuracy				
		øD	øE	T		Tolerance between the nominal size and the actual diameter (in)	Uncertainty of marked diameter value*1 (in)	Roundness/ Cylindricity*2 (in)	Distance from the side face H (mm)	Size of warranted calibration surface K (mm)
177-209	0.1	25	—	7	A	±0.0004	0.00006	0.00004	1.7	3.6
177-206	0.16	25	—	7	A	±0.0004	0.00006	0.00004	1.7	3.6
177-207	0.24	25	—	7	A	±0.0004	0.00006	0.00004	1.7	3.6
177-281	0.275	25	—	7	A	±0.0004	0.00006	0.00004	2.0	3.0
177-179	0.35	32	—	10	A	±0.0004	0.00006	0.00004	2.0	6.0
177-283	0.425	32	—	10	A	±0.0004	0.00006	0.00004	2.0	6.0
177-180	0.5	32	—	10	A	±0.0004	0.00006	0.00004	2.0	6.0
177-181	0.6	38	—	10	A	±0.0004	0.00006	0.00004	2.0	6.0
177-182	0.65	45	—	10	A	±0.0004	0.00006	0.00004	2.0	6.0
177-183	0.7	45	—	10	A	±0.0004	0.00006	0.00004	2.0	6.0
177-287	0.8	45	—	10	A	±0.0004	0.00006	0.00004	2.0	6.0
177-184	1	53	—	15	A	±0.0004	0.00006	0.00004	3.2	8.6
177-289	1.2	71	—	15	A	±0.0004	0.00006	0.00004	3.2	8.6
177-185	1.4	71	—	15	A	±0.0004	0.00006	0.00004	3.2	8.6
177-291	1.6	71	—	15	A	±0.0004	0.00006	0.00004	3.2	8.6
177-186	1.8	85	—	15	A	±0.0004	0.00006	0.00004	3.7	7.6
177-187	2	85	—	20	A	±0.0008	0.00006	0.00004	3.7	12.6
177-293	2.4	112	—	20	A	±0.0008	0.00006	0.00004	3.7	12.6
177-315	2.5	112	—	20	A	±0.0008	0.00006	0.00006	4.2	11.6
177-188	2.8	112	—	20	A	±0.0008	0.00006	0.00006	4.2	11.6
177-317	3	125	—	25	A	±0.0008	0.00006	0.00006	4.2	16.6
177-295	3.2	125	—	25	A	±0.0008	0.00006	0.00006	4.2	16.6
177-319	3.5	140	—	25	A	±0.0008	0.00006	0.00006	4.2	16.6
177-189	3.6	140	—	25	A	±0.0008	0.00006	0.00006	4.2	16.6
177-297	4	160	—	25	A	±0.0008	0.00006	0.00008	4.2	16.6
177-299	5	210	168	38.1	B	±0.0008	0.00010	0.00008	5.3	27.5
177-301	6	235	187	38.1	B	±0.0008	0.00010	0.00008	5.3	27.5
177-303	7	260	215	38.1	B	±0.0008	0.00010	0.00010	5.3	27.5
177-305	8	311	244	38.1	B	±0.0008	0.00010	0.00010	5.3	27.5
177-307	9	337	264	38.1	B	±0.0008	0.00010	0.00010	5.3	27.5
177-309	10	362	290	38.1	B	±0.0008	0.00010	0.00012	5.3	27.5
177-311	11	413	321	38.1	B	±0.0008	0.00010	0.00012	5.3	27.5
177-313	12	438	340	38.1	B	±0.0008	0.00010	0.00012	5.3	27.5

*1 Actual diameter is marked in 0.001 mm increments. (Dimension measuring position is the center of the height T.)

*2 Cylindricity is defined as per JIS B 0621 Definitions and designations of geometrical deviations, Section 4.4 "Cylindricity." Cylindricity is measured using three cross-sections between the top and bottom face of a ring, namely, close to the face near each side and the center.

Mitutoyo reserves the right to change any or all aspects of any product specification, including prices, designs and service content, without notice.

Setting Rings
SERIES 177 — Accessories for Inside Micrometers, Holtest and Dial Bore Gages

SPECIFICATIONS
CERA Setting Rings

Metric

Order No.	Nominal size ød (mm)	Dimensions (mm)			Type	Accuracy				
		øD	øE	T		Tolerance between the nominal size and the actual diameter (µm)	Uncertainty of marked diameter value*1 (µm)	Roundness/ Cylindricity*2 (µm)	Distance from the side face H (mm)	Size of warranted calibration surface K (mm)
177-418	4	25	—	7	A	±10	1.5	1.0	1.7	3.6
177-420	6	25	—	7	A	±10	1.5	1.0	1.7	3.6
177-423	8	32	—	10	A	±10	1.5	1.0	2.0	6.0
177-424	10	32	—	10	A	±10	1.5	1.0	2.0	6.0
177-425	12	32	—	10	A	±10	1.5	1.0	2.0	6.0
177-427	16	45	—	10	A	±10	1.5	1.0	2.0	6.0
177-429	20	45	—	10	A	±10	1.5	1.0	2.0	6.0
177-430	25	53	—	15	A	±10	1.5	1.0	3.2	8.6
177-431	30	71	—	15	A	±10	1.5	1.0	3.2	8.6
177-432	35	71	—	15	A	±10	1.5	1.0	3.2	8.6
177-433	40	71	—	15	A	±10	1.5	1.0	3.2	8.6
177-434	45	85	—	15	A	±10	1.5	1.0	3.7	7.6

Inch

Order No.	Nominal size ød (in)	Dimensions (mm)			Type	Accuracy				
		øD	øE	T		Tolerance between the nominal size and the actual diameter (in)	Uncertainty of marked diameter value*1 (in)	Roundness/ Cylindricity*2 (in)	Distance from the side face H (mm)	Size of warranted calibration surface K (mm)
177-518	0.16	25	—	7	A	±0.0004	0.00006	0.00004	1.7	3.6
177-520	0.24	25	—	7	A	±0.0004	0.00006	0.00004	1.7	3.6
177-522	0.275	25	—	7	A	±0.0004	0.00006	0.00004	1.7	3.6
177-523	0.35	32	—	10	A	±0.0004	0.00006	0.00004	2.0	6.0
177-524	0.425	32	—	10	A	±0.0004	0.00006	0.00004	2.0	6.0
177-525	0.5	32	—	10	A	±0.0004	0.00006	0.00004	2.0	6.0
177-527	0.65	45	—	10	A	±0.0004	0.00006	0.00004	2.0	6.0
177-529	0.8	45	—	10	A	±0.0004	0.00006	0.00004	2.0	6.0
177-530	1	53	—	15	A	±0.0004	0.00006	0.00004	3.2	8.6
177-531	1.2	71	—	15	A	±0.0004	0.00006	0.00004	3.2	8.6
177-532	1.4	71	—	15	A	±0.0004	0.00006	0.00004	3.2	8.6
177-533	1.6	71	—	15	A	±0.0004	0.00006	0.00004	3.2	8.6
177-534	1.8	85	—	15	A	±0.0004	0.00006	0.00004	3.7	7.6

*1 Actual diameter is marked in 0.001 mm increments. (Dimension measuring position is the center of the height T.)
*2 Cylindricity is defined as per JIS B 0621 Definitions and designations of geometrical deviations, Section 4.4 "Cylindricity." Cylindricity is measured using three cross-sections between the top and bottom face of a ring, namely, close to the face near each side and the center.

Mitutoyo reserves the right to change any or all aspects of any product specification, including prices, designs and service content, without notice.

Inside Micrometers

Nomenclature (Holtest)

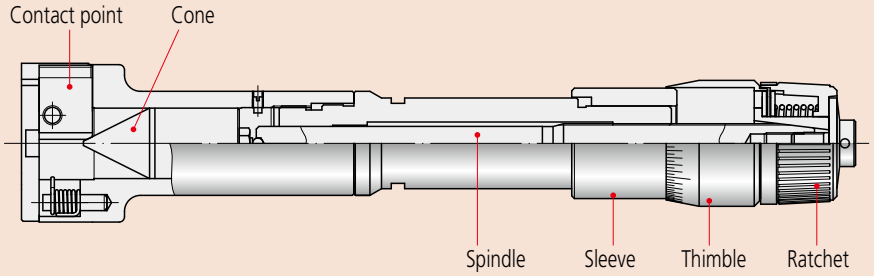

Custom-ordered Products (Holtest / Boremetic)

Mitutoyo can custom-build an inside micrometer best suited to your special application. Please feel free to contact Mitutoyo about the possibilities - even if only one custom-manufactured piece is required. Please note that, depending on circumstances, such a micrometer will usually need to be used with a master setting ring for accuracy assurance. (A custom-ordered micrometer can be made compatible with a master ring supplied by the customer. Please consult Mitutoyo.)

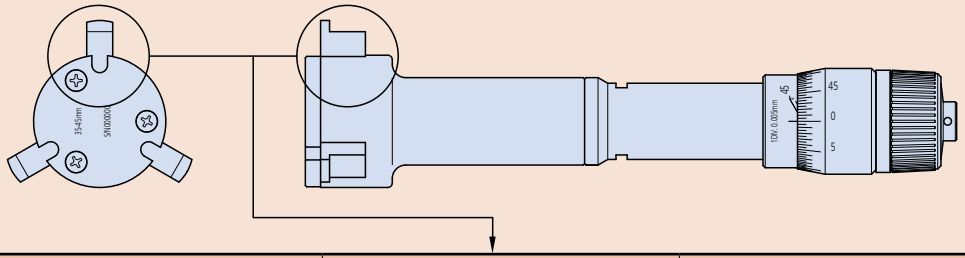

Type of feature	Workpiece profile (example)	Contact point tip profile (example)	Remarks
Square groove	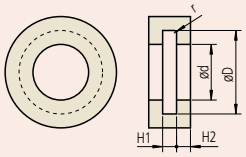	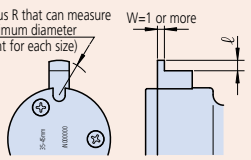	• Allows measurement of the diameter of variously shaped inside grooves and splines. • Minimum measurable groove diameter is approximately 16 mm (differs depending on the workpiece profile.) • Dimension ℓ should be as follows: For W=less than 2 mm: ℓ=less than 2 mm For W=2 mm or more: ℓ=2 mm as the standard value which can be modified according to circumstances. • The number of splines or serrations is limited to a multiple of 3. • Details of the workpiece profile should be provided at the time of placing a custom-order. • If your application needs a measuring range different from that of the standard inside micrometer an additional initial cost for the master ring gage will be required.
Round groove	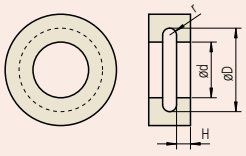	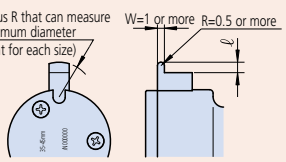	
Spline	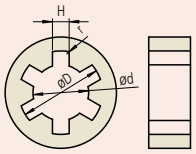	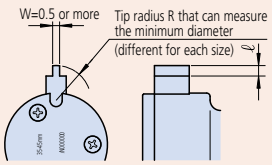	
Serration	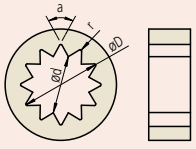	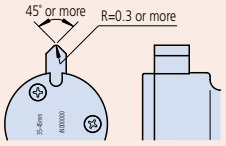	
Threaded hole	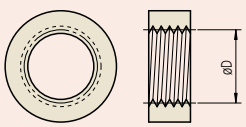	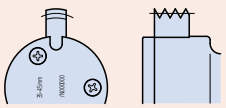	• Allows measurement of the effective diameter of an internal thread. • Measurable internal threads are restricted according to the type, nominal dimension, and pitch of the thread. Please contact Mitutoyo with the specification of the thread to be measured for advice.

How to Read the Scale

Graduation 0.005 mm

(1) Outer sleeve	35	mm
(2) Thimble	0.015	mm
Reading	35.015	mm

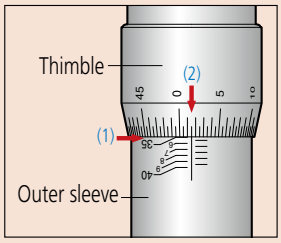

Changes in measured values at different measuring points

The accuracy of a Holtest is maximized if the same part of the anvils is used for measurement as was used for standardizing the instrument with a setting ring.

When you use the tip of the anvil for measurement, adjust the datum point using the tip of the anvil.

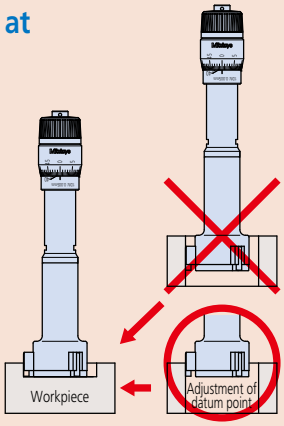

Measurement error due to temperature effects on an inside micrometer

The accuracy of an inside micrometer is degraded if its temperature is significantly different from. To help prevent this situation occurring wear gloves and only hold the micrometer by the heat insulators to reduce the transfer of heat from the operator's hands.

Effect of misalignment on accuracy (Inside Micrometer)

Figure 1

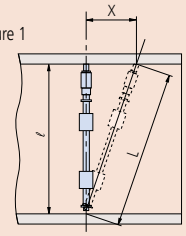

ℓ: Inside diameter to be measured
L: Length measured with axial offset X
X: Offset in axial direction
△ℓ: Error in measurement
△ℓ: $L-\ell=\sqrt{\ell^2+X^2}-\ell$

Figure 2

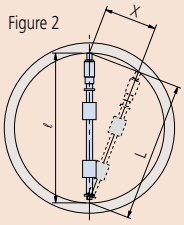

ℓ: Inside diameter to be measured
L: Length measured with radial offset X
X: Offset in radial direction
△ℓ: Error in measurement
△ℓ: $L-\ell=\sqrt{\ell^2-X^2}-\ell$

If the Inside Micrometer is misaligned in the axial or radial direction by an offset distance X when a measurement is taken, as in Figures 1 and 2, then that measurement will be in error as shown in the graph below (constructed from the formulae given above). The error is positive for axial misalignment and negative for radial misalignment.

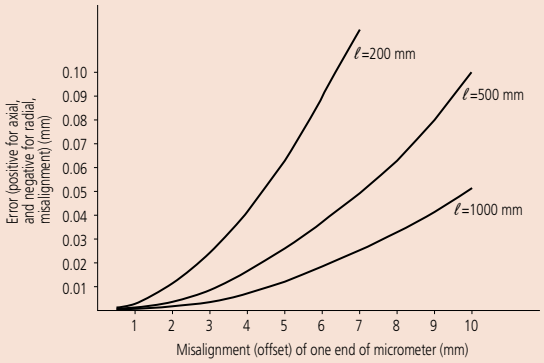

Airy and Bessel Points

When a length standard bar or inside micrometer lies horizontally, supported as simply as possible at two points, it bends under its own weight into a shape that depends on the spacing of those points. There are two distances between the points that control this deformation in useful ways, as shown below.

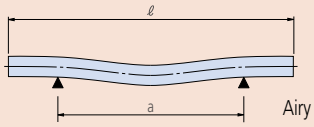

Airy points (a≒0.577ℓ)

The ends of a bar (or micrometer) can be made exactly horizontal by spacing the two supports symmetrically as shown above. These points are known as the 'Airy Points' and are commonly used to ensure that the ends of a length bar are parallel to one another, so that the length is well defined.

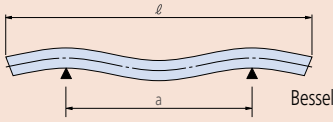

Bessel points (a≒0.559ℓ)

The change in length of a bar (or micrometer) due to bending can be minimized by spacing the two supports symmetrically as shown above. These points are known as the 'Bessel Points' and may be useful when using a long inside micrometer.

Reference point setting (2-point gages)

- Reference point setting with a ring gage or cylinder master gage
  Insert the bore gage into the ring gage, vertically or horizontally swing the bore gage, and set the zero point to the point where the indicator reads the maximum value. (Rotate the dial face for a dial gage and perform presetting or zero setting for a Digimatic indicator.)
- Reference point setting with outside micrometer and gauge block
  Hold a gauge block (of the reference dimension) between a micrometer's measuring faces as if measuring the block. Clamp the micrometer's spindle and then pull out the gauge block. Insert the bore gage between the micrometer's measuring faces. Maneuver the bore gage to the position where the indicator reads a minimum and then set the pointer to read zero (or a preset value required) by rotating the bezel.
- Reference point setting with outside micrometer only
  Fix the micrometer in a vertical attitude with its head side (spindle side) downward (see illustration below), and then adjust the distance between the measuring faces to the reference dimension. At this time, do not clamp the micrometer spindle. Insert the bore gage between the micrometer's measuring faces. Maneuver the bore gage to the position where the indicator reads a minimum and then set the pointer to read zero (or a preset value required) by rotating the bezel. Zero-setting with a micrometer requires a certain degree of dexterity because no self-centering action is available, as is the case when using a setting gage.
  Zero-setting is also possible by performing the same procedure using the gauge block, height master, or bore gage zero checker in addition to the outside micrometer.

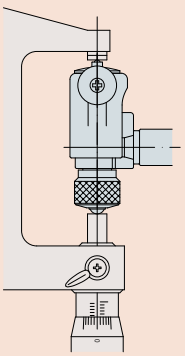

C

Mitutoyo

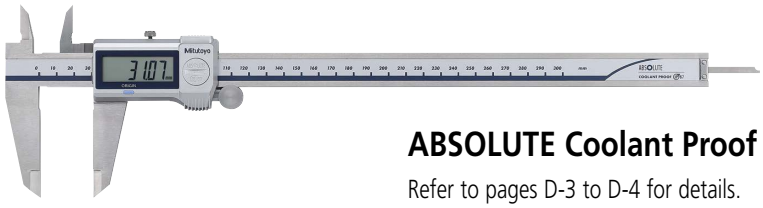

ABSOLUTE Coolant Proof Caliper

Refer to pages D-3 to D-4 for details.

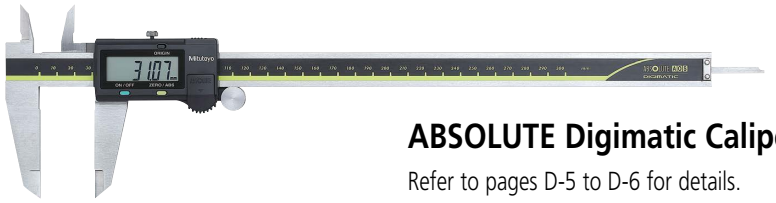

ABSOLUTE Digimatic Caliper

Refer to pages D-5 to D-6 for details.

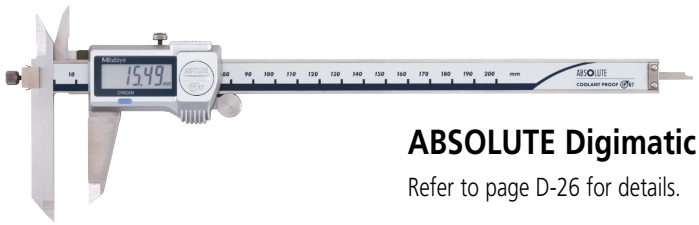

ABSOLUTE Digimatic Offset Caliper

Refer to page D-26 for details.



High-Performance Height Gage QM-Height

Refer to pages D-61 to D-62 for details.

D

Small Tool Instruments
Calipers
Height Gages
Depth Gages

MeasurLink® ENABLED
Data Management Software by Mitutoyo

Measurement Data Network System

MeasurLink® is a measurement data management system based on databases (SQL Server). You can build a network to manage the measurement results and measuring machines by simply combining the functions necessary for your purpose.

MeasurLink® is a registered trademark of Mitutoyo Corporation in Japan and Mitutoyo America Corporation in the United States.

U-WAVE fit

Measurement Data Wireless Communication System

Bluetooth® communication enables wireless transfer of measurement data from digimatic micrometers and callipers to PCs, smartphones, tablets and such other devices.

IP67

IP Codes

These are codes that indicate the degree of protection provided (by an enclosure) for the electrical function of a product against the ingress of foreign bodies, dust and water as defined in IEC standards (IEC 60529: 2001) and JIS C 0920: 2003.
(Refer to page IX)

TÜVRheinland CERTIFIED
Dust- and Water-Protected
www.tuv.com ID 0000040191

TÜV Rheinland Certification Marks

All products with the marks have passed the IP test carried out by the German accreditation organization, TÜV Rheinland.

PROPRIETARY INSPECTION CERTIFICATE

Measuring Instruments Shipped with Inspection Certificate

Mitutoyo guarantees product quality as a leading precision measuring instrument manufacturer and ships measuring instruments with an inspection certificate that includes inspection data so that customers can use them with confidence.

ABSOLUTE™

ABSOLUTE Linear Encoder

Mitutoyo developed the unique absolute method to retain position information after the power is turned off.
The origin is set once - thereafter the live position is displayed when the power is turned on.

INDEX

Digimatic Calipers

ABSOLUTE Coolant Proof Caliper	D-3
ABSOLUTE Digimatic Caliper	D-5
Long ABSOLUTE Digimatic Caliper	D-7

Calipers

Vernier Caliper	D-8
Vernier Caliper (Fine Adjustment)	D-10
Vernier Caliper (Thumb Grip)	D-11
ABSOLUTE Digimatic Caliper (Nib Style Jaws)	D-12
ABSOLUTE Digimatic Caliper (Nib Style, Standard Jaws)	D-13
Dial Caliper	D-14
ABSOLUTE Coolant Proof Carbon Fiber Caliper (with Standard Jaws)	D-15
ABSOLUTE Coolant Proof Carbon Fiber Caliper (with Long Jaws)	D-17
ABSOLUTE Coolant Proof Carbon Fiber Caliper (with Ceramic Jaws)	D-18
ABSOLUTE Coolant Proof Carbon Fiber Caliper (with Interchangeable Jaws)	D-19
Vernier Caliper (Nib Style Jaws)	D-22
Long Jaw Vernier Caliper	D-24
Offset Caliper	D-26
Offset Centerline Caliper	D-28
ABSOLUTE Back-Jaw Centerline Caliper	D-30
Point Caliper	D-31
Blade Type Caliper	D-32
ABSOLUTE Inside Caliper	D-33
Neck Caliper	D-37
Tube Thickness Caliper	D-38
Hook Type Vernier Caliper	D-39
Swivel Vernier Caliper	D-39
ABSOLUTE Low Force Caliper	D-40
ABSOLUTE Snap Caliper	D-41
Quick Guide to Precision Measuring Instruments	D-42

Digimatic Height Gage

Digimatic Height Gage	D-49
ABSOLUTE Digimatic Height Gage (with Ergonomic Base)	D-51
ABSOLUTE Digimatic Height Gage	D-52

Height Gage

Vernier Height Gage	D-53
Dial Height Gage	D-55
CERA Caliper Checker	D-56
Optional accessories	D-57

High Precision Height Gage

Linear Height	D-59
QM-Height	D-61
Quick Guide to Precision Measuring Instruments	D-63

Depth Gage

Depth Micrometer	D-66
Depth Micro Checker	D-68
ABSOLUTE Digimatic Depth Gage (SERIES 571)	D-69
Vernier Depth Gage	D-71
Depth Gage	D-72
Mini Depth Gage	D-75
Optional accessory (for Depth Gage)	D-76
Depth Gage Attachment	D-76
Dial Depth Gage (SERIES 7)	D-77
ABSOLUTE Digimatic Depth Gage (SERIES 547)	D-79
Quick Guide to Precision Measuring Instruments	D-80

Mitutoyo

ABSOLUTE Coolant Proof Caliper
SERIES 500 — with Dust/Water Protection Conforming to IP67 Level

- Can be used in workshop conditions exposed to coolant, water, dust or oil. 100% air-leak test ensures every caliper conforms to IP67.
- Incorporates Mitutoyo's ABSOLUTE measurement system. No need to reset the origin.
- Easy to use — advanced ergonomic design uses only 1 button.
- Battery cap does not require a screw driver for battery replacement.
- Can be integrated into statistical process control and measurement systems. (Refer to page A-3.)

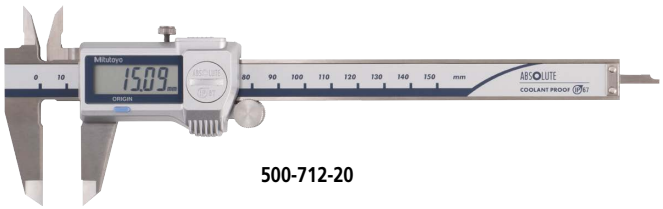

500-712-20

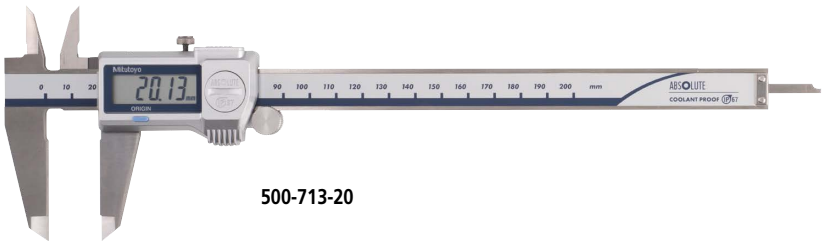

500-713-20

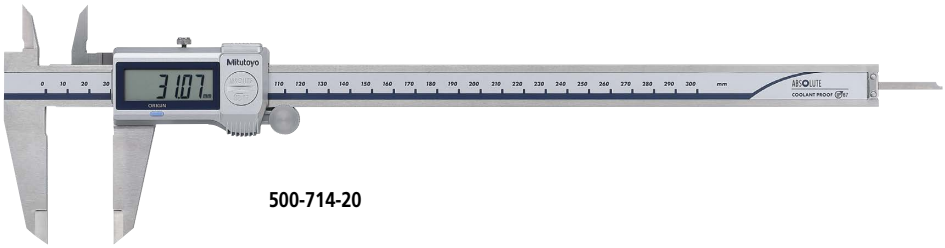

500-714-20

MeasurLink® ENABLED
Data Management Software by Mitutoyo

U-WAVE fit

ABSOLUTE™

IP67

Dust- and Water-Protected
TÜVRheinland CERTIFIED
www.tuv.com ID 0000045042

PROPRIETARY INSPECTION CERTIFICATE

Functions

Origin-set
Data output
Note: See SPECIFICATIONS for items without SPC data output.
Automatic power on/off
Alarm

Optional Accessories

(Note: Usable only for models with SPC data output. Refer to page A-21 for details.)

Order No.	Type	Description
05CZA624	A	Connecting cables for **IT/DP/MUX** (1 m)*1
05CZA625	A	Connecting cables for **IT/DP/MUX** (2 m)*1
06AFM380A	A	USB Input Tool Direct (2 m)
02AZD730G	IP67	**U-WAVE-T***2
02AZD880G	Buzzer	**U-WAVE-T***2
264-620	IP67	**U-WAVE-TC***2
264-621	Buzzer	**U-WAVE-TC***2
264-624	IP67	**U- WAVE-TCB** Transmitter*2
264-625	Buzzer	**U- WAVE-TCB** Transmitter*2
02AZF310	IP67	Connecting unit for **U-WAVE-TC/TCB**

*1 Cannot be used for other than water resistant type Digital calipers with external output function.
*2 IP67 model is water/dust-proofed suitable for the factory floor. Buzzer type is not water/dust-proofed.

Smooth slider movement makes for comfortable operation.

High quality guide surface finish for smooth slider movement

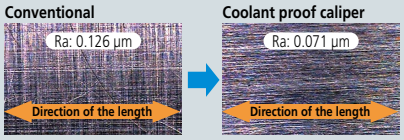

D

Mitutoyo reserves the right to change any or all aspects of any product specification, including prices, designs and service content, without notice.

LCD



Remarkably easy to read display

IP67 protection level



SPECIFICATIONS

Metric

Order No.	Range (mm)	Resolution (mm)	Maximum permissible error (mm)*1 E_{MPE}	Maximum permissible error (mm)*1 S_{MPE}	Measurement data output port	Mass (g)	Thumb roller	Remarks
500-702-20*3	0 - 150	0.01	±0.02	±0.04	—	168	✓	—
500-703-20*3	0 - 200					198		
500-706-20*3	0 - 150					168	—	
500-707-20*3	0 - 200					198		
500-716-20	0 - 150				✓	168		
500-717-20	0 - 200					198		
500-712-20	0 - 150					168		
500-713-20	0 - 200					198		
500-719-20	0 - 150					168		Depth bar ø1.9 mm
500-721-20	0 - 150					168	✓	Carbide-tipped jaws for outside measurement
500-722-20	0 - 200					198		
500-723-20	0 - 150					168		Carbide-tipped jaws for outside and inside measurement
500-724-20	0 - 200					198		
500-714-20	0 - 300		±0.03	±0.05	✓	350	✓	—
500-718-20						345	—	
500-704-20*3					—	350	✓	
500-708-20*3						345	—	

Inch / Metric

Order No.	Range	Resolution	Maximum permissible error*1 E_{MPE}	Maximum permissible error*1 S_{MPE}	Measurement data output port	Mass (g)	Thumb roller	Remarks
500-731-20*3	0 - 6 in/0 - 150 mm	0.0005 in/ 0.01 mm	±0.001 in/ ±0.02 mm	±0.002 in/ ±0.04 mm	—	168	✓	Carbide-tipped jaws for outside measurement
500-732-20*3	0 - 8 in/0 - 200 mm					198		
500-733-20*3	0 - 6 in/0 - 150 mm					168		Carbide-tipped jaws for outside and inside measurement
500-734-20*3	0 - 8 in/0 - 200 mm					198		
500-735-20	0 - 6 in/0 - 150 mm				✓	168		Carbide-tipped jaws for outside measurement
500-736-20	0 - 8 in/0 - 200 mm					198		
500-737-20	0 - 6 in/0 - 150 mm					168		Carbide-tipped jaws for outside and inside measurement
500-738-20	0 - 8 in/0 -200 mm					198		
500-752-20*3	0 - 6 in/0 - 150 mm				—	168		—
500-753-20*3	0 - 8 in/0 - 200 mm					198		
500-762-20	0 - 6 in/0 - 150 mm				✓	168		
500-763-20	0 - 8 in/0 - 200 mm					198		
500-768-20*3	0 - 6 in/0 - 150 mm				—	168		Depth bar ø1.9 mm
500-769-20					✓	168		Depth bar ø1.9 mm
500-764-20	0 - 12 in/0 - 300 mm		±0.0015 in/ ±0.03 mm	±0.0025 in/ ±0.05 mm	✓	350	✓	—
500-754-20*3					—	350		

- Dust/Water protection level: IP67 (IEC60529)*2
- Battery: SR44 (1 pc.), **938882**, for initial operational checks (standard accessory)
- Scale type: ABSOLUTE electromagnetic induction linear encoder
- Battery life: Approx. 5 years under normal use
- Max. response speed: Unlimited

*1 Partial Surface Contact Error, E_{MPE} and Shift Error, S_{MPE} are terms (notations) used in ISO 13385-1:2019.
*2 Although these models are IP67 rated, care should be taken to dry tool after use.
*3 Without SPC data output.

DIMENSIONS

Unit: mm

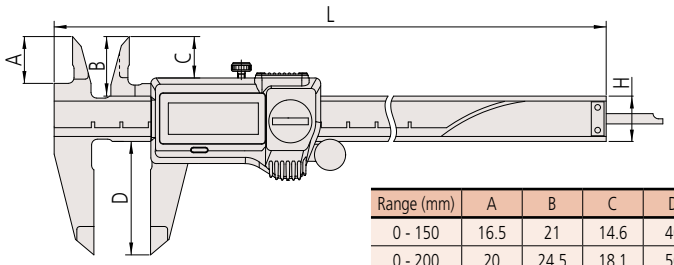

Range (mm)	A	B	C	D	H	L
0 - 150	16.5	21	14.6	40	16	233
0 - 200	20	24.5	18.1	50		290
0 - 300	22	27.5	19.8	64	20	404

Outside jaw thickness = 3.5 mm for 0 to 150 mm/0 to 200 mm models
3.8 mm for 0 to 300 mm model

Mitutoyo reserves the right to change any or all aspects of any product specification, including prices, designs and service content, without notice.

ABSOLUTE Digimatic Caliper
SERIES 500 — with exclusive ABSOLUTE Encoder Technology

- The ZERO/ABS button allows the display to be Zero-Set at any slider position along the scale. In addition, no overspeed-errors will occur.
- Carbide-tipped jaw calipers are optimal for rough finished parts, castings, grinding stones, etc.
- Allows integration into statistical process control and measurement systems for models with measurement data output connector. (Refer to page A-3.)



500-151-30



500-182-30

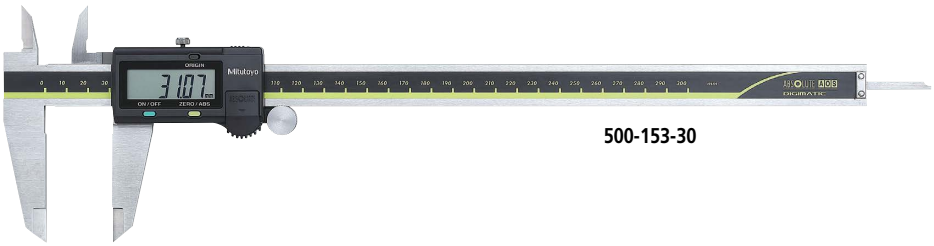

500-153-30

D

SPECIFICATIONS

Metric

Order No.	Range (mm)	Resolution (mm)	Maximum permissible error (mm)*2 E_{MPE}	Maximum permissible error (mm)*2 S_{MPE}	Mass (g)	Depth bar	Fine adjustment	Remarks
500-150-30	0 - 100	0.01	±0.02	±0.04	143	ø1.9 mm rod	with thumb roller	—
500-180-30*1							—	
500-151-30	0 - 150				168	Blade	with thumb roller	
500-154-30								Carbide-tipped jaws for outside measurement
500-155-30								Carbide-tipped jaws for outside and inside measurement
500-158-30						ø1.9 mm rod		—
500-181-30*1						Blade	—	
500-152-30	0 - 200				198		with thumb roller	
500-156-30								Carbide-tipped jaws for outside measurement
500-157-30								Carbide-tipped jaws for outside and inside measurement
500-182-30*1							—	—
500-153-30	0 - 300		±0.03	±0.05	350		with thumb roller	

- Battery: SR44 (1 pc.), **938882**, for initial operational checks (standard accessory)
- Scale type: ABSOLUTE electromagnetic induction linear encoder
- Battery life: Approx. 5 years under normal use
- Max. response speed: Unlimited

*1 Without SPC data output
*2 Partial Surface Contact Error, E_{MPE} and Shift Error, S_{MPE} are terms (notations) used in ISO 13385-1:2019.

MeasurLink® ENABLED
Data Management Software by Mitutoyo

U-WAVE fit

ABSOLUTE™

PROPRIETARY INSPECTION CERTIFICATE

Functions

Absolute measurement
Incremental measurement
Low-voltage alert
Data output
Note: See SPECIFICATIONS for excluded items.
Data hold

Optional Accessories

(Note: Usable only for models with SPC data output. Refer to page A-21 for details.)

Order No.	Type	Description
959149	C	Connecting cables for **IT/DP/MUX** (1 m)
959150	C	Connecting cables for **IT/DP/MUX** (2 m)
06AFM380C	C	USB Input Tool Direct (2 m)
02AZD790C	C	Connecting cables for **U-WAVE-T** (160 mm)
02AZE140C	C	Connecting cables for **U-WAVE-T** For foot switch
264-621	Buzzer	**U-WAVE-TC**
264-625	Buzzer	**U-WAVE-TCB**
02AZF300	Buzzer	Connecting unit for **U-WAVE-TC/TCB**

- **Data hold unit**



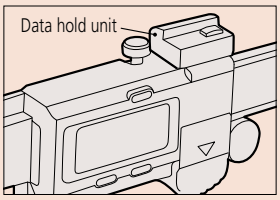

959143

Mitutoyo reserves the right to change any or all aspects of any product specification, including prices, designs and service content, without notice.

Inch / Metric

Order No.	Range	Resolution	Maximum permissible error*2 E_{MPE}	Maximum permissible error*2 S_{MPE}	Mass (g)	Depth bar	Fine adjustment	Remarks
500-170-30	0 - 4 in/ 0 - 100 mm	0.0005 in/ 0.01 mm	±0.001 in/ ±0.02 mm	±0.002 in/ ±0.04 mm	143	ø0.075 inch rod	with thumb roller	—
500-195-30*1								
500-171-30	0 - 6 in/ 0 - 150 mm				168	Blade		Carbide-tipped jaws for outside measurement
500-174-30								Carbide-tipped jaws for outside and inside measurement
500-175-30								—
500-178-30						ø0.075 inch rod		Carbide-tipped jaws for outside measurement
500-196-30*1								Carbide-tipped jaws for outside and inside measurement
500-159-30*1								—
500-160-30*1								Carbide-tipped jaws for outside measurement
500-172-30	0 - 8 in/ 0 - 200 mm				198	Blade		Carbide-tipped jaws for outside and inside measurement
500-176-30								—
500-177-30								Carbide-tipped jaws for outside measurement
500-197-30*1								Carbide-tipped jaws for outside and inside measurement
500-163-30*1								—
500-164-30*1								Carbide-tipped jaws for outside measurement
500-173-30	0 - 12 in/ 0 - 300 mm		±0.0015 in/ ±0.03 mm	±0.0025 in/ ±0.05 mm	350			Carbide-tipped jaws for outside and inside measurement
500-167-30								—
500-168-30								Carbide-tipped jaws for outside measurement
500-193-30*1								Carbide-tipped jaws for outside and inside measurement
500-165-30*1								—
500-166-30*1								Carbide-tipped jaws for outside measurement
								Carbide-tipped jaws for outside and inside measurement

- Battery: SR44 (1 pc.), **938882**, for initial operational checks (standard accessory)
- Scale type: ABSOLUTE electromagnetic induction linear encoder
- Battery life: Approx. 5 years under normal use
- Max. response speed: Unlimited

*1 Without SPC data output

*2 Partial Surface Contact Error, E_{MPE} and Shift Error, S_{MPE} are terms (notations) used in ISO 13385-1:2019.

DIMENSIONS

Unit: mm

With thumb roller

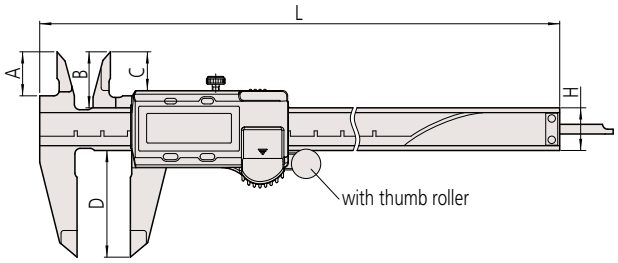

Without thumb roller

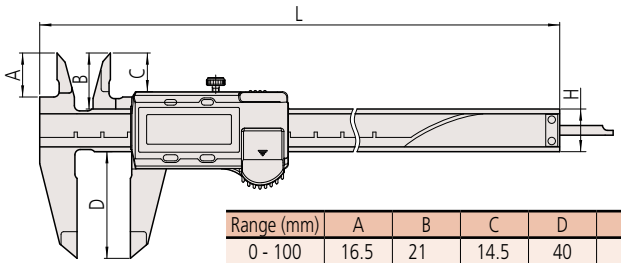

Range (mm)	A	B	C	D	H	L
0 - 100	16.5	21	14.5	40	16	182
0 - 150	16.5	21	14.5	40	16	233
0 - 200	20	24.5	18	50	16	290
0 - 300	22	27.5	19.8	64	20	404

Jaw thickness: 3.5 mm for 0 to 100 mm/0 to 150 mm/0 to 200 mm models and 3.8 mm for 0 to 300 mm model

D

MeasurLink® ENABLED
Data Management Software by Mitutoyo

ABSOLUTE™

Long ABSOLUTE Digimatic Caliper
SERIES 500 — with Exclusive ABSOLUTE Encoder Technology

- Long Digital caliper incorporating an ABSOLUTE scale and available with a measuring range from 450 mm to 1000 mm.
- Allows integration into statistical process control and measurement systems for models with measurement data output connector. (Refer to page A-3.)

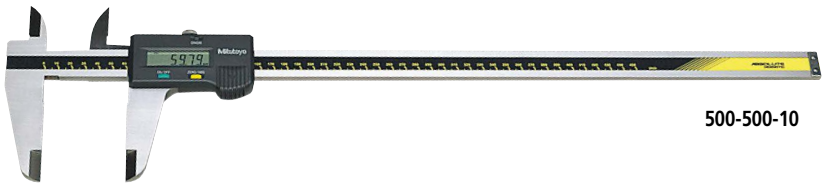

500-500-10

SPECIFICATIONS

Metric

Order No.	Range (mm)	Maximum permissible error (mm)*		Resolution (mm)	Mass (g)
		E_{MPE}	S_{MPE}		
500-500-10	0 - 450	±0.05	±0.07	0.01	1170
500-501-10	0 - 600	±0.05	±0.07		1350
500-502-10	0 - 1000	±0.07	±0.09		3300

Inch/Metric

Order No.	Range	Maximum permissible error*		Resolution	Mass (g)
		E_{MPE}	S_{MPE}		
500-505-10	0 - 18 in/0 - 450 mm	±0.002 in/±0.05 mm	±0.003 in/±0.07 mm	0.0005 in/0.01 mm	1170
500-506-10	0 - 24 in/0 - 600 mm				1350
500-507-10	0 - 40 in/0 - 1000 mm	±0.003 in/±0.07 mm	±0.004 in/±0.09 mm		3300

- Battery: SR44 (1 pc.), **938882**, for initial operational checks (standard accessory)
- Battery life: Approx. 3.5 years under normal use
- Max. response speed: Unlimited

* Partial Surface Contact Error, E_{MPE} and Shift Error, S_{MPE} are terms (notations) used in ISO 13385-1:2019.

DIMENSIONS

Unit: mm

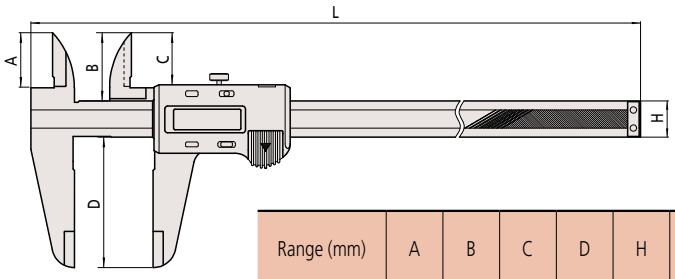

Range (mm)	A	B	C	D	H	L	Outside jaw width
0 - 450	38	47	35.9	90	25	630	6
0 - 600						780	
0 - 1000	50	60	49.8	130	32	1240	8

Optional Accessories

Order No.	Type	Description
959149	C	Connecting cables for **IT**/**DP**/**MUX** (1 m)
959150	C	Connecting cables for **IT**/**DP**/**MUX** (2 m)
06AFM380C	C	USB Input Tool Direct (2 m)
02AZD790C	C	Connecting cables for **U-WAVE-T** (160 mm)
02AZE140C	C	Connecting cables for **U-WAVE-T**

- **Data hold unit**



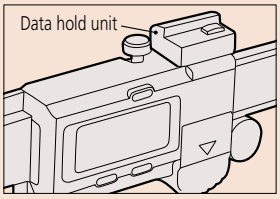

959143

D

Mitutoyo reserves the right to change any or all aspects of any product specification, including prices, designs and service content, without notice.

Vernier Caliper
SERIES 530 — Standard model

- Stepped graduation face prevents dust ingress between the main scale and slider.
- The small vernier face angle (14°) provides easy reading.
- Can measure steps, since the end faces of the beam and slider are the zero reference point (measuring face). Standard calipers allow four types of measurement, i.e. outside, inside, depth, and step.
- Carbide-tipped jaw calipers are optimal for rough finished parts, castings, grinding stones, etc.

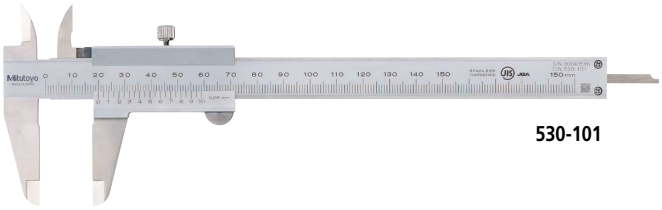

530-101

Measurement example

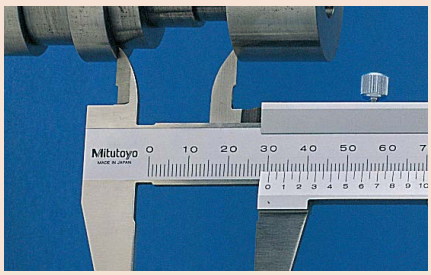

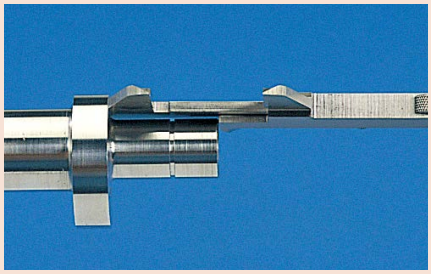

Round depth bar type

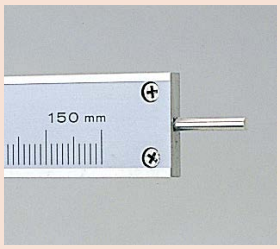

530-102

Carbide-tipped jaws for outside measurement



530-320

SPECIFICATIONS

Metric

Order No.	Range (mm)	Maximum permissible error (mm)*1 • E_{MPE} (outside measurement) • S_{MPE} (inside measurement)	Depth bar	Graduation (mm)	Remarks
530-101	0 - 150	±0.05	Blade	0.05	—
530-122		±0.03		0.02	High accuracy model
530-108	0 - 200	±0.05		0.05	—
530-123		±0.03		0.02	High accuracy model
530-109	0 - 300	±0.08		0.05	—
530-124		±0.04		0.02	High accuracy model

Order No.	Range (mm)	Maximum permissible error (mm)*2 E_{MPE}	Maximum permissible error (mm)*2 S_{MPE}	Depth bar	Graduation (mm)	Remarks
530-100	0 - 100	±0.05	±0.07	ø1.9 mm rod	0.05	—
530-102	0 - 150	±0.05	±0.07			—
530-320		±0.05	±0.07	Blade		Carbide-tipped jaws for outside measurement
530-335		±0.05	±0.07			Carbide-tipped jaws for outside and inside measurement
530-321	0 - 200	±0.05	±0.07			Carbide-tipped jaws for outside measurement
530-322	0 - 300	±0.08	±0.10			Carbide-tipped jaws for outside measurement
530-501	0 - 600	±0.10	±0.12	—		—
530-502	0 - 1000	±0.15	±0.17			

Metric/Inch with metric/inch double scale

Order No.	Range	Maximum permissible error E_{MPE}	Maximum permissible error S_{MPE}	Depth bar	Graduation	Remarks
530-104	0 - 150 mm/ 0 - 6 in	±0.05 mm/ ±0.5/128 in	±0.07 mm/ ±0.5/128 in	Blade	0.05 mm (1/128 in)	—
530-316						Clamping screw below the slider
530-312					0.02 mm (0.001 in)	High accuracy model: ±0.03 mm
530-114	0 - 200 mm/ 0 - 8 in				0.05 mm (1/128 in)	—
530-118					0.02 mm (0.001 in)	High accuracy model: ±0.03 mm
530-115	0 - 300 mm/ 0 - 12 in	±0.08 mm/ ±0.5/128 in	±0.010 mm/ ±0.5/128 in		0.05 mm (1/128 in)	—
530-119					0.02 mm (0.001 in)	High accuracy model: ±0.04 mm

Inch with inch/inch double scale

Order No.	Range (in)	Maximum permissible error (in) E_{MPE}	Maximum permissible error (in) S_{MPE}	Depth bar	Graduation (in)	Remarks
530-105	0 - 6	±0.5/128	±0.5/128	Blade	0.001	—
530-116	0 - 8	±0.5/128	±0.5/128			

*1 Partial Measuring Face Contact Error, E_{MPE} and Shift Error, S_{MPE} are terms (notations) used in JIS B 7507: 2016, revised based on ISO 13385-1: 2011. Refer to page D-45 for details.
*2 Partial Surface Contact Error, E_{MPE} and Shift Error, S_{MPE} are terms (notations) used in ISO 13385-1:2019.

D

Mitutoyo reserves the right to change any or all aspects of any product specification, including prices, designs and service content, without notice.

Vernier Caliper
SERIES 530 — Standard model

DIMENSIONS

Unit: mm

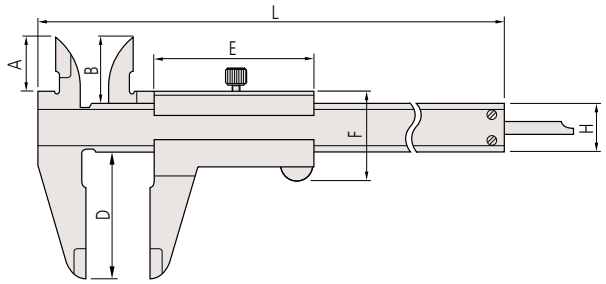

Range (mm)	A	B	D	E	F	H	L	Outside jaw thickness
0 - 100	17	21.5	40	53.5	30	16	182	3
0 - 150	17	21.5	40	53.5	30	16	229	3
0 - 200	20.5	25	50	53.5	30	16	288	3
0 - 300	22	27.5	64	66.5	36	20	404	3.8
0 - 600	38	47	90	89	50	25	780	6
0 - 1000	50	60	130	111	61	32	1240	8

Note: **530-100** and **530-102** incorporate a round depth bar (ø1.9 mm).
The depth bar shown in the illustration above is a different type.

Mitutoyo reserves the right to change any or all aspects of any product specification, including prices, designs and service content, without notice.

Vernier Caliper
SERIES 532 — with fine adjustment

- Fine-adjustment aids slider positioning.
- Allows step measurement.

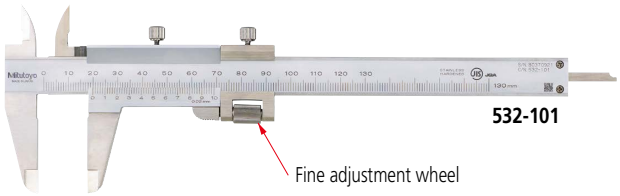

SPECIFICATIONS

Metric

Order No.	Range (mm)	Graduation (mm)	Maximum permissible error (mm)* • E_{MPE} (outside measurement) • S_{MPE} (inside measurement)	Depth bar	Remarks
532-101	0 - 130	0.02	±0.03	Blade	with fine adjustment
532-102	0 - 180		±0.03		
532-103	0 - 280		±0.04		

Metric/Inch with metric/inch double scale

Order No.	Range	Graduation	Maximum permissible error*		Depth bar	Remarks
			E_{MPE}	S_{MPE}		
532-119	0 - 130 mm/0 - 5 in	0.02 mm (0.001 in)	±0.03 mm/0.001 in	±0.05 mm/0.0015 in	Blade	with fine adjustment
532-120	0 - 180 mm/0 - 7 in					
532-121	0 - 280 mm/0 - 11 in		±0.04 mm/0.0015 in	±0.06 mm/0.0020 in		

* Partial Measuring Face Contact Error, E_{MPE} and Shift Error, S_{MPE} are terms (notations) used in JIS B 7507: 2016, revised based on ISO 13385-1: 2011. The measurement method is the same as before. Refer to page D-45 for details.

DIMENSIONS

Unit: mm

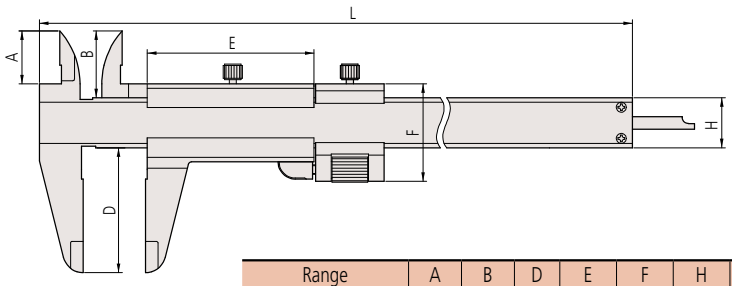

Range	A	B	D	E	F	H	L
0 - 130 mm/0 - 5 in	17	21.5	40	53.5	31.2	16	229
0 - 180 mm/0 - 7 in	20.5	25	50	53.5	31.2	16	288
0 - 280 mm/0 - 11 in	22	27.5	64	66.5	38	20	404

Jaw thickness: 3 mm for 0 to 130 mm/0 to 5 inch and 0 to 180 mm/0 to 7 inch models
3.8 mm for 0 to 280 mm/0 to 11 inch model

Mitutoyo reserves the right to change any or all aspects of any product specification, including prices, designs and service content, without notice.

Vernier Caliper
SERIES 531 — with thumb grip

- The slider moves only when the spring-loaded thumb grip is depressed.
- Allows step measurement.

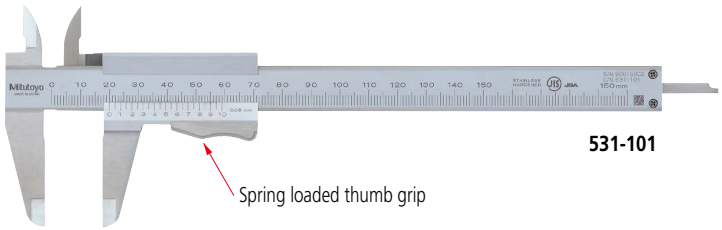

SPECIFICATIONS

Metric

Order No.	Range (mm)	Graduation (mm)	Maximum permissible error (mm)* • E_{MPE} (outside measurement) • S_{MPE} (inside measurement)	Depth bar	Remarks
531-101	0 - 150	0.05	±0.05	Blade	—
531-102	0 - 200				
531-103	0 - 300		±0.08		

Metric/Inch with metric/inch double scale

Order No.	Range	Graduation	Maximum permissible error*		Depth bar	Remarks
			E_{MPE}	S_{MPE}		
531-122	0 - 150 mm/0 - 6 in	0.05 mm (1/128 in)	±0.05 mm/±0.5/128 in	±0.07 mm/±0.5/128 in	Blade	with inch/mm conversion label
531-128		0.02 mm (0.001 in)	±0.03 mm/0.001 in	±0.05 mm/0.0015 in		High accuracy model
531-108	0 - 200 mm/0 - 8 in	0.05 mm (1/128 in)	±0.05 mm/±0.5/128 in	±0.07 mm/±0.5/128 in		—
531-129		0.02 mm (0.001 in)	±0.03 mm/0.001 in	±0.05 mm/0.0015 in		High accuracy model
531-109	0 - 300 mm/0 - 12 in	0.05 mm (1/128 in)	±0.08 mm/±0.5/128 in	±0.10 mm/±0.5/128 in		—
531-112		0.02 mm (0.001 in)	±0.04 mm/0.0015 in	±0.06 mm/0.0020 in		High accuracy model

* Partial Measuring Face Contact Error, E_{MPE} and Shift Error, S_{MPE} are terms (notations) used in JIS B 7507: 2016, revised based on ISO 13385-1: 2011. The measurement method is the same as before. Refer to page D-45 for details.

DIMENSIONS

Unit: mm

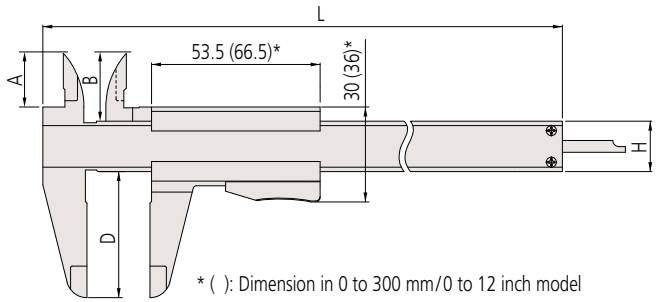

* ( ): Dimension in 0 to 300 mm/0 to 12 inch model

Range	A	B	D	H	L
0 - 150 mm/0 - 6 in	17	21.5	40	16	229
0 - 200 mm/0 - 8 in	20.5	25	50	16	288
0 - 300 mm/0 - 12 in	22	27.5	64	20	404

Jaw thickness: 3 mm for 0 to 150 mm/0 to 6 inch and 0 to 200 mm/0 to 8 inch models
3.8 mm for 0 to 300 mm/0 to 12 inch model

Mitutoyo reserves the right to change any or all aspects of any product specification, including prices, designs and service content, without notice.

MeasurLink® ENABLED Data Management Software by Mitutoyo

U-WAVE fit

ABSOLUTE™

IP67

Dust- and Water-Protected

TÜVRheinland CERTIFIED www.tuv.com ID 0000045042

Measurement example



Optional Accessories

Order No.	Type	Description
05CZA624	A	Connecting cables for **IT/DP/MUX** (1 m)*1
05CZA625	A	Connecting cables for **IT/DP/MUX** (2 m)*1
959149	C	Connecting cables for **IT/DP/MUX** (1 m)*2
959150	C	Connecting cables for **IT/DP/MUX** (2 m)*2
06AFM380A	A	USB Input Tool Direct (2 m)*1
06AFM380C	C	USB Input Tool Direct (2 m)*2
02AZD790A	A	Connecting cables for **U-WAVE-T** (160 mm)*1
02AZD790C	C	Connecting cables for **U-WAVE-T** (160 mm)*2
02AZE140A	A	Connecting cables for **U-WAVE-T***1 For foot switch
02AZE140C	C	Connecting cables for **U-WAVE-T***2 For foot switch
264-620	IP67	**U-WAVE-TC***1
264-621	Buzzer	**U-WAVE-TC***1
264-624	IP67	**U- WAVE-TCB** Transmitter*1
264-625	Buzzer	**U- WAVE-TCB** Transmitter*1
02AZF310	IP67	Connecting unit for **U-WAVE-TC/TCB***1

*1 For IP67 models (up to 300 mm)
*2 For **series 550-2XX** and **550-22X**.

ABSOLUTE Digimatic Caliper SERIES 550 — with Nib Style Jaws

- Ideal for inside diameter measurement by the rounded faces of the jaws.
- Allows integration into statistical process control and measurement systems for models with measurement data output connector. (Refer to page A-3.)
- ID measurement value: displayed value + (a compensation value displayed on the main unit). OFFSET switch allows to input a compensation value so that the measurement value can be read directly (**Order No. 550-301-20, 550-331-20, 550-311-20** and **550-341-20**). Preset function allows to set a desired starting point (**550-331-20** and **550-341-20**).



550-301-20

SPECIFICATIONS

Metric

Order No.	Range (mm)*1	Resolution (mm)	Maximum permissible error (mm)*2 E_{MPE}	Maximum permissible error (mm)*2 S_{MPE}	Remarks
550-301-20	0 - 200 (10.1 - 210)	0.01	±0.03	±0.03	IP67, with offset
550-331-20	0 - 300 (10.1 - 310)		±0.04	±0.04	IP67, with offset/preset function for easy inside measurement
550-203-10	0 - 450 (20.1 - 470)		±0.05	±0.05	—
550-205-10	0 - 600 (20.1 - 620)		±0.05	±0.05	—
550-207-10	0 - 1000 (20.1 - 1020)		±0.07	±0.07	—

Inch / Metric

Order No.	Range*1	Resolution	Maximum permissible error*2 E_{MPE}	Maximum permissible error*2 S_{MPE}	Remarks
550-311-20	0 - 8 in/0 - 200 mm (0.404 - 8.4 in/10.26 - 210.16 mm)	0.0005 in/ 0.01 mm	±0.0015 in/ ±0.03 mm	±0.0015 in/ ±0.03 mm	IP67, with offset
550-341-20	0 - 12 in/0 - 300 mm (0.404 - 12.4 in/10.26 - 310.16 mm)		±0.002 in/ ±0.04 mm	±0.002 in/ ±0.04 mm	IP67, with offset/preset function for easy inside measurement
550-223-10	0 - 18 in/0 - 450 mm (0.504 - 18.5 in/12.8 - 462.7 mm)		±0.002 in/ ±0.05 mm	±0.002 in/ ±0.05 mm	—
550-225-10	0 - 24 in/0 - 600 mm (0.504 - 24.5 in/12.8 - 612.7 mm)				—
550-227-10	0 - 40 in/0 - 1000 mm (1.004 - 41 in/25.5 - 1025.4 mm)		±0.003 in/ ±0.07 mm	±0.003 in/ ±0.07 mm	—

- Battery: SR44 (1 pc.), **938882**, for initial operational checks (standard accessory)
- Scale type: ABSOLUTE electromagnetic induction linear encoder
- Max. response speed: Unlimited

*1 ( ): Inside measurement
*2 Partial Surface Contact Error, E_{MPE} and Shift Error, S_{MPE} are terms (notations) used in ISO 13385-1:2019.
Note: **Series 550** is not equipped with a depth bar.

DIMENSIONS

Unit: mm

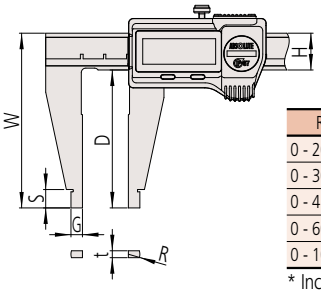

Range (mm)	D	G	S	W	H	t	R
0 - 200 (0 - 8 in)*	60	5 (5.08)*	8	76	16	3	5 (5.08)*
0 - 300 (0 - 12 in)*	75		12	95	20	3.8	
0 - 450 (0 - 18 in)*	100	10 (6.35)*	18	125	25	6	10 (6.35)*
0 - 600 (0 - 24 in)*							
0 - 1000 (0 - 40 in)*	140	10 (12.7)*	24	172	32	8	10 (12.7)*

* Inch model

D

ABSOLUTE Digimatic Caliper
SERIES 551 — with Nib Style and Standard Jaws

- Incorporates an Absolute measurement system. No need to reset the origin after switching on. (Refer to page D-3 and D-5 for details on the Absolute function.)
- **SERIES 551**: IP67 Absolute Digimatic Caliper. (Rustproofing shall be applied after use if caliper was in contact with coolant.)
- ID measurement value: displayed value + (a compensation value displayed on the main unit). OFFSET switch allows to input a compensation value so that the measurement value can be read directly (**Order No. 551-301-20, 551-331-20, 551-311-20** and **551-341-20**). Preset function allows to set a desired starting point (**Order No. 551-331-20** and **551-341-20**).
- Tips of the outside measurement jaw are relieved for easy measurement of thin parts.

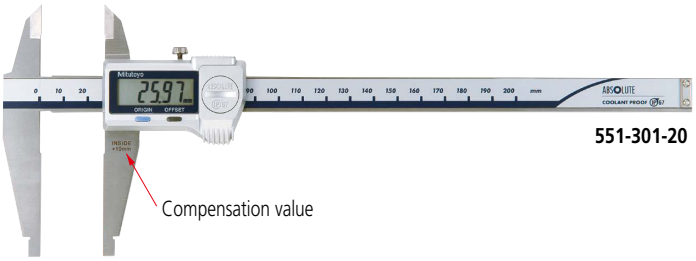

551-301-20

SPECIFICATIONS

Metric

Order No.	Range (mm)*1	Resolution (mm)	Maximum permissible error (mm)*2		Remarks
			E_{MPE}	S_{MPE}	
551-301-20	0 - 200 (10.1 - 210)	0.01	±0.03	±0.03	IP67, with offset
551-331-20	0 - 300 (10.1 - 310)		±0.04	±0.04	IP67, with offset/preset function for easy inside measurement
551-204-10	0 - 500 (20.1 - 520)		±0.06	±0.06	—
551-206-10	0 - 750 (20.1 - 770)		±0.06	±0.06	
551-207-10	0 - 1000 (20.1 - 1020)		±0.07	±0.07	

Inch/Metric

Order No.	Range*1	Resolution	Maximum permissible error*2		Remarks
			E_{MPE}	S_{MPE}	
551-311-20	0 - 8 in/0 - 200 mm (0.404 - 8.4 in/10.26 - 210.16 mm)	0.0005 in/ 0.01 mm	±0.0015 in/ ±0.03 mm	±0.0015 in/ ±0.03 mm	IP67, with offset
551-341-20	0 - 12 in/0 - 300 mm (0.404 - 12.4 in/10.26 - 310.16 mm)		±0.002 in/ ±0.04 mm	±0.002 in/ ±0.04 mm	IP67, with offset/preset function for easy inside measurement
551-224-10	0 - 20 in/0 - 500 mm (0.504 - 20.5 in/12.8 - 512.7 mm)		±0.0025 in/ ±0.06 mm	±0.0025 in/ ±0.06 mm	—
551-226-10	0 - 30 in/0 - 750 mm (0.504 - 30.5 in/12.8 - 762.7 mm				
551-227-10	0 - 40 in/0 - 1000 mm (1.004 - 40.1 in/25.5 - 1025.4 mm)		±0.003 in/ ±0.07 mm	±0.003 in/ ±0.07 mm	

- Battery: SR44 (1 pc.), **938882**, for initial operational checks (standard accessory)
- Scale type: ABSOLUTE electromagnetic induction linear encoder
- Max. response speed: Unlimited

*1 ( ): Inside measurement
*2 Partial Surface Contact Error, E_{MPE} and Shift Error, S_{MPE} are terms (notations) used in ISO 13385-1:2019.
Note: **Series 551** is not equipped with a depth bar.

DIMENSIONS

Unit: mm

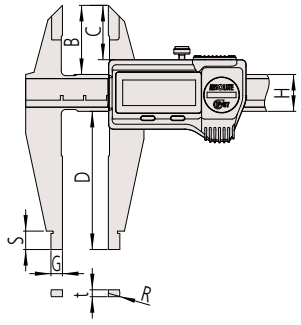

Range (mm)	B	C	D	G	S	H	t	R
0 - 200 (0 - 8 in)*	30	23.6	60	5 (5.08)*	8	16	3	5 (5.08)*
0 - 300 (0 - 12 in)*	40	32.2	90		10	20	3.8	
0 - 500 (0 - 20 in)*	56	44.9	150	10 (6.35)*	18	25	6	10 (6.35)*
0 - 750 (0 - 30 in)*	56							
0 - 1000 (0 - 40 in)*	56	43.8		10 (12.7)*	20	32	8	10 (12.7)*

* Inch model

MeasurLink® ENABLED Data Management Software by Mitutoyo
U-WAVE fit
ABSOLUTE™
IP67
Dust- and Water-Protected TÜVRheinland CERTIFIED www.tuv.com ID 0000045042

Measurement example



Optional Accessories

Order No.	Type	Description
05CZA624	A	Connecting cables for **IT/DP/MUX** (1 m)*1
05CZA625	A	Connecting cables for **IT/DP/MUX** (2 m)*1
959149	C	Connecting cables for **IT/DP/MUX** (1 m)*2
959150	C	Connecting cables for **IT/DP/MUX** (2 m)*2
06AFM380A	A	USB Input Tool Direct (2 m)*1
06AFM380C	C	USB Input Tool Direct (2 m)*2
02AZD790A	A	Connecting cables for **U-WAVE-T** (160 mm)*1
02AZD790C	C	Connecting cables for **U-WAVE-T** (160 mm)*2
02AZE140A	A	Connecting cables for **U-WAVE-T***1 For foot switch
02AZE140C	C	Connecting cables for **U-WAVE-T***2 For foot switch
264-620	IP67	**U-WAVE-TC***1
264-621	Buzzer	**U-WAVE-TC***1
264-624	IP67	**U-WAVE-TCB** Transmitter*1
264-625	Buzzer	**U-WAVE-TCB** Transmitter*1
02AZF310	IP67	Connecting unit for **U-WAVE-TC/TCB***1

*1 For IP67 models (up to 300 mm)
*2 For series **551-2XX** and **551-22X**.

Mitutoyo reserves the right to change any or all aspects of any product specification, including prices, designs and service content, without notice.

Dial Caliper
SERIES 505

Reading

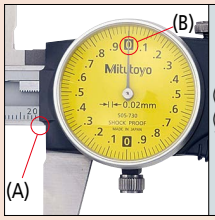

(A) Main scale reading 20. mm
(B) Dial reading 0.00 mm
20.00 mm

- Newly designed dial movement for ultra-smooth sliding.
- Easy-to-read yellow dial.
- Large finger-rest aids ease-of-use.
- Jaw tips are relieved for easy measurement of thin parts.



SPECIFICATIONS

Metric

Order No.	Range (mm)	Graduation (mm)	Maximum permissible error (mm)*2 E_{MPE}	Maximum permissible error (mm)*2 S_{MPE}	Remarks
505-730	0 - 150	0.02, 2/rev	±0.03	±0.05	—
505-734			±0.03	±0.05	Carbide-tipped jaws for outside measurement
505-735			±0.03	±0.05	Carbide-tipped jaws for outside and inside measurement
505-731	0 - 200		±0.03	±0.05	—
505-745	0 - 300		±0.04	±0.06	
505-732*1	0 - 150	0.01, 1/rev	±0.02	±0.04	
505-733*1	0 - 200		±0.03	±0.05	

Inch

Order No.	Range (in)	Graduation (in)	Maximum permissible error (in)*2 E_{MPE}	Maximum permissible error (in)*2 S_{MPE}	Remarks
505-740J	0 - 6	0.001, 0.2/rev	±0.001	±0.002	—
505-742J*1		0.001, 0.1/rev	±0.001	±0.002	—
505-742-56J			±0.001	±0.002	—
505-742-51J			±0.001	±0.002	—
505-736*1			±0.001	±0.002	Carbide-tipped jaws for outside measurement
505-738*1			±0.001	±0.002	Carbide-tipped jaws for outside and inside measurement
505-744		0.001, 0.2/rev	±0.001	±0.002	Carbide-tipped jaws for outside measurement
505-741J	0 - 8		±0.002	±0.0025	—
505-743J*1		0.001, 0.1/rev	±0.002	±0.0025	—
505-737*1		0.001, 0.2/rev	±0.002	±0.0025	Carbide-tipped jaws for outside measurement
505-739*1			±0.002	±0.0025	Carbide-tipped jaws for outside and inside measurement
505-749	0 - 12		±0.002	±0.0025	—
505-746*1		0.001, 0.1/rev	±0.002	±0.0025	
505-750		0.001, 0.2/rev	±0.002	±0.0025	Carbide-tipped jaws for outside measurement
505-747*1		0.001, 0.1/rev	±0.002	±0.0025	Carbide-tipped jaws for outside measurement
505-748*1			±0.002	±0.0025	Carbide-tipped jaws for outside and inside measurement

*1 Silver cover type
*2 Partial Surface Contact Error, E_{MPE} and Shift Error, S_{MPE} are terms (notations) used in ISO 13385-1:2019.

DIMENSIONS

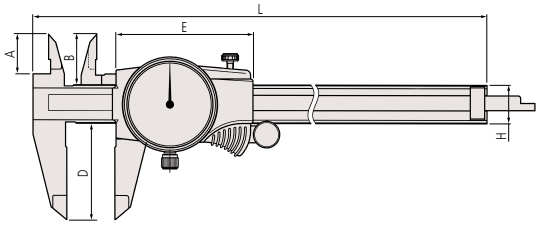

Unit: mm

Range (mm)	A	B	D	E	H	L
0 - 150	16.5	21	40	57.2	16	231
0 - 200	20	24.5	50			288
0 - 300	22	27.5	64	70.2	20	404

Outside jaw thickness: 3.5 mm
(**505-745**: 3.8 mm)

Mitutoyo reserves the right to change any or all aspects of any product specification, including prices, designs and service content, without notice.

ABSOLUTE Coolant Proof Carbon Fiber Caliper SERIES 552 — with Standard jaws

- IP66 Absolute Digital Caliper (Refer to page D-5 for details on the Absolute function.)
- Lightweight Digimatic Calipers that employ CFRP (Carbon Fiber Reinforced Plastics) in the beam.



552-303-10

SPECIFICATIONS

Metric

Order No.	Range (mm)*1	Resolution (mm)	Maximum permissible error (mm)*2	
			E_{MPE}	S_{MPE}
552-302-10	0 - 450 (20.1 - 470)	0.01	±0.04	±0.04
552-303-10	0 - 600 (20.1 - 620)		±0.04	±0.04
552-304-10	0 - 1000 (20.1 - 1020)		±0.05	±0.05
552-305-10	0 - 1500 (20.1 - 1520)		±0.09	±0.09
552-306-10	0 - 2000 (20.1 - 2020)		±0.12	±0.12

Inch / Metric

Order No.	Range*1	Resolution	Maximum permissible error*2	
			E_{MPE}	S_{MPE}
552-312-10	0 - 18 in/0 - 450 mm (0.504 - 18.5 in/12.8 - 462.7mm)	0.0005 in/0.01 mm	±0.002 in/±0.04 mm	±0.002 in/±0.04 mm
552-313-10	0 - 24 in/0 - 600 mm (0.504 - 24.5 in/12.8 - 612.7 mm)			
552-314-10	0 - 40 in/0 - 1000 mm (1.004 - 41 in/25.5 - 1025.4 mm)		±0.002 in/±0.05 mm	±0.002 in/±0.05 mm
552-315-10	0 - 60 in/0 - 1500 mm (1.004 - 61 in/25.5 - 1525.4 mm)		±0.004 in/±0.09 mm	±0.004 in/±0.09 mm
552-316-10	0 - 80 in/0 - 2000 mm (1.004 - 81 in/25.5 - 2025.4 mm)		±0.005 in/±0.12 mm	±0.005 in/±0.12 mm

- Dust/Water protection level: IP66 (IEC60529)*3
- Battery: SR44 (1 pc.), **938882**, for initial operational checks (standard accessory)
- Battery life: Approx. 5,000 hours in continuous use
- Max. response speed: Unlimited
- Material of jaws: Stainless Steel Hardened

*1 ( ): Dimension in inside measurement
*2 Partial Surface Contact Error, E_{MPE} and Shift Error, S_{MPE} are terms (notations) used in ISO 13385-1:2019.
*3 Rustproofing shall be applied after use if caliper was in contact with coolant.
Note: A constant-force mechanism is used in the finger rest; however, this is only an auxiliary mechanism to avoid measurement error caused by excessive measuring force. To measure with good accuracy, use the minimum necessary measuring force for the caliper measuring faces to make sufficient contact with the workpiece. Refer to page D-45 for details.

DIMENSIONS

Unit: mm

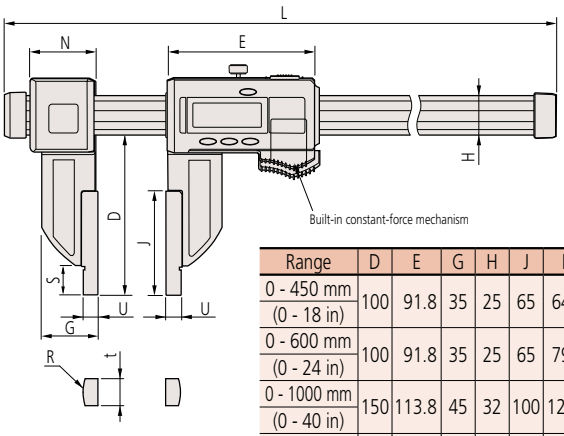

Range	D	E	G	H	J	L	N	R	S	t	U
0 - 450 mm	100	91.8	35	25	65	640	41.2	R10	18	8	10
(0 - 18 in)											(0.25 in)
0 - 600 mm	100	91.8	35	25	65	790	41.2	R10	18	8	10
(0 - 24 in)											(0.25 in)
0 - 1000 mm	150	113.8	45	32	100	1230	62.8	R10	24	8	10
(0 - 40 in)											(0.5 in)
0 - 1500 mm	150	113.8	45	32	100	1740	62.8	R10	24	8	10
(0 - 60 in)											(0.5 in)
0 - 2000 mm	150	113.8	45	32	100	2250	62.8	R10	24	8	10
(0 - 80 in)											(0.5 in)

MeasurLink® ENABLED
Data Management Software by Mitutoyo

ABSOLUTE™

IP66

Dust- and Water-Protected
TÜVRheinland CERTIFIED
www.tuv.com ID 0000022582

Measurement example



Functions

- Zero-setting
- Data hold
- Offsetting
- Presetting
- Data output
- Low-power and low-voltage alert
- Counting value composition error
- Automatic power on/off, inch/mm reading (inch/mm models)

LCD display turns off after 20 minutes inactivity but the ABS scale unit origin is stored. Moving the slider restores the display.

Optional Accessories

Order No.	Type	Description
05CZA624	A	Connecting cables for **IT**/**DP**/**MUX** (1 m)
05CZA625	A	Connecting cables for **IT**/**DP**/**MUX** (2 m)
06AFM380A	A	USB Input Tool Direct (2 m)
02AZD790A	A	Connecting cables for **U-WAVE-T** (160 mm)
02AZE140A	A	Connecting cables for **U-WAVE-T** For foot switch

Mitutoyo reserves the right to change any or all aspects of any product specification, including prices, designs and service content, without notice.

Optional accessories

Metric

	552-302-10, 552-155-10, 552-303-10 and 552-156-10	552-304-10, 552-305-10 and 552-306-10
Clamp box (1 pair)	**914053**	**914054**
Distance measurement jaw (1 pair)	**914055**	
Point ID measurement jaw (1 pair)	**914057**	

Inch / Metric

	552-312-10, 552-165-10, 552-313-10 and 552-166-10	552-314-10, 552-315-10 and 552-316-10
Clamp box (1 pair)	**914053**	**914054**
Distance measurement jaw (1 pair)	**914056**	
Point ID measurement jaw (1 pair)	**914058**	

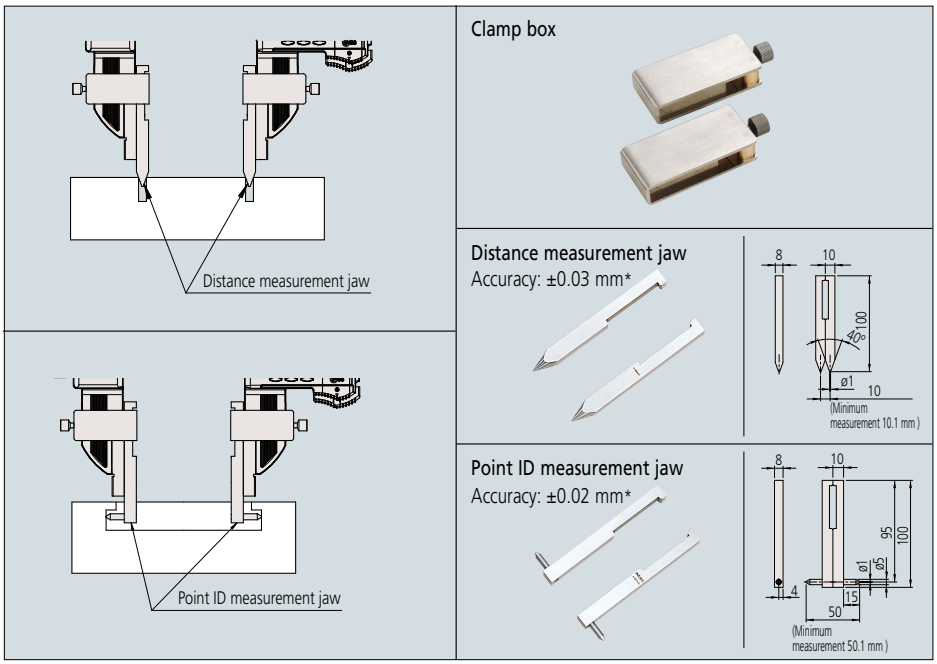

* Accuracies shown in the diagrams are of each accessory and accuracy resulting in mounting them on the main body is not guaranteed.

D

ABSOLUTE Coolant Proof Carbon Fiber Caliper SERIES 552 — with Long Jaws

- IP66 Absolute Digital Caliper (Refer to page D-5 for details on the Absolute function.)
- Lightweight Digimatic Calipers that employ CFRP (Carbon Fiber Reinforced Plastics) in the beam.



552-151-10

SPECIFICATIONS

Metric

Order No.	Range (mm)*1	Resolution (mm)	Maximum permissible error (mm)*2	
			E_{MPE}	S_{MPE}
552-150-10	0 - 450 (20.1 - 470)	0.01	±0.06	±0.06
552-151-10	0 - 600 (20.1 - 620)		±0.06	±0.06
552-152-10	0 - 1000 (20.1 - 1020)		±0.07	±0.07
552-153-10	0 - 1500 (20.1 - 1520)		±0.11	±0.11
552-154-10	0 - 2000 (20.1 - 2020)		±0.14	±0.14

Inch/Metric

Order No.	Range*1	Resolution	Maximum permissible error*2	
			E_{MPE}	S_{MPE}
552-160-10	0 - 18 in/0 - 450 mm (0.504 - 18.5 in/12.8 - 462.7 mm)	0.0005 in/0.01 mm	±0.0025 in/±0.06 mm	±0.0025 in/±0.06 mm
552-161-10	0 - 24 in/0 - 600 mm (0.504 - 24.5 in/12.8 - 612.7 mm)			
552-162-10	0 - 40 in/0 - 1000 mm (1.004 - 41 in/25.5 - 1025.4 mm)		±0.003 in/±0.07 mm	±0.003 in/±0.07 mm
552-163-10	0 - 60 in/0 - 1500 mm (1.004 - 61 in/25.5 - 1525.4 mm)		±0.0045 in/±0.11 mm	±0.0045 in/±0.11 mm
552-164-10	0 - 80 in/0 - 2000 mm (1.004 - 81 in/25.5 - 2025.4 mm)		±0.0055 in/±0.14 mm	±0.0055 in/±0.14 mm

- Dust/Water protection level: IP66 (IEC 60529)*3
- Battery: SR44 (1 pc.), **938882**, for initial operational checks (standard accessory)
- Battery life: Approx. 5,000 hours in continuous use
- Max. response speed: Unlimited
- Material of jaws: Stainless Steel Hardened

*1 ( ): Dimension in inside measurement
*2 Partial Surface Contact Error, E_{MPE} and Shift Error, S_{MPE} are terms (notations) used in ISO 13385-1:2019.
*3 Rustproofing shall be applied after use if caliper was in contact with coolant.
Note: A constant-force mechanism is used in the finger rest; however, this is only an auxiliary mechanism to avoid measurement error caused by excessive measuring force. To measure with good accuracy, use the minimum necessary measuring force for the caliper measuring faces to make sufficient contact with the workpiece. Refer to page D-45 for details.

DIMENSIONS

Unit: mm

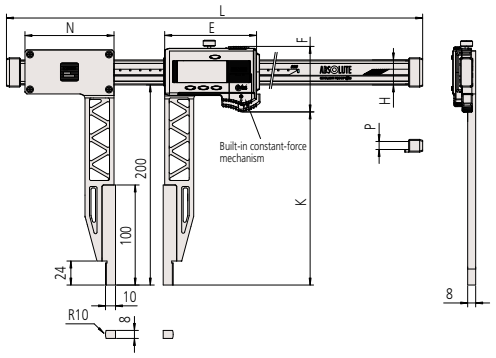

Range	E	F	H	K	L	N	P
0 - 450 mm	91.8	65.5	25	173	680	89	8
0 - 600 mm					830		
0 - 1000 mm	113.8	73	32	170.5	1280	110	12
0 - 1500 mm					1790		
0 - 2000 mm					2300		

MeasurLink® ENABLED Data Management Software by Mitutoyo

ABSOLUTE™

IP66

Dust- and Water-Protected

TÜVRheinland CERTIFIED www.tuv.com ID 0000022582

Measurement example



Functions

- Zero-setting
- Data hold
- Offsetting
- Presetting
- Data output
- Low-power and low-voltage alert
- Counting value composition error
- Automatic power on/off, inch/mm reading (inch/mm models)

Optional Accessories

Order No.	Type	Description
05CZA624	A	Connecting cables for **IT/DP/MUX** (1 m)
05CZA625	A	Connecting cables for **IT/DP/MUX** (2 m)
06AFM380A	A	USB Input Tool Direct (2 m)
02AZD790A	A	Connecting cables for **U-WAVE-T** (160 mm)
02AZE140A	A	Connecting cables for **U-WAVE-T** For foot switch

Mitutoyo reserves the right to change any or all aspects of any product specification, including prices, designs and service content, without notice.

MeasurLink® ENABLED Data Management Software by Mitutoyo

ABSOLUTE™

IP66

TÜVRheinland CERTIFIED Dust- and Water-Protected www.tuv.com ID 0000022582

ABSOLUTE Coolant Proof Carbon Fiber Caliper SERIES 552 — with Ceramic Jaws

- IP66 Absolute Digital Caliper (Refer to page D-5 for details on the Absolute function.)
- Lightweight Digimatic Calipers that employ CFRP (Carbon Fiber Reinforced Plastics) in the beam.
- The measuring faces (jaws) are made from zirconia, which is a ceramic material. This makes it possible to measure weakly magnetic workpieces; however, measurement of strongly magnetic workpieces may not be possible, as metal parts are used for the caliper's main body.



552-156-10

Functions

- Zero-setting
- Data hold
- Offsetting
- Presetting
- Data output
- Low-power and low-voltage alert
- Counting value composition error
- Automatic power on/off, inch/mm reading (inch/mm models)

LCD display turns off after 20 minutes inactivity but the ABS scale unit origin is stored. Moving the slider restores the display.

Optional Accessories

Order No.	Type	Description
05CZA624	A	Connecting cables for **IT/DP/MUX** (1 m)
05CZA625	A	Connecting cables for **IT/DP/MUX** (2 m)
06AFM380A	A	USB Input Tool Direct (2 m)
02AZD790A	A	Connecting cables for **U-WAVE-T** (160 mm)
02AZE140A	A	Connecting cables for **U-WAVE-T** For foot switch

SPECIFICATIONS

Metric

Order No.	Range (mm)*1	Resolution (mm)	Maximum permissible error (mm)*2	
			E_{MPE}	S_{MPE}
552-155-10	0 - 450 (20.1 - 470)	0.01	±0.04	±0.04
552-156-10	0 - 600 (20.1 - 620)		±0.04	±0.04

Inch/Metric

Order No.	Range*1	Resolution	Maximum permissible error*2	
			E_{MPE}	S_{MPE}
552-165-10	0 - 18 in/0 - 450 mm (0.504 - 18.5 in/12.8 - 462.7 mm)	0.0005 in/0.01 mm	±0.002 in/±0.04 mm	±0.002 in/±0.04 mm
552-166-10	0 - 24 in/0 - 600 mm (0.504 - 24.5 in/12.8 - 612.7 mm)			

- Dust/Water protection level: IP66 (IEC 60529)*3
- Battery: SR44 (1 pc.), **938882**, for initial operational checks (standard accessory)
- Battery life: Approx. 5,000 hours in continuous use
- Max. response speed: Unlimited
- Material of jaws: Zirconia

*1 ( ): Dimension in inside measurement
*2 Partial Surface Contact Error, E_{MPE} and Shift Error, S_{MPE} are terms (notations) used in ISO 13385-1:2019.
*3 Rustproofing shall be applied after use if caliper was in contact with coolant.
Note: A constant-force mechanism is used in the finger rest; however, this is only an auxiliary mechanism to avoid measurement error caused by excessive measuring force. To measure with good accuracy, use the minimum necessary measuring force for the caliper measuring faces to make sufficient contact with the workpiece. Refer to page D-45 for details.

DIMENSIONS

Unit: mm

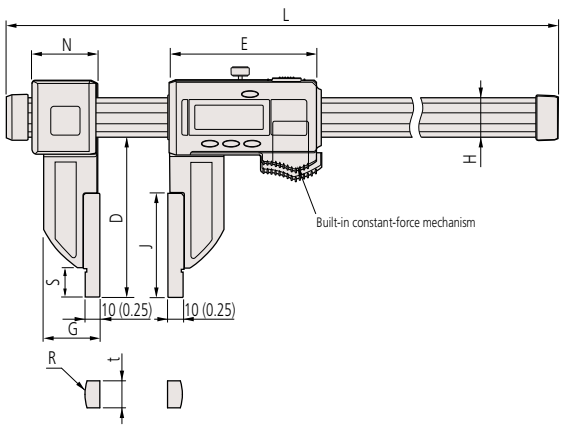

Range	D	E	G	H	J	L	N	R	S	t
0 - 450 mm (0 - 18 in)	100	91.8	35	25	65	640	41.2	R10	18	8
0 - 600 mm (0 - 24 in)	100	91.8	35	25	65	790	41.2	R10	18	8

( ): Inch/Metric type

Mitutoyo reserves the right to change any or all aspects of any product specification, including prices, designs and service content, without notice.

Mitutoyo

ABSOLUTE Coolant Proof Carbon Fiber Caliper SERIES 552 — with Interchangeable Jaws

- IP66 Absolute Digital Caliper (Refer to page D-5 for a description of Absolute measurement.)
- The range of applications can be expanded by using interchangeable jaws (optional).

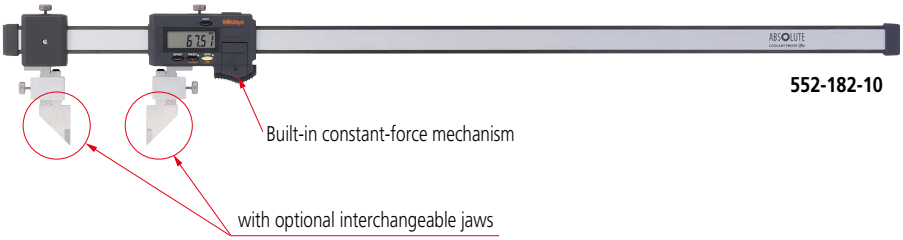

SPECIFICATIONS

Metric

Order No.	Range (mm)	Resolution (mm)	Maximum permissible error (mm)*1	
			E_{MPE}	S_{MPE}
552-181-10	0 - 450	0.01	±0.04	
552-182-10	0 - 600			
552-183-10	0 - 1000		±0.05	
552-184-10	0 - 1500		±0.09	
552-185-10	0 - 2000		±0.12	

Inch/Metric

Order No.	Range	Resolution	Maximum permissible error*1	
			E_{MPE}	S_{MPE}
552-191-10	0 - 18 in/0 - 450 mm	0.0005 in/0.01 mm	±0.002 in/±0.04 mm	
552-192-10	0 - 24 in/0 - 600 mm			
552-193-10	0 - 40 in/0 - 1000 mm		±0.002 in/±0.05 mm	
552-194-10	0 - 60 in/0 - 1500 mm		±0.004 in/±0.09 mm	
552-195-10	0 - 80 in/0 - 2000 mm		±0.005 in/±0.12 mm	

- Dust/Water protection level: IP66 (IEC 60529)*2
- Battery: SR44 (1 pc.), **938882**, for initial operational checks (standard accessory)
- Battery life: Approx. 5,000 hours in continuous use
- Max. response speed: Unlimited

*1 Partial Surface Contact Error, E_{MPE} and Shift Error, S_{MPE} are terms (notations) used in ISO 13385-1:2019.
*2 Rustproofing shall be applied after use if caliper was in contact with coolant.
Note1: The Maximum permissible error (MPE) values described above were measured using a dedicated outside measurement inspection tool.
Note2: A constant-force mechanism is used in the finger rest; however, this is only an auxiliary mechanism to avoid measurement error caused by excessive measuring force. To measure with good accuracy, use the minimum necessary measuring force for the caliper measuring faces to make sufficient contact with the workpiece. Refer to page D-45 for details.

MeasurLink® ENABLED Data Management Software by Mitutoyo
ABSOLUTE™
IP66
Dust- and Water-Protected TÜVRheinland CERTIFIED www.tuv.com ID 0000022582

Functions

- Zero-setting
- Data hold
- Offsetting
- Presetting
- Data output
- Low-power and low-voltage alert
- Counting value composition error
- Automatic power on/off, inch/mm reading (inch/mm models)

LCD display turns off after 20 minutes inactivity but the ABS scale unit origin is stored. Moving the slider restores the display.

Standard Accessories (2 pcs.)

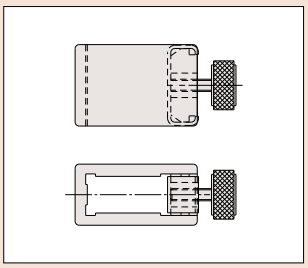

Jaw clamps: 05GZA033

Optional Accessories

Order No.	Type	Description
05CZA624	A	Connecting cables for **IT**/**DP**/**MUX** (1 m)
05CZA625	A	Connecting cables for **IT**/**DP**/**MUX** (2 m)
06AFM380A	A	USB Input Tool Direct (2 m)
02AZD790A	A	Connecting cables for **U-WAVE-T** (160 mm)
02AZE140A	A	Connecting cables for **U-WAVE-T** For foot switch

Mitutoyo reserves the right to change any or all aspects of any product specification, including prices, designs and service content, without notice.

Optional accessories

Interchangeable jaws

SPECIFICATIONS

Unit: mm

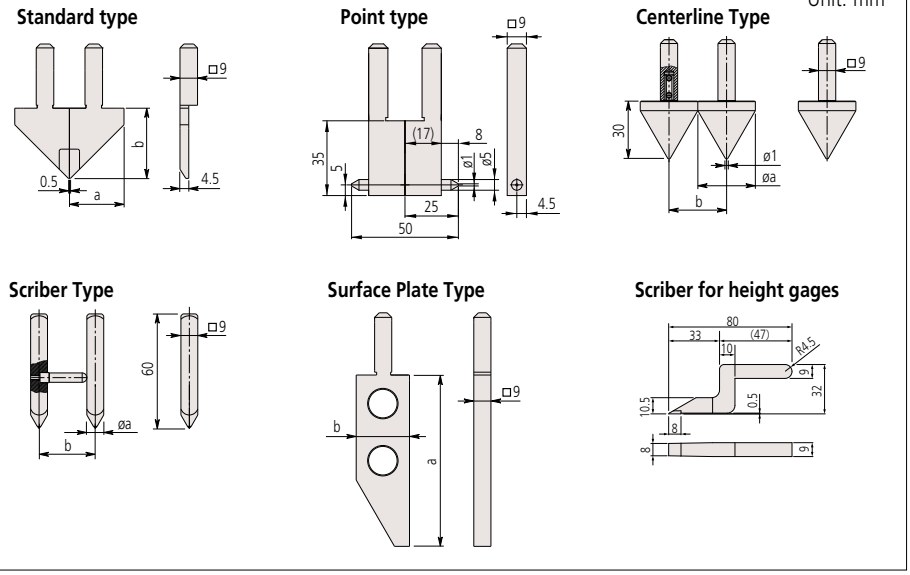

Standard Type

Order No.	Components	a	b
07CZA056	Right (**07CAA044**), Left (**07CAA045**)	28 mm (1.1 in)	36 mm (1.2 in)

Note: 1 set

Point Type

Order No.	Components	a	b
07CZA058	**07CZA041**×2 pcs.	25 mm	50 mm
07CZA059	**07CZA048**×2 pcs.	1 in	2 in

Centerline Type

Order No.	Components	a	b
07CZA057	**07CZA039**×2 pcs.	30 mm	30 mm
07CZA060	**07CZA047**×2 pcs.	1.2 in	1.2 in

Scriber Type

Order No.	Components	a	b
07CZA055	Right (**07CZA042**), Left (**07CZA043**)	8 mm	30 mm
07CZA061	Right (**07CZA042**), Left (**07CZA049**)	0.31 in	1.2 in

Surface Plate Type

Order No.	a	b
07CZA044	90 mm (3.5 in)	28 mm (1.1 in)

Note: Note that the error arising from the combination of surface plates is outside the scope of accuracy guarantee.

Scriber for height gages

Order No.
07GZA000

Type	Applicable calipers	Range	Maximum permissible error* E_{MPE}	Maximum permissible error* S_{MPE}
Standard type	**552-181-10** (**552-191-10**)	0 - 450 mm (0 - 18 in)	±0.06 mm (±0.0025 in)	
	552-182-10 (**552-192-10**)	0 - 600 mm (0 - 24 in)		
	552-183-10 (**552-193-10**)	0 - 1000 mm (0 - 40 in)	±0.07 mm (±0.0030 in)	
	552-184-10 (**552-194-10**)	0 - 1500 mm (0 - 60 in)	±0.11 mm (±0.0045 in)	
	552-185-10 (**552-195-10**)	0 - 2000 mm (0 - 80 in)	±0.14 mm (±0.0055 in)	
Point type	**552-181-10** (**552-191-10**)	Inside: 50.1 - 500 mm (2.004 - 20 in)	—	±0.09 mm (±0.0035 in)
		Outside: 0 - 450 mm (0 - 18 in)	±0.09 mm (±0.0035 in)	—
	552-182-10 (**552-192-10**)	Inside: 50.1 - 650 mm (2.004 - 26 in)	—	±0.09 mm (±0.0035 in)
		Outside: 0 - 600 mm (0 - 24 in)	±0.09 mm (±0.0035 in)	—
	552-183-10 (**552-193-10**)	Inside: 50.1 - 1050 mm (2.004 - 42 in)	—	±0.10 mm (±0.0040 in)
		Outside: 0 - 1000 mm (0 - 40 in)	±0.10 mm (±0.0040 in)	—
	552-184-10 (**552-194-10**)	Inside: 50.1 - 1550 mm (2.004 - 62 in)	—	±0.14 mm (±0.0055 in)
		Outside: 0 - 1500 mm (0 - 60 in)	±0.14 mm (±0.0055 in)	—
	552-185-10 (**552-195-10**)	Inside: 50.1 - 2050 mm (2.004 - 82 in)	—	±0.17 mm (±0.0070 in)
		Outside: 0 - 2000 mm (0 - 80 in)	±0.17 mm (±0.0070 in)	—
Centerline type	**552-181-10** (**552-191-10**)	30.1 - 480 mm (1.204 - 19.2 in)		±0.08 mm (±0.0030 in)
	552-182-10 (**552-192-10**)	30.1 - 630 mm (1.204 - 25.2 in)		
	552-183-10 (**552-193-10**)	30.1 - 1030 mm (1.204 - 41.2 in)		±0.10 mm (±0.0040 in)
	552-184-10 (**552-194-10**)	30.1 - 1530 mm (1.204 - 61.2 in)		±0.13 mm (±0.0055 in)
	552-185-10 (**552-195-10**)	30.1 - 2030 mm (1.204 - 81.2 in)		±0.16 mm (±0.0065 in)
Scriber type	**552-181-10** (**552-191-10**)	30.1 - 480 mm (1.204 - 19.2 in)		±0.11 mm (±0.0045 in)
	552-182-10 (**552-192-10**)	30.1 - 630 mm (1.204 - 25.2 in)		
	552-183-10 (**552-193-10**)	30.1 - 1030 mm (1.204 - 41.2 in)		
	552-184-10 (**552-194-10**)	30.1 - 1530 mm (1.204 - 61.2 in)		±0.15 mm (±0.0060 in)
	552-185-10 (**552-195-10**)	30.1 - 2030 mm (1.204 - 81.2 in)		±0.18 mm (±0.0070 in)
Surface plate type + Scriber type for height gages	**552-181-10** (**552-191-10**)	0 - 450 mm (0 - 17.7 in)	±0.10 mm(±0.0040 in)	
	552-182-10 (**552-192-10**)	0 - 600 mm (0 - 23.7 in)		
	552-183-10 (**552-193-10**)	0 - 1000 mm (0 - 39.4 in)	±0.11 mm (±0.0045 in)	
	552-184-10 (**552-194-10**)	0 - 1500 mm (0 - 59.4 in)	±0.15 mm (±0.0060 in)	
	552-185-10 (**552-195-10**)	0 - 2000 mm (0 - 79.6 in)	±0.18 mm (±0.0070 in)	
Surface plate type + Point type	**552-181-10** (**552-191-10**)	Outside: 0 - 450 mm (1 - 18 in)	±0.12 mm (±0.0050 in)	—
	552-182-10 (**552-192-10**)	Outside: 0 - 600 mm (1 - 24 in)	±0.12 mm (±0.0050 in)	—
	552-183-10 (**552-193-10**)	Outside: 0 - 1000 mm (1 - 40 in)	±0.13 mm (±0.0055 in)	—
	552-184-10 (**552-194-10**)	Outside: 0 - 1500 mm (1 - 60 in)	±0.17 mm (±0.0070 in)	—
	552-185-10 (**552-195-10**)	Outside: 0 - 2000 mm (1 - 80 in)	±0.20 mm (±0.0080 in)	—
Surface plate type + Centerline type	**552-181-10** (**552-191-10**)	15.1 - 465 mm (0.6 - 18.6 in)		±0.11 mm (±0.0045 in)
	552-182-10 (**552-192-10**)	15.1 - 615 mm (0.6 - 24.6 in)		
	552-183-10 (**552-193-10**)	15.1 - 1015 mm (0.6 - 40.6 in)		±0.12 mm (±0.0050 in)
	552-184-10 (**552-194-10**)	15.1 - 1515 mm (0.6 - 60.6 in)		±0.16 mm (±0.0065 in)
	552-185-10 (**552-195-10**)	15.1 - 2015 mm (0.6 - 80.6 in)		±0.19 mm (±0.0075 in)

( ): Inch/Metric models

Note: The values described in the above table are MPE values when attached to a caliper.

D

Mitutoyo reserves the right to change any or all aspects of any product specification, including prices, designs and service content, without notice.

Optional accessories

Interchangeable jaws

Typical applications

Surface plate type + Standard type

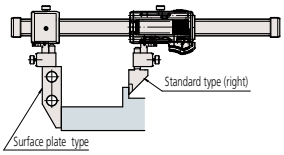

Scriber type

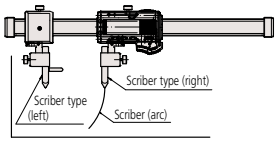

Point type

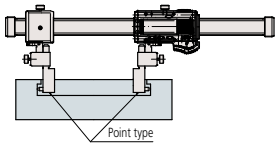

Surface plate type + Scriber for height gages

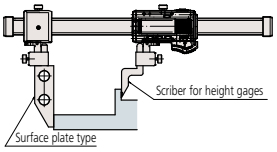

Surface plate type + Centerline type

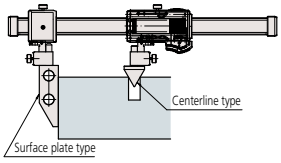

The above combinations are examples only.
Contact us for advice on accuracy when using a contact point in a combination other than as shown above.

D

Mitutoyo reserves the right to change any or all aspects of any product specification, including prices, designs and service content, without notice.

Vernier Caliper
SERIES 160 — with Nib Style Jaws and Fine Adjustment

- Inside and outside measurements can be read directly from the upper and lower vernier scales.
- The jaws have radiused measuring faces for accurate inside diameter (ID) measurement.
- With fine adjustment (**Order No. 160-127/128/101/104**).

Measurement example

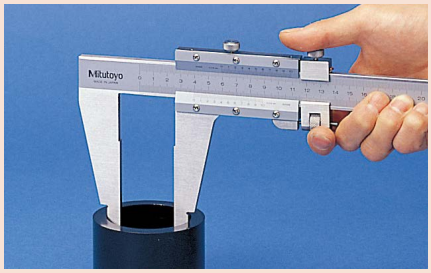

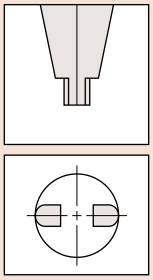

Radiused jaws for accurate ID measurement

Measurement example



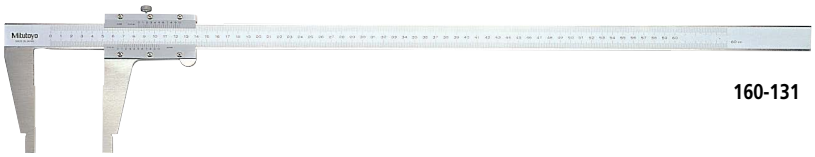

160-131

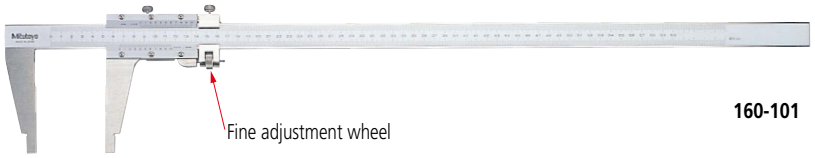

160-101

SPECIFICATIONS

Metric with inside measurement vernier scale

Order No.	Range (mm)*1	Minimum reading (mm)	Maximum permissible error (mm)*2		Remarks
			E_{MPE}	S_{MPE}	
160-130	0 (20.1) - 450	0.05	±0.10	±0.10	without fine adjustment
160-131	0 (20.1) - 600		±0.10	±0.10	
160-132	0 (20.1) - 1000		±0.15	±0.15	

*1 ( ): Minimum dimension in ID measurement
*2 Partial Surface Contact Error, E_{MPE} and Shift Error, S_{MPE} are terms (notations) used in ISO 13385-1:2019.

Metric with inside measurement vernier scale

Order No.	Range (mm)*1	Minimum reading (mm)	Maximum permissible error (mm)*2		Remarks
			E_{MPE}	S_{MPE}	
160-127	0 (10.1) - 300	0.02	±0.04	±0.04	with fine adjustment
160-128	0 (20.1) - 450		±0.05	±0.05	
160-101	0 (20.1) - 600		±0.05	±0.05	
160-104	0 (20.1) - 1000		±0.07	±0.07	

*1 ( ): Minimum dimension in ID measurement
*2 Partial Surface Contact Error, E_{MPE} and Shift Error, S_{MPE} are terms (notations) used in ISO 13385-1:2019.

Metric/Inch with metric/inch double scale

Order No.	Range*1	Minimum reading	Maximum permissible error*2		Remarks
			E_{MPE}	S_{MPE}	
160-150	0 - 300 mm/0 - 12 in (10.1 - 300 mm/0.398 - 12 in)	0.02 mm/ 0.001 in	±0.04 mm/ ±0.0015 in	±0.04 mm/ ±0.0015 in	+10 mm/0.394 in to reading in inside measurement
160-151	0 - 450 mm/0 - 18 in (20.1 - 450 mm/0.791 - 18 in)		±0.05 mm/ ±0.002 in	±0.05 mm/ ±0.002 in	+20 mm/0.787 in to reading in inside measurement
160-153	0 - 600 mm/0 - 24 in (20.1 - 600 mm/0.791 - 24 in)				
160-155	0 - 1000 mm/0 - 40 in (20.1 - 1000 mm/0.791 - 24 in)		±0.07 mm/ ±0.003 in	±0.07 mm/ ±0.003 in	

*1 ( ): Minimum dimension in ID measurement
*2 Partial Surface Contact Error, E_{MPE} and Shift Error, S_{MPE} are terms (notations) used in ISO 13385-1:2019.

D

Mitutoyo reserves the right to change any or all aspects of any product specification, including prices, designs and service content, without notice.

Vernier Caliper
SERIES 160 — with Nib Style Jaws and Fine Adjustment

Inch with inside measurement vernier scale

Order No.	Range (in)*1	Minimum reading (in)	Maximum permissible error (in)*2		Remarks
			E_{MPE}	S_{MPE}	
160-124	0 (0.304) - 12	0.001	±0.0015	±0.0015	—
160-116	0 (0.504) - 18		±0.002	±0.002	
160-102	0 (0.504) - 24		±0.002	±0.002	
160-105	0 (1.004) - 40		±0.003	±0.003	

*1 ( ): Minimum dimension in ID measurement
*2 Partial Surface Contact Error, E_{MPE} and Shift Error, S_{MPE} are terms (notations) used in ISO 13385-1:2019.

Inch/Metric with inch/metric double scale

Order No.	Range*1	Minimum reading	Maximum permissible error*2		Remarks
			E_{MPE}	S_{MPE}	
160-125	0 - 12 in/0 - 300 mm (0.304 - 12 in/7.72 - 300 mm)	0.001 in/ 0.02 mm	±0.0015 in/ ±0.04 mm	±0.0015 in/ ±0.04 mm	+0.3 in/7.62 mm to reading in inside measurement
160-119	0 - 18 in/0 - 450 mm (0.504 - 18 in/12.8 - 450 mm)		±0.002 in/ ±0.05 mm	±0.002 in/ ±0.05 mm	+0.5 in/12.7 mm to reading in inside measurement
160-103	0 - 24 in/0 - 600 mm (0.504 - 24 in/12.8 - 600 mm)				
160-106	0 - 40 in/0 - 1000 mm (1.004 - 40 in/25.5 - 1000 mm)		±0.003 in/ ±0.07 mm	±0.003 in/ ±0.07 mm	+1 in/25.4 mm to reading in inside measurement

*1 ( ): Minimum dimension in ID measurement
*2 Partial Surface Contact Error, E_{MPE} and Shift Error, S_{MPE} are terms (notations) used in ISO 13385-1:2019.

DIMENSIONS

Unit: mm

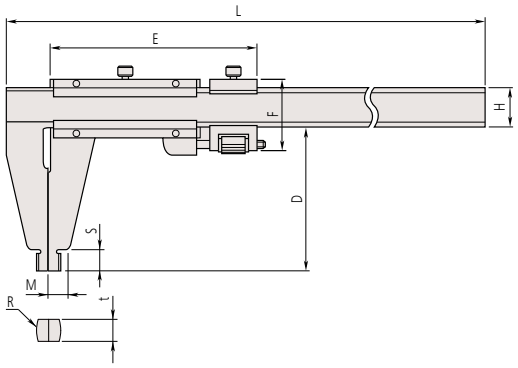

Range	D	E	F	H	L	M	R	S	t
0 - 300 mm/0 - 12 in	75	103	38	20	445	10	R5	12	3.8
0 - 450 mm*	100	89	—	25	630	14.8	R10	18	6
0 - 450 mm/0 - 18 in		112	51				R10		6
0 - 600 mm*	100	89	—	25	780	14.8	R10	18	6
0 - 600 mm/0 - 24 in		112	51				R10		6
0 - 1000 mm*	140	111	—	32	1240	17	R10	24	8
0 - 1000 mm/0 - 40 in		150	62.5				R10		8

* Without fine adjustment

Mitutoyo reserves the right to change any or all aspects of any product specification, including prices, designs and service content, without notice.

Long Jaw Vernier Caliper SERIES 534

- Long jaws for measuring hard-to-reach workpiece features.
- Inside and outside measurements can be read directly from the upper and lower vernier scales.
- Inside measurement is possible upwards from the minimum inside measuring length (jaws closed).



534-110

SPECIFICATIONS

Metric with inside measurement vernier scale

Order No.	Range (mm)*1	Graduation (mm)	Maximum permissible error (mm)*2		Remarks
			E_{MPE}	S_{MPE}	
534-109	0 (10.1) - 300	0.05	±0.07	±0.07	without fine adjustment
534-110	0 (20.1) - 500		±0.13	±0.13	

*1 ( ): Minimum dimension in ID measurement
*2 Partial Surface Contact Error, E_{MPE} and Shift Error, S_{MPE} are terms (notations) used in ISO 13385-1:2019.

Metric/Inch with metric/inch double scale

Order No.	Range*1	Graduation	Maximum permissible error*2		Remarks
			E_{MPE}	S_{MPE}	
534-101	0 - 300 mm/0 - 12 in (10.1 - 300 mm/0.398 - 12 in)	0.05 mm/ 1/128 in	±0.07 mm/ ±0.5/128 in	±0.07 mm/ ±0.5/128 in	+10 mm/0.394 in to reading in inside measurement without fine adjustment
534-105	0 - 300 mm/0 -12 in (10.1 - 300 mm/0.398 - 12 in)	0.02 mm/ 0.001 in	±0.04 mm/ ±0.002 in	±0.04 mm/ ±0.002 in	
534-102	0 - 500 mm/0 - 20 in (20.1 - 500 mm/0.791 - 20 in)	0.05 mm/ 1/128 in	±0.13 mm/ ±0.5/128 in	±0.13 mm/ ±0.5/128 in	+20 mm/0.787 in to reading in inside measurement without fine adjustment
534-106		0.02 mm/ 0.001 in	±0.06 mm/ ±0.003 in	±0.06 mm/ ±0.003 in	
534-103	0 - 750 mm/0 - 30 in (20.1 - 750 mm/0.791 - 30 in)	0.05 mm/ 1/128 in	±0.16 mm/ ±1/128 in	±0.16 mm/ ±1/128 in	
534-107		0.02 mm/ 0.001 in	±0.08 mm/ ±0.004 in	±0.08 mm/ ±0.004 in	
534-104	0 - 1000 mm/0 - 40 in (20.1 - 1000 mm/0.791 - 40 in)	0.05 mm/ 1/128 in	±0.2 mm/ ±1/128 in	±0.2 mm/ ±1/128 in	
534-108		0.02 mm/ 0.001 in	±0.1 mm/ ±0.004 in	±0.1 mm/ ±0.004 in	

*1 ( ): Minimum dimension in ID measurement
*2 Partial Surface Contact Error, E_{MPE} and Shift Error, S_{MPE} are terms (notations) used in ISO 13385-1:2019.
Note: For external dimensions, refer to page D-25.

Long Jaw Vernier Caliper SERIES 534

- Long jaws for measuring hard-to-reach workpiece features.
- Inside and outside measurements can be read directly from the upper and lower vernier scales.
- The fine-adjustment wheel enables precise feed and adjustment.
- Inside measurement is possible upwards from the minimum inside measuring length (jaws closed).



Measurement example

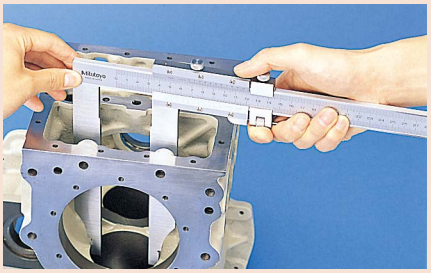

SPECIFICATIONS

Metric with inside measurement vernier scale

Order No.	Range (mm)*1	Graduation (mm)	Maximum permissible error (mm)*2		Remarks
			E_{MPE}	S_{MPE}	
534-113	0 (10.1) - 300	0.02	±0.04	±0.04	with fine adjustment
534-114	0 (20.1) - 500		±0.06	±0.06	
534-115	0 (20.1) - 750		±0.08	±0.08	
534-116	0 (20.1) - 1000		±0.10	±0.10	

*1 ( ): Minimum dimension in ID measurement
*2 Partial Surface Contact Error, E_{MPE} and Shift Error, S_{MPE} are terms (notations) used in ISO 13385-1:2019.

Inch with inside measurement vernier scale

Order No.	Range (in)*1	Graduation (in)	Maximum permissible error (in)*2		Remarks
			E_{MPE}	S_{MPE}	
534-117	0 (0.304) - 12	0.001	±0.002	±0.002	with fine adjustment
534-118	0 (0.804) - 20		±0.003	±0.003	
534-119	0 (0.804) - 30		±0.004	±0.004	
534-120	0 (0.804) - 40				

*1 ( ): Minimum dimension in ID measurement
*2 Partial Surface Contact Error, E_{MPE} and Shift Error, S_{MPE} are terms (notations) used in ISO 13385-1:2019.

DIMENSIONS

Unit: mm

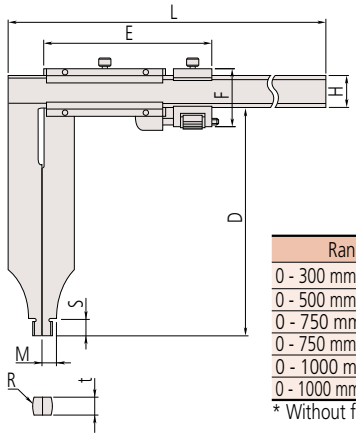

Range	D	E	F	H	L	M	R	S	t
0 - 300 mm/0 - 12 in	90	103	38	20	445	7	R5	12	3.8
0 - 500 mm/0 - 20 in	200	112	51	25	682	12	R10	18.5	6
0 - 750 mm*		150	—	32	995		R10		
0 - 750 mm/0 - 30 in			62.5				R10		8
0 - 1000 mm*			—		1230		R10		8
0 - 1000 mm/0 - 40 in			62.5				R10		8

* Without fine adjustment

Mitutoyo reserves the right to change any or all aspects of any product specification, including prices, designs and service content, without notice.

MeasurLink® ENABLED
Data Management Software by Mitutoyo

U-WAVE fit

ABSOLUTE™

IP67

Dust- and Water-Protected
TÜVRheinland CERTIFIED
www.tuv.com ID 0000045042

Offset Caliper
SERIES 573 — ABSOLUTE Digimatic type

- The beam-mounted jaw can be adjusted to facilitate measurement of stepped sections and hard-to-get-at workpiece features.

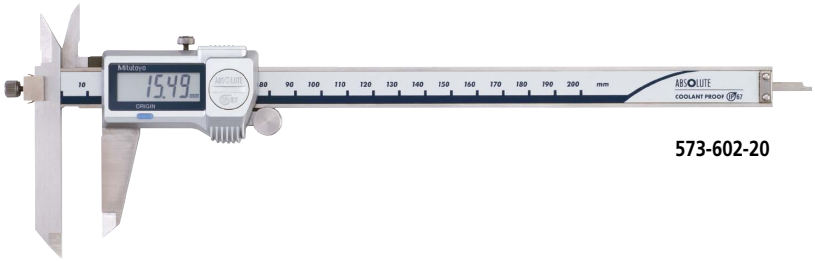

573-602-20

Measurement example



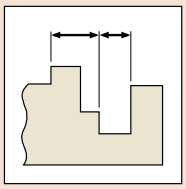

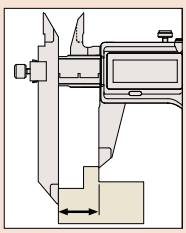

Optional Accessories

Order No.	Type	Description
05CZA624	A	Connecting cables for **IT/DP/MUX** (1 m)
05CZA625	A	Connecting cables for **IT/DP/MUX** (2 m)
06AFM380A	A	USB Input Tool Direct (2 m)
02AZD790A	A	Connecting cables for **U-WAVE-T** (160 mm)
02AZE140A	A	Connecting cables for **U-WAVE-T** For foot switch
264-620	IP67	**U-WAVE-TC**
264-621	Buzzer	**U-WAVE-TC**
264-624	IP67	**U- WAVE-TCB** Transmitter
264-625	Buzzer	**U- WAVE-TCB** Transmitter
02AZF310	IP67	Connecting unit for **U-WAVE-TC/TCB**

SPECIFICATIONS

Metric Digimatic model

Order No.	Range (mm)	Resolution (mm)	Maximum permissible error (mm)*2	
			E_{MPE}	S_{MPE}
573-601-20	0 - 150	0.01	±0.02	±0.04
573-611-20*1	0 - 150		±0.02	±0.04
573-602-20	0 - 200		±0.02	±0.04
573-612-20*1	0 - 200		±0.02	±0.04
573-604-20	0 - 300		±0.03	±0.05
573-614-20*1	0 - 300		±0.03	±0.05

Inch / Metric Digimatic model

Order No.	Range	Resolution	Maximum permissible error*2	
			E_{MPE}	S_{MPE}
573-701-20	0 - 6 in/0 - 150 mm	0.0005 in/0.01 mm	±0.001 in/±0.02 mm	±0.002 in/±0.04 mm
573-702-20	0 - 8 in/0 - 200 mm			
573-704-20	0 - 12 in/0 - 300 mm		±0.0015 in/±0.03 mm	±0.0025 in/±0.05 mm

- Dust/Water protection level: IP67 (IEC 60529)*3
- Battery: SR44 (1 pc.), **938882**, for initial operational checks (standard accessory)
- Battery life: Approx. 5 years under normal use
- Scale type: ABSOLUTE electromagnetic induction linear encoder
- Max. response speed: Unlimited

*1 Without thumb roller
*2 Partial Surface Contact Error, E_{MPE} and Shift Error, S_{MPE} are terms (notations) used in ISO 13385-1:2019.
*3 Rustproofing shall be applied after use if caliper was in contact with coolant.

DIMENSIONS

Unit: mm

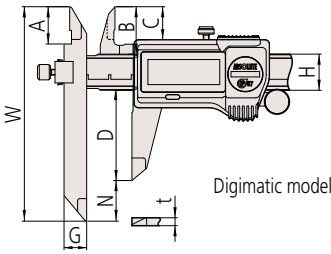

Digimatic model

Order No.	Model	Range (mm)	A	B	C	D	G	H	N	W	t
573-601-20	Digimatic model	0 - 150	16.5	21	14.6	40	10	16	(18)	95	3.5
573-602-20		0 - 200	20	24.5	18.1	50			(4)		
573-604-20		0 - 300	22	27.5	19.8	64	15	20	(23.5)	135	3.8

D

Mitutoyo reserves the right to change any or all aspects of any product specification, including prices, designs and service content, without notice.

Mitutoyo

Offset Caliper
SERIES 536 — Vernier type

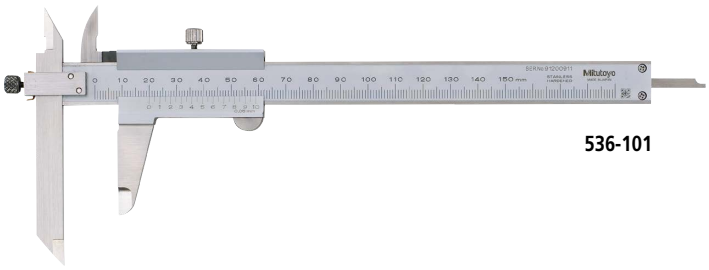

SPECIFICATIONS

Metric Analog model

Order No.	Range (mm)	Graduation (mm)	Maximum permissible error (mm)*	
			E_{MPE}	S_{MPE}
536-101	0 - 150	0.05	±0.05	±0.07
536-102	0 - 200		±0.05	±0.07
536-103	0 - 300		±0.08	±0.10

* Partial Surface Contact Error, E_{MPE} and Shift Error, S_{MPE} are terms (notations) used in ISO 13385-1:2019.

DIMENSIONS

Unit: mm

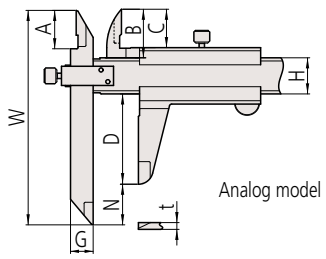

Analog model

Order No.	Model	Range (mm)	A	B	C	D	G	H	N	W	t
536-101	Analog model	0 - 150	17	21.5	17	40	10	16	(18)	95	3
536-102		0 - 200	20.5	25	20.5	50			(4)		
536-103		0 - 300	22	27.5	22	64	15	20	(23.5)	135	3.8

Mitutoyo reserves the right to change any or all aspects of any product specification, including prices, designs and service content, without notice.

MeasurLink® ENABLED Data Management Software by Mitutoyo

U-WAVE fit

ABSOLUTE™

IP67

TÜVRheinland CERTIFIED Dust- and Water-Protected www.tuv.com ID 0000045042

Measurement example



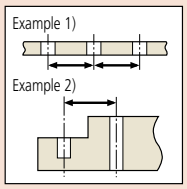

Optional Accessories

Order No.	Type	Description
05CZA624	A	Connecting cables for **IT/DP/MUX** (1 m)
05CZA625	A	Connecting cables for **IT/DP/MUX** (2 m)
06AFM380A	A	USB Input Tool Direct (2 m)
02AZD790A	A	Connecting cables for **U-WAVE-T** (160 mm)
02AZE140A	A	Connecting cables for **U-WAVE-T** For foot switch
264-620	IP67	**U-WAVE-TC**
264-621	Buzzer	**U-WAVE-TC**
264-624	IP67	**U- WAVE-TCB** Transmitter
264-625	Buzzer	**U- WAVE-TCB** Transmitter
02AZF310	IP67	Connecting unit for **U-WAVE-TC/TCB**

Inspection equipment for offset caliper

05FAJ735

Unit: mm

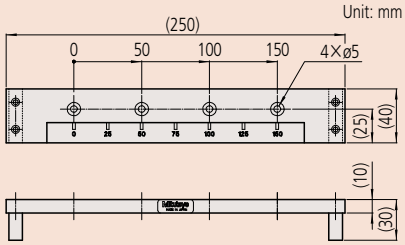

Offset Centerline Caliper
SERIES 573 — ABSOLUTE Digimatic type

- Specially designed for hole Center-to-Center measurements on the same, or offset, planes.
- Digimatic models are IP67 Absolute type. Slider action is smooth, firm and comfortable.
- Digimatic models need the compensation value (engraved on the moving jaw) added to the displayed value for correct measurement. However, the featured Offset function enables this to be done easily just by pressing the OFFSET button after the jaws are brought together and the ORIGIN button is pressed.

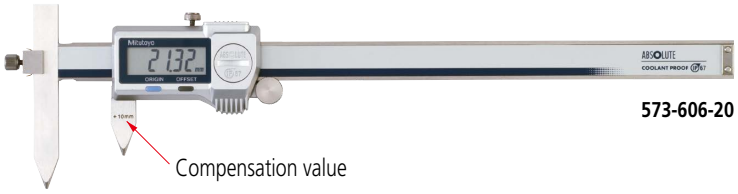

573-606-20

SPECIFICATIONS

Metric Digimatic model

Order No.	Range (mm)	Resolution (mm)	Maximum permissible error (mm)*2	
			E_{MPE}	S_{MPE}
573-605-20	10.1 - 160	0.01		±0.03
573-615-20*1	10.1 - 160			±0.03
573-606-20	10.1 - 210			±0.03
573-616-20*1	10.1 - 210			±0.03
573-608-20	10.1 - 310			±0.04
573-618-20*1	10.1 - 310			±0.04

Inch/Metric Digimatic model

Order No.	Range	Resolution	Maximum permissible error*2	
			E_{MPE}	S_{MPE}
573-705-20	0.404 - 6.4 in/10.26 - 160.16 mm	0.0005 in/0.01 mm		±0.0015 in/±0.03 mm
573-706-20	0.404 - 8.4 in/10.26 - 210.16 mm			±0.0015 in/±0.03 mm
573-708-20	0.404 - 12.4 in/10.26- 310.16 mm			±0.0015 in/±0.04 mm

- Dust/Water protection level: IP67 (IEC 60529)*3
- Battery: SR44 (1 pc.), **938882**, for initial operational checks (standard accessory)
- Battery life: Approx. 5 years under normal use
- Scale type: ABSOLUTE electromagnetic induction linear encoder
- Max. response speed: Unlimited

*1 Without thumb roller

*2 Partial Surface Contact Error, E_{MPE} and Shift Error, S_{MPE} are terms (notations) used in ISO 13385-1:2019.

*3 Rustproofing shall be applied after use if caliper was in contact with coolant.

DIMENSIONS

Unit: mm

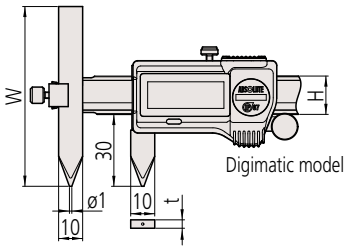

Range	H	W	t	Applicable hole
10.26 - 160.16 mm/0.404 - 6.4 in	16	75	3.5	ø1.5 - ø9.5 mm
10.26 - 210.16 mm/0.404 - 8.4 in				
10.26 - 310.16 mm/0.404 - 12.4 in	20	100	3.8	

D

Mitutoyo reserves the right to change any or all aspects of any product specification, including prices, designs and service content, without notice.

Mitutoyo

Offset Centerline Caliper
SERIES 536 — Vernier type

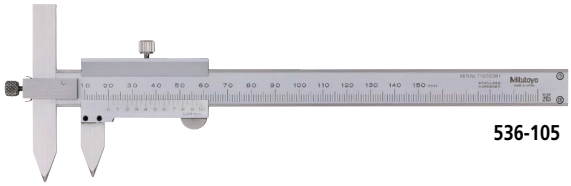

536-105

SPECIFICATIONS

Metric Analog model

Order No.	Range (mm)	Graduation (mm)	Maximum permissible error (mm)*	
			E_{MPE}	S_{MPE}
536-105	10.1 - 150	0.05		±0.05
536-106	10.1 - 200			±0.05
536-107	10.1 - 300			±0.08

* Partial Surface Contact Error, E_{MPE} and Shift Error, S_{MPE} are terms (notations) used in ISO 13385-1:2019.

DIMENSIONS

Unit: mm

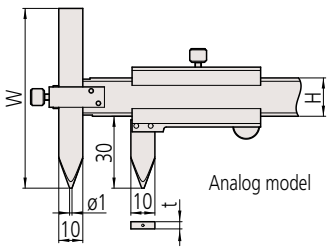

Analog model

Range (mm)	H	W	t	Applicable hole
10 - 150	16	75	3	ø1.5 - ø9.5 mm
10 - 200				
10 - 300	20	100	3.8	

Mitutoyo reserves the right to change any or all aspects of any product specification, including prices, designs and service content, without notice.

MeasurLink® ENABLED Data Management Software by Mitutoyo

ABSOLUTE™

IP67

TÜVRheinland CERTIFIED Dust- and Water-Protected www.tuv.com ID 0000045042

Optional Accessories

Order No.	Type	Description
05CZA624	A	Connecting cables for **IT/DP/MUX** (1 m)
05CZA625	A	Connecting cables for **IT/DP/MUX** (2 m)
06AFM380A	A	USB Input Tool Direct (2 m)
02AZD790A	A	Connecting cables for **U-WAVE-T** (160 mm)
02AZE140A	A	Connecting cables for **U-WAVE-T** For foot switch

Inspection equipment for center-to-center type*

05FAJ735

Unit: mm

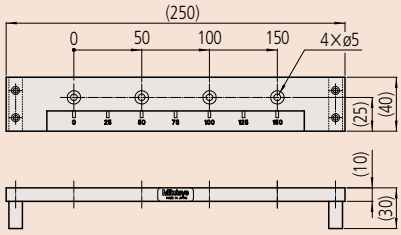

* Inspection equipment for Edge-to-center type is available by special order.

ABSOLUTE Back-Jaw Centerline Caliper SERIES 573 — Center-to-Center & Edge-to-Center Types

- Specially designed to measure hole Center-to-Center and Edge-to-Center distances. Provided with jaws on the back of the slider, measurements can be read easily from above.
- Direct reading of pitch measurements is available due to the offset value setting function.

Edge-to-center distance type

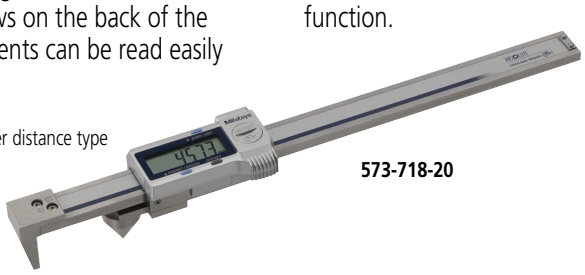

573-718-20

SPECIFICATIONS

Metric

Order No.	Range (mm)	Resolution (mm)	Maximum permissible error (mm)*2	
			E_{MPE}	S_{MPE}
573-718-20*1	10.1 - 200	0.01		±0.10
573-719-20*1	10.1 - 300			±0.15

- Battery: SR44 (1 pc.), **938882**, for initial operational checks (standard accessory)
- Scale type: ABSOLUTE electromagnetic induction linear encoder
- Max. response speed: Unlimited

*1 Applicable hole diameter: ø1.5 - ø19.5 mm

*2 Partial Surface Contact Error, E_{MPE} and Shift Error, S_{MPE} are terms (notations) used in ISO 13385-1:2019.

DIMENSIONS

Unit: mm

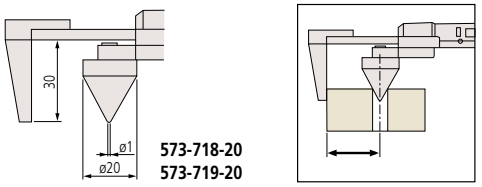

573-718-20
573-719-20

Center-to-center distance type



573-716-20

SPECIFICATIONS

Metric

Order No.	Range (mm)	Resolution (mm)	Maximum permissible error (mm)*2	
			E_{MPE}	S_{MPE}
573-716-20*1	10.1 - 200	0.01		±0.10
573-717-20*1	10.1 - 300			±0.15

- Battery: SR44 (1 pc.), **938882**, for initial operational checks (standard accessory)
- Scale type: ABSOLUTE electromagnetic induction linear encoder
- Max. response speed: Unlimited

*1 Applicable hole diameter: ø1.5 - ø19.5 mm

*2 Partial Surface Contact Error, E_{MPE} and Shift Error, S_{MPE} are terms (notations) used in ISO 13385-1:2019.

DIMENSIONS

Unit: mm

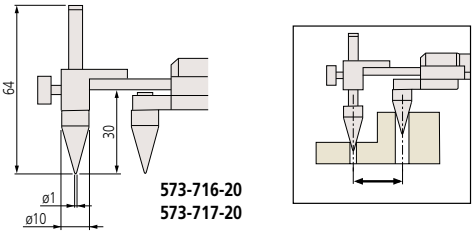

573-716-20
573-717-20

D

Point Caliper
SERIES 573, 536 — ABSOLUTE Digimatic and vernier types

- Narrow-tip jaws fit into very small grooves and tracks.
- Allows step measurement.
- Digimatic models are IP67 Absolute type. Slider action is smooth, firm and comfortable.

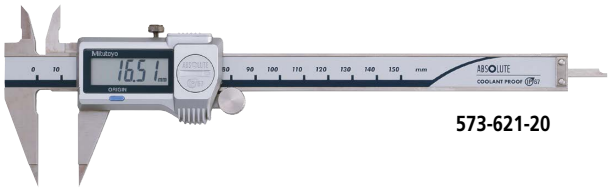

573-621-20

SPECIFICATIONS

Metric Digimatic model

Order No.	Range (mm)	Resolution (mm)	Maximum permissible error (mm)*2	
			E_{MPE}	S_{MPE}
573-621-20	0 - 150	0.01	±0.02	±0.04
573-625-20	0 - 150		±0.02	±0.04
573-622-20*1	0 - 150		±0.02	±0.04
573-626-20*1	0 - 150		±0.02	±0.04

Inch / Metric Digimatic model

Order No.	Range	Resolution	Maximum permissible error*2	
			E_{MPE}	S_{MPE}
573-721-20	0 - 6 in/0 - 150 mm	0.0005 in/0.01 mm	±0.001 in/±0.02 mm	±0.002 in/±0.04 mm
573-725-20				

- Dust/Water protection level: IP67 (IEC 60529)*3
- Battery: SR44 (1 pc.), **938882**, for initial operational checks (standard accessory)
- Battery life: Approx. 5 years under normal use
- Scale type: ABSOLUTE electromagnetic induction linear encoder
- Max. response speed: Unlimited
- With depth bar

*1 Without thumb roller
*2 Partial Surface Contact Error, E_{MPE} and Shift Error, S_{MPE} are terms (notations) used in ISO 13385-1:2019.
*3 Rustproofing shall be applied after use if caliper was in contact with coolant.

DIMENSIONS

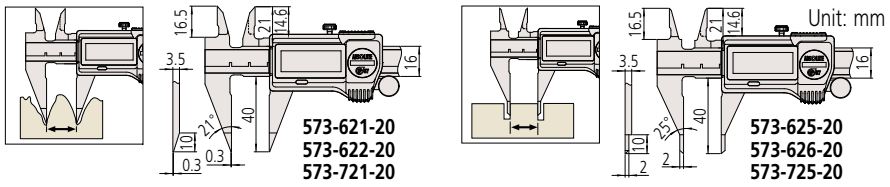

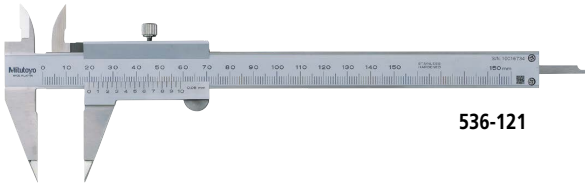

536-121

SPECIFICATIONS

Metric Analog model

Order No.	Range (mm)	Graduation (mm)	Maximum permissible error (mm)*	
			E_{MPE}	S_{MPE}
536-121	0 - 150	0.05	±0.05	±0.07

- With depth bar

* Partial Surface Contact Error, E_{MPE} and Shift Error, S_{MPE} are terms (notations) used in ISO 13385-1:2019.

DIMENSIONS

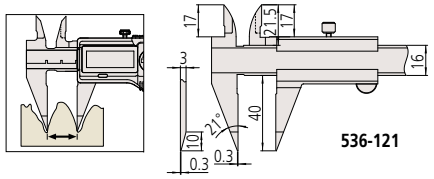

MeasurLink® ENABLED
Data Management Software by Mitutoyo

U-WAVE fit

ABSOLUTE™

Applicable models: **series 573**

IP67

Dust- and Water-Protected
TÜVRheinland CERTIFIED
www.tuv.com ID 0000045042

Measurement example



Optional Accessories (for series 573)

Order No.	Type	Description
05CZA624	A	Connecting cables for **IT**/**DP**/**MUX** (1 m)
05CZA625	A	Connecting cables for **IT**/**DP**/**MUX** (2 m)
06AFM380A	A	USB Input Tool Direct (2 m)
02AZD790A	A	Connecting cables for **U-WAVE-T** (160 mm)
02AZE140A	A	Connecting cables for **U-WAVE-T** For foot switch
264-620	IP67	**U-WAVE-TC**
264-621	Buzzer	**U-WAVE-TC**
264-624	IP67	**U- WAVE-TCB** Transmitter
264-625	Buzzer	**U- WAVE-TCB** Transmitter
02AZF310	IP67	Connecting unit for **U-WAVE-TC**/**TCB**

D

Mitutoyo reserves the right to change any or all aspects of any product specification, including prices, designs and service content, without notice.

MeasurLink® ENABLED Data Management Software by Mitutoyo

U-WAVE fit

ABSOLUTE™

Applicable models: **series 573**

IP67

Dust- and Water-Protected

TÜVRheinland CERTIFIED

www.tuv.com ID 0000045042

Measurement example



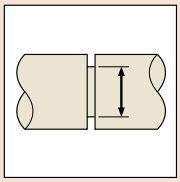

Optional Accessories (for series 573)

Order No.	Type	Description
05CZA624	A	Connecting cables for **IT/DP/MUX** (1 m)
05CZA625	A	Connecting cables for **IT/DP/MUX** (2 m)
06AFM380A	A	USB Input Tool Direct (2 m)
02AZD790A	A	Connecting cables for **U-WAVE-T** (160 mm)
02AZE140A	A	Connecting cables for **U-WAVE-T** For foot switch
264-620	IP67	**U-WAVE-TC**
264-621	Buzzer	**U-WAVE-TC**
264-624	IP67	**U- WAVE-TCB** Transmitter
264-625	Buzzer	**U- WAVE-TCB** Transmitter
02AZF310	IP67	Connecting unit for **U-WAVE-TC/TCB**

Blade Type Caliper
SERIES 573, 536 — ABSOLUTE Digimatic and vernier types

- The thin blade-type jaws fit into very small grooves.
- The outside measuring faces are carbide tipped.
- Allows step measurement.
- Digimatic models are IP67 Absolute type. Slider action is smooth, firm and comfortable.

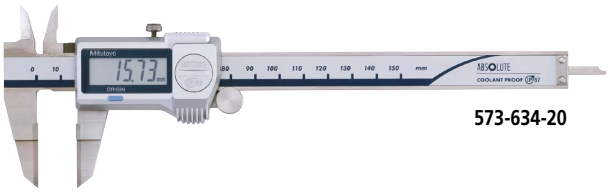

573-634-20

SPECIFICATIONS

Metric Digimatic model

Order No.	Range (mm)	Resolution (mm)	Maximum permissible error (mm)*2	
			E_{MPE}	S_{MPE}
573-634-20	0 - 150	0.01	±0.02	±0.04
573-635-20*1	0 - 150		±0.02	±0.04

Inch/Metric Digimatic model

Order No.	Range	Resolution	Maximum permissible error*2	
			E_{MPE}	S_{MPE}
573-734-20	0 - 6 in/0 - 150 mm	0.0005 in/0.01 mm	±0.001 in/±0.02 mm	±0.002 in/±0.04 mm

- Dust/Water protection level: IP67 (IEC 60529)*3
- Battery: SR44 (1 pc.), **938882**, for initial operational checks (standard accessory)
- Battery life: Approx. 5 years under normal use
- Scale type: ABSOLUTE electromagnetic induction linear encoder
- Max. response speed: Unlimited

*1 Without thumb roller

*2 Partial Surface Contact Error, E_{MPE} and Shift Error, S_{MPE} are terms (notations) used in ISO 13385-1:2019.

*3 Rustproofing shall be applied after use if caliper was in contact with coolant.

DIMENSIONS

Unit: mm

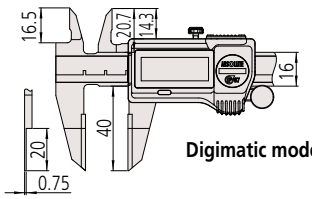

Digimatic model

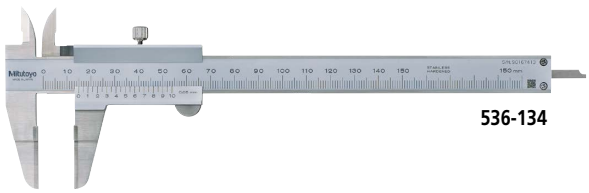

536-134

SPECIFICATIONS

Metric Analog model

Order No.	Range (mm)	Graduation (mm)	Maximum permissible error (mm)*	
			E_{MPE}	S_{MPE}
536-134	0 - 150	0.05	±0.05	±0.07
536-135	0 - 200		±0.05	±0.07
536-136	0 - 300		±0.08	±0.10

* Partial Surface Contact Error, E_{MPE} and Shift Error, S_{MPE} are terms (notations) used in ISO 13385-1:2019.

DIMENSIONS

Unit: mm

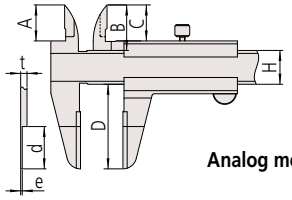

Analog model

Range (mm)	A	B	C	D	d	e	H	t
0 - 150	17	21.5	17	40	20	0.75	16	3
0 - 200	20.5	25	20.5	50	25			
0 - 300	22	27.5	22	64	30	1	20	3.8

D

Mitutoyo reserves the right to change any or all aspects of any product specification, including prices, designs and service content, without notice.

Mitutoyo

ABSOLUTE Inside Caliper
SERIES 573 — Knife-edge/Inside Groove/Point Jaw Type

- Dedicated caliper for inside measurement.
- Digimatic models are IP67 Absolute type. Slider action is smooth, firm and comfortable.

Knife-edge type

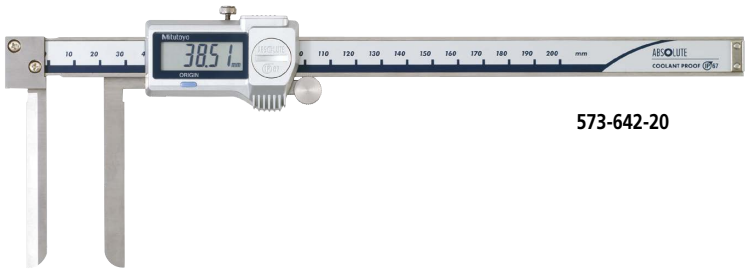

573-642-20

Inside groove type



Compensation value

573-645-20

Point jaw type



Compensation value

573-646-20

SPECIFICATIONS

Metric Digimatic model

Order No.	Range (mm)	Resolution (mm)	Maximum permissible error (mm)*3		Remarks
			E_{MPE}	S_{MPE}	
573-642-20	10 - 200	0.01		±0.05	Knife-edge type, Measurable min.
573-643-20*1	10 - 200			±0.05	Knife-edge type, Measurable min.
573-645-20*2	10.1 - 160			±0.05	Inside groove type, Measurable min.
573-647-20*1	10.1 - 160			±0.05	Inside groove type, Measurable min.
573-646-20*2	20.1 - 170			±0.03	Point jaw type, Measurable min.
573-648-20*1	20.1 - 170			±0.03	Point jaw type, Measurable min.

Inch/Metric Digimatic model

Order No.	Range	Resolution	Maximum permissible error*3		Remarks
			E_{MPE}	S_{MPE}	
573-742-20	0.4 - 8 in/ 10 - 200 mm	0.0005 in/ 0.01 mm		±0.002 in/ ±0.05 mm	Knife-edge type, Measurable min.
573-745-20*2	0.404 - 6.4 in/ 10.26 - 160.16 mm			±0.002 in/ ±0.05 mm	Inside groove type, Measurable min.
573-746-20*2	0.804 - 6.8 in/ 20.42 - 170.32 mm			±0.0015 in/ ±0.03 mm	Point jaw type, Measurable min.

- Dust/Water protection level: IP67 (IEC 60529)*4
- Battery: SR44 (1 pc.), **938882**, for initial operational checks (standard accessory)
- Battery life: Approx. 5 years under normal use
- Scale type: ABSOLUTE electromagnetic induction linear encoder
- Max. response speed: Unlimited

*1 Without thumb roller
*2 Includes the offsetting function, which indicates the actual measurement value.
*3 Partial Surface Contact Error, E_{MPE} and Shift Error, S_{MPE} are terms (notations) used in ISO 13385-1:2019.
*4 Rustproofing shall be applied after use if caliper was in contact with coolant.

MeasurLink® ENABLED Data Management Software by Mitutoyo
U-WAVE fit
ABSOLUTE™
IP67 Dust- and Water-Protected TÜVRheinland CERTIFIED www.tuv.com ID 0000045042

Measurement example



Optional Accessories

Order No.	Type	Description
05CZA624	A	Connecting cables for **IT/DP/MUX** (1 m)
05CZA625	A	Connecting cables for **IT/DP/MUX** (2 m)
06AFM380A	A	USB Input Tool Direct (2 m)
02AZD790A	A	Connecting cables for **U-WAVE-T** (160 mm)
02AZE140A	A	Connecting cables for **U-WAVE-T** For foot switch
264-620	IP67	**U-WAVE-TC**
264-621	Buzzer	**U-WAVE-TC**
264-624	IP67	**U- WAVE-TCB** Transmitter
264-625	Buzzer	**U- WAVE-TCB** Transmitter
02AZF310	IP67	Connecting unit for **U-WAVE-TC/TCB**

Note: **U-WAVE-TC/TCB** cannot be used with Knife-edge Type (**573-642-20**, **573-643-20** and **573-742-20**).

D

Mitutoyo reserves the right to change any or all aspects of any product specification, including prices, designs and service content, without notice.

DIMENSIONS

Unit: mm

Knife-edge type: 573-642-20, 573-643-20, 573-742-20

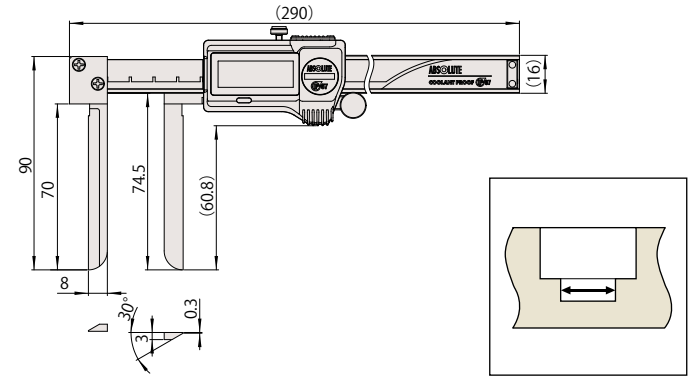

Inside groove type: 573-645-20, 573-647-20, 573-745-20

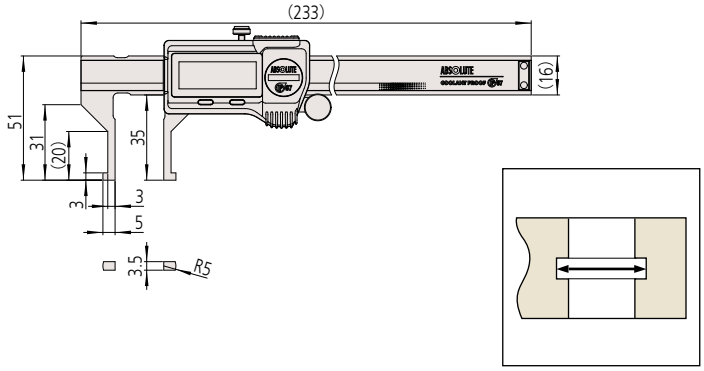

Point jaw type: 573-646-20, 573-648-20, 573-746-20

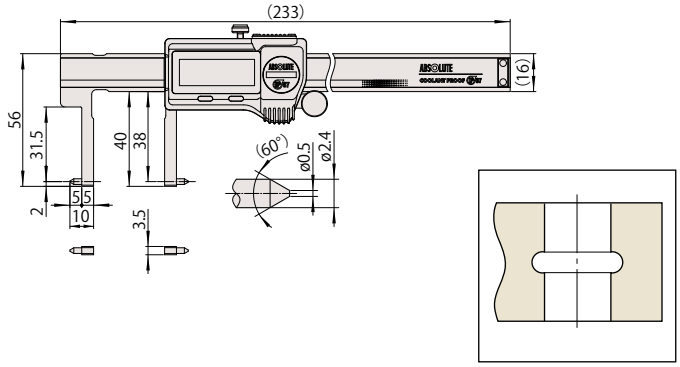

D

ABSOLUTE Inside Caliper
SERIES 536 — Knife-edge/Inside Groove/Point Jaw Type

• Dedicated caliper for inside measurement.

Knife-edge type

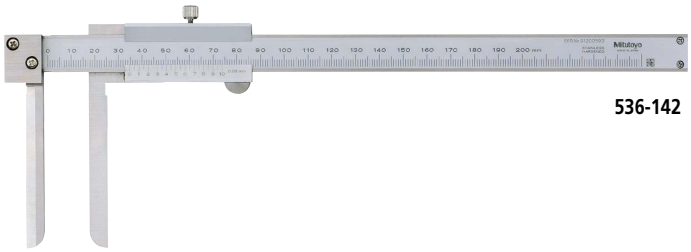

536-142

Inside groove type

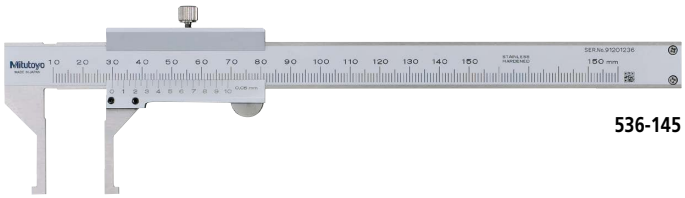

536-145

Point jaw type



536-146

SPECIFICATIONS

Metric Analog model

Order No.	Range (mm)	Graduation (mm)	Maximum permissible error (mm)*		Remarks
			E_{MPE}	S_{MPE}	
536-142	10 - 200	0.05		±0.12	Knife-edge type, Measurable min.
536-145	10.1 - 150			±0.05	Inside groove type, Measurable min.
536-146	20.1 - 150			±0.05	Point jaw type, Measurable min.
536-147	30.1 - 300			±0.08	Point jaw type, Measurable min.
536-148	70.1 - 450			±0.10	Point jaw type, Measurable min.
536-149	70.1 - 600			±0.12	Point jaw type, Measurable min.

* Partial Surface Contact Error, E_{MPE} and Shift Error, S_{MPE} are terms (notations) used in ISO 13385-1:2019.

Mitutoyo reserves the right to change any or all aspects of any product specification, including prices, designs and service content, without notice.

DIMENSIONS

Knife-edge type: 536-142

Unit: mm

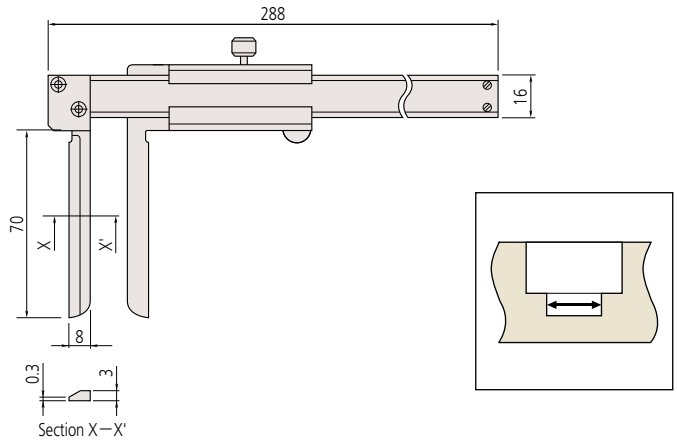

Inside groove type: 536-145

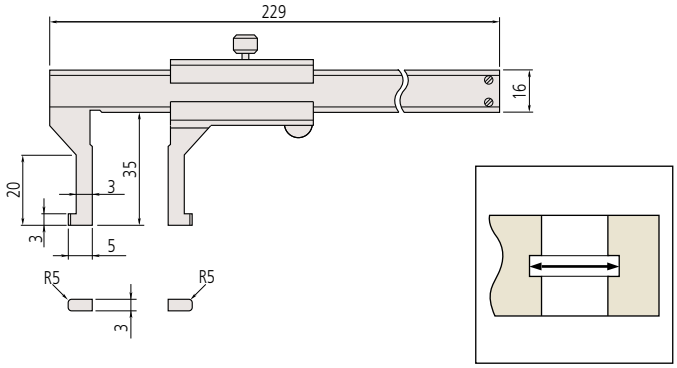

Point jaw type: 536-146, 147, 148, 149

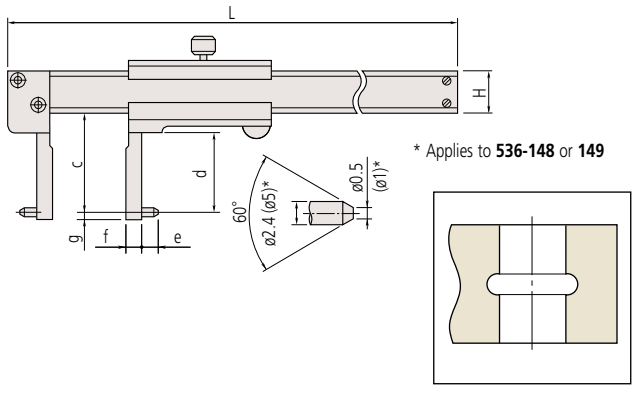

* Applies to **536-148** or **149**

Range (mm)	c	d	e	f	g	H	L
150	38	31	5	5	2	16	229
300	98	89	5	10	2	20	403
450	145	136	10	25	5	25	610
600	145	136	10	25	5	25	750

Note: Models with a measuring range of more than 300 mm have slightly different appearance. For details, contact our Customer Support Center.

D

Mitutoyo reserves the right to change any or all aspects of any product specification, including prices, designs and service content, without notice.

Neck Caliper
SERIES 573, 536 — ABSOLUTE Digimatic and vernier types

- Can measure wall thickness inside bores and recesses.
- Digimatic models are an IP67 Absolute type. Slider action is smooth, firm and comfortable.



573-651-20

SPECIFICATIONS

Metric Digimatic model

Order No.	Range (mm)	Resolution (mm)	Maximum permissible error (mm)*3	
			E_{MPE}	S_{MPE}
573-651-20	0 - 150	0.01	±0.03	
573-652-20*1	0 - 150		±0.03	
573-653-20*2	0 - 150		±0.03	
573-654-20*1*2	0 - 150		±0.03	

Inch / Metric Digimatic model

Order No.	Range	Resolution	Maximum permissible error*3	
			E_{MPE}	S_{MPE}
573-751-20	0 - 6 in/ 0 - 150 mm	0.0005 in/ 0.01 mm	±0.0015 in/ ±0.03 mm	
573-752-20*1	0 - 6 in/ 0 - 150 mm		±0.0015 in/ ±0.03 mm	

- Dust/Water protection level: IP67 (IEC 60529)*4
- Battery: SR44 (1 pc.), **938882**, for initial operational checks (standard accessory)
- Battery life: Approx. 5 years under normal use
- Scale type: ABSOLUTE electromagnetic induction linear encoder
- Max. response speed: Unlimited

*1 Point jaw type
*2 Without thumb roller
*3 Partial Surface Contact Error, E_{MPE} and Shift Error, S_{MPE} are terms (notations) used in ISO 13385-1:2019.
*4 Rustproofing shall be applied after use if caliper was in contact with coolant.

DIMENSIONS

Unit: mm

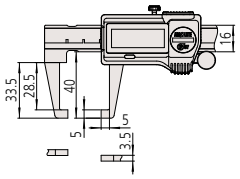

573-651-20, 573-653-20*, 573-751-20
* Without thumb roller
Jaw thickness: 3.5 mm

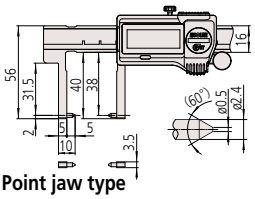

Point jaw type
573-652-20, 573-654-20*, 573-752-20
* Without thumb roller

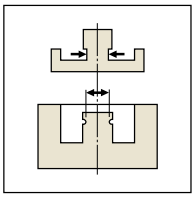

Point jaw type

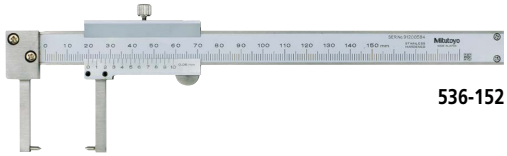

536-152

SPECIFICATIONS

Metric Analog model

Order No.	Range (mm)	Graduation (mm)	Maximum permissible error (mm)*1	
			E_{MPE}	S_{MPE}
536-151	0 - 150	0.05	±0.05	
536-152*2	0 - 150	0.05	±0.05	

*1 Partial Surface Contact Error, E_{MPE} and Shift Error, S_{MPE} are terms (notations) used in ISO 13385-1:2019.
*2 Point jaw type

DIMENSIONS

Unit: mm

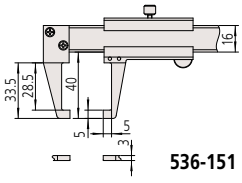

536-151
Jaw thickness: 3 mm

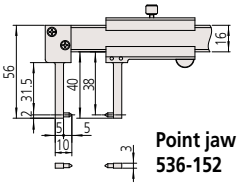

Point jaw type
536-152

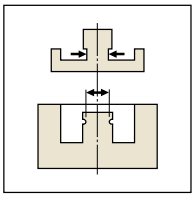

MeasurLink® ENABLED
Data Management Software by Mitutoyo

U-WAVE fit

ABSOLUTE™

Applicable models: **series 573**

IP67

Dust- and Water-Protected
TÜVRheinland CERTIFIED
www.tuv.com ID 0000045042

Measurement example



Optional Accessories (for series 573)

Order No.	Type	Description
05CZA624	A	Connecting cables for **IT/DP/MUX** (1 m)
05CZA625	A	Connecting cables for **IT/DP/MUX** (2 m)
06AFM380A	A	USB Input Tool Direct (2 m)
02AZD790A	A	Connecting cables for **U-WAVE-T** (160 mm)
02AZE140A	A	Connecting cables for **U-WAVE-T** For foot switch
264-620	IP67	**U-WAVE-TC**
264-621	Buzzer	**U-WAVE-TC**
264-624	IP67	**U- WAVE-TCB** Transmitter
264-625	Buzzer	**U- WAVE-TCB** Transmitter
02AZF310	IP67	Connecting unit for **U-WAVE-TC/TCB**

D

Mitutoyo reserves the right to change any or all aspects of any product specification, including prices, designs and service content, without notice.

MeasurLink® ENABLED
Data Management Software by Mitutoyo

U-WAVE fit

ABSOLUTE™

Applicable models: **series 573**

IP67

Dust- and Water-Protected
TÜVRheinland CERTIFIED
www.tuv.com ID 0000045042

Measurement example



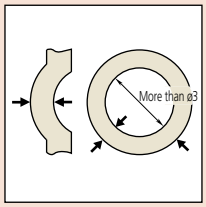

Optional Accessories (for series 573)

Order No.	Type	Description
05CZA624	A	Connecting cables for **IT/DP/MUX** (1 m)
05CZA625	A	Connecting cables for **IT/DP/MUX** (2 m)
06AFM380A	A	USB Input Tool Direct (2 m)
02AZD790A	A	Connecting cables for **U-WAVE-T** (160 mm)
02AZE140A	A	Connecting cables for **U-WAVE-T** For foot switch
264-620	IP67	**U-WAVE-TC**
264-621	Buzzer	**U-WAVE-TC**
264-624	IP67	**U- WAVE-TCB** Transmitter
264-625	Buzzer	**U- WAVE-TCB** Transmitter
02AZF310	IP67	Connecting unit for **U-WAVE-TC/TCB**

Tube Thickness Caliper
SERIES 573, 536 — ABSOLUTE Digimatic and vernier types

- The beam-mounted jaw is a round bar that facilitates measurements of tube wall thickness.
- Digimatic models are IP67 Absolute type. Slider action is smooth, firm and comfortable.
- Allows integration into statistical process control and measurement systems for models with measurement data output connector. (Refer to page A-3.)



573-661-20

SPECIFICATIONS

Metric Digimatic model

Order No.	Range (mm)	Resolution (mm)	Maximum permissible error (mm)*2	
			E_{MPE}	S_{MPE}
573-661-20	0 - 150	0.01	±0.05	
573-662-20*1	0 - 150		±0.05	

Inch / Metric Digimatic model

Order No.	Range	Resolution	Maximum permissible error*2	
			E_{MPE}	S_{MPE}
573-761-20	0 - 6 in / 0 - 150 mm	0.0005 in / 0.01 mm	±0.002 in / ±0.05 mm	

- Dust/Water protection level: IP67 (IEC 60529)*3
- Battery: SR44 (1 pc.), **938882**, for initial operational checks (standard accessory)
- Battery life: Approx. 5 years under normal use
- Scale type: ABSOLUTE electromagnetic induction linear encoder
- Max. response speed: Unlimited

*1 Without thumb roller
*2 Partial Surface Contact Error, E_{MPE} and Shift Error, S_{MPE} are terms (notations) used in ISO 13385-1:2019.
*3 Rustproofing shall be applied after use if caliper was in contact with coolant.

DIMENSIONS

Unit: mm

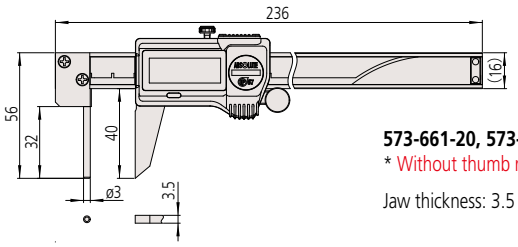

573-661-20, 573-662-20*, 573-761-20
* Without thumb roller
Jaw thickness: 3.5 mm

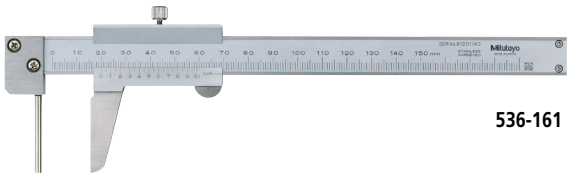

536-161

SPECIFICATIONS

Metric Analog model

Order No.	Range (mm)	Graduation (mm)	Maximum permissible error (mm)*	
			E_{MPE}	S_{MPE}
536-161	0 - 150	0.05	±0.05	

* Partial Surface Contact Error, E_{MPE} and Shift Error, S_{MPE} are terms (notations) used in ISO 13385-1:2019.

DIMENSIONS

Unit: mm

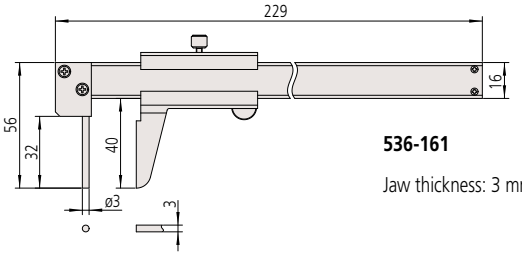

536-161
Jaw thickness: 3 mm

D

Mitutoyo reserves the right to change any or all aspects of any product specification, including prices, designs and service content, without notice.

Mitutoyo

Hook Type Vernier Caliper
SERIES 536

- Allows measurement of stepped inside diameter section of cylinders.
- **536-172** is equipped with a fine-adjustment wheel to enable precise feed and adjustment.

Inside-groove type



536-172

Measurement example

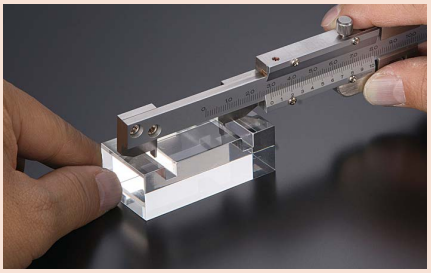

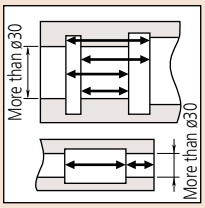

SPECIFICATIONS

Metric

Order No.	Range (mm)*1	Graduation (mm)	Maximum permissible error (mm)*2		Remarks
			E_{MPE}	S_{MPE}	
536-171	0 - 200 (10.1 - 200)	0.02	±0.03	±0.03	—
536-172	0 - 200 (2.1 - 200)		±0.03	±0.03	with fine adjustment

*1 ( ): Dimension in inside measurement
*2 Partial Surface Contact Error, E_{MPE} and Shift Error, S_{MPE} are terms (notations) used in ISO 13385-1:2019.

DIMENSIONS

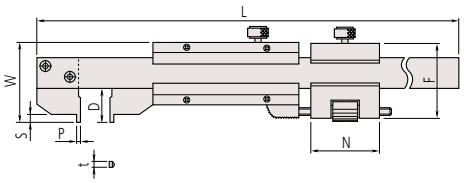

Unit: mm

Order No.	D	F	L	N	P	S	t	W
536-171*1	12	—	320	—	5	4	3.5	28
536-172*2		28.5		20	1			

*1 Inside measuring face is R5.
*2 Inside measuring face is flat.

Swivel Vernier Caliper
SERIES 536 — Moving Jaw type

- The moving jaw can be rotated to measure sectioned shafts.
- Allows step measurement.

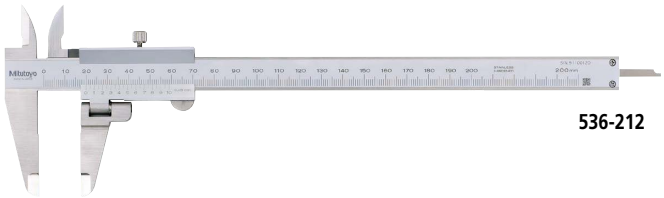

536-212

Measurement example

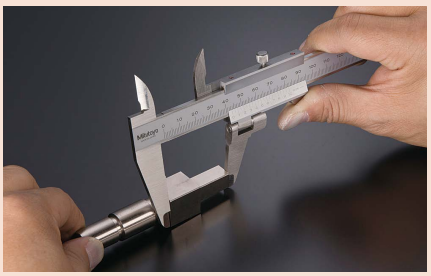

SPECIFICATIONS

Metric

Order No.	Range (mm)	Graduation (mm)	Maximum permissible error (mm)*		Remarks
			E_{MPE}	S_{MPE}	
536-212	0 - 200	0.05	±0.05	±0.07	with depth bar

* Partial Surface Contact Error, E_{MPE} and Shift Error, S_{MPE} are terms (notations) used in ISO 13385-1:2019.

DIMENSIONS

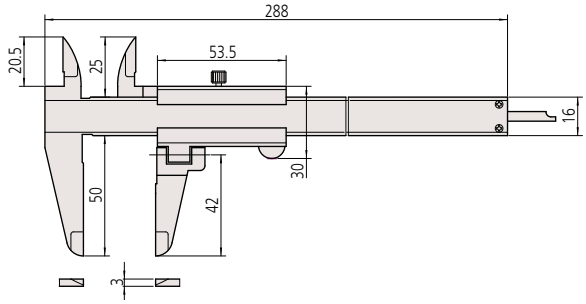

Unit: mm

Mitutoyo reserves the right to change any or all aspects of any product specification, including prices, designs and service content, without notice.

MeasurLink® ENABLED
Data Management Software by Mitutoyo

ABSOLUTE™

Measurement example

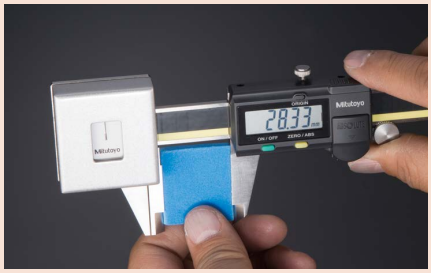

Technical Explanation

Measurement procedure



A consistently low measuring force can be guaranteed by only taking measurements when the pointer is between the two fiducial lines.

Optional Accessories

Order No.	Type	Description
959149	C	Connecting cables for **IT/DP/MUX** (1 m)
959150	C	Connecting cables for **IT/DP/MUX** (2 m)
06AFM380C	C	USB Input Tool Direct (2 m)
02AZD790C	C	Connecting cables for **U-WAVE-T** (160 mm)
02AZE140C	C	Connecting cables for **U-WAVE-T** For foot switch
264-620	IP67	**U-WAVE-TC**
264-621	Buzzer	**U-WAVE-TC**
264-624	IP67	**U-WAVE-TCB** Transmitter
264-625	Buzzer	**U-WAVE-TCB** Transmitter
02AZF300	Buzzer	Connecting unit for **U-WAVE-TC/TCB**

ABSOLUTE Low Force Caliper SERIES 573

- An ABSOLUTE electromagnetic induction linear encoder system is incorporated.
- Enables accurate measurement of plastic parts and other workpieces that are difficult to measure with conventional calipers due to deformation.
- Allows fine feeding easily by using thumb roller.
- Displacement of main scale jaw is 0.3 mm.
- Measuring force: 0.5 N to 1.0 N



573-191-30

SPECIFICATIONS

Metric

Order No.	Range (mm)	Resolution (mm)	Maximum permissible error (mm)*	
			E_{MPE}	S_{MPE}
573-191-30	0 - 180	0.01	±0.05	

Inch / Metric

Order No.	Range	Resolution	Maximum permissible error*	
			E_{MPE}	S_{MPE}
573-291-30	0 - 7 in/0 - 180 mm	0.0005 in/0.01 mm	±0.002 in/±0.05 mm	

- Battery: SR44 (1 pc.), **938882**, for initial operational checks (standard accessory)
- Scale type: ABSOLUTE electromagnetic inductive linear encoder
- Max. response speed: Unlimited

* Partial Surface Contact Error, E_{MPE} and Shift Error, S_{MPE} are terms (notations) used in ISO 13385-1:2019.
Note: Dedicated for outside measurement (depth bar is not fitted).

DIMENSIONS

Unit: mm

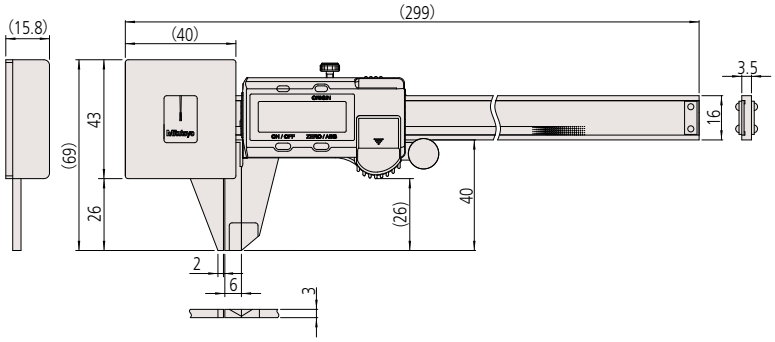

D

MeasurLink® ENABLED
Data Management Software by Mitutoyo
ABSOLUTE™

ABSOLUTE Snap Caliper SERIES 573

- An ABSOLUTE electromagnetic induction linear encoder system is incorporated.
- Snap mechanism allows continuous and easy measurement without moving the slider by using the lever.
- Displacement of snap part is 2 mm.
- Measuring force: 7 N to 14 N

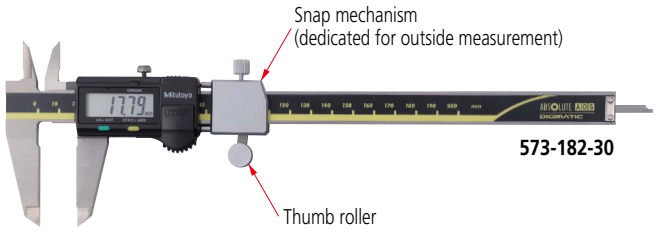

Measurement example

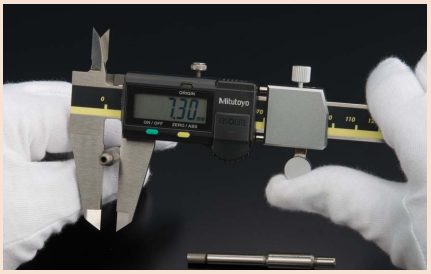

Optional Accessories

Order No.	Type	Description
959149	C	Connecting cables for **IT**/**DP**/**MUX** (1 m)
959150	C	Connecting cables for **IT**/**DP**/**MUX** (2 m)
06AFM380C	C	USB Input Tool Direct (2 m)
02AZD790C	C	Connecting cables for **U-WAVE-T** (160 mm)
02AZE140C	C	Connecting cables for **U-WAVE-T** For foot switch

SPECIFICATIONS

Metric

Order No.	Range (mm)	Resolution (mm)	Maximum permissible error (mm)*	
			E_{MPE}	S_{MPE}
573-181-30	0 - 100	0.01	±0.02	±0.04
573-182-30	0 - 150			

Inch / Metric

Order No.	Range	Resolution	Maximum permissible error*	
			E_{MPE}	S_{MPE}
573-281-30	0 - 4 in/0 - 100 mm	0.0005 in/0.01 mm	±0.001 in/±0.02 mm	±0.002 in/±0.04 mm
573-282-30	0 - 6 in/0 - 150 mm			

- Battery: SR44 (1 pc.), **938882**, for initial operational checks (standard accessory)
- Scale type: ABSOLUTE electromagnetic inductive linear encoder
- Max. response speed: Unlimited

* Partial Surface Contact Error, E_{MPE} and Shift Error, S_{MPE} are terms (notations) used in ISO 13385-1:2019.

DIMENSIONS

Unit: mm

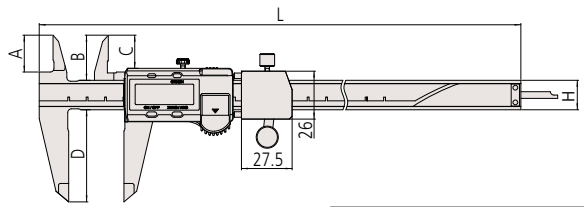

Thickness of outer jaw: 3.5 mm

Range	A	B	C	D	H	L
0 - 100 mm/0 - 4 in	16.5	21	14.5	40	16	233
0 - 150 mm/0 - 6 in	20	24.5	18	50	16	290

Mitutoyo reserves the right to change any or all aspects of any product specification, including prices, designs and service content, without notice.

Quick Guide to Precision Measuring Instruments

Calipers

Nomenclature

Vernier Caliper

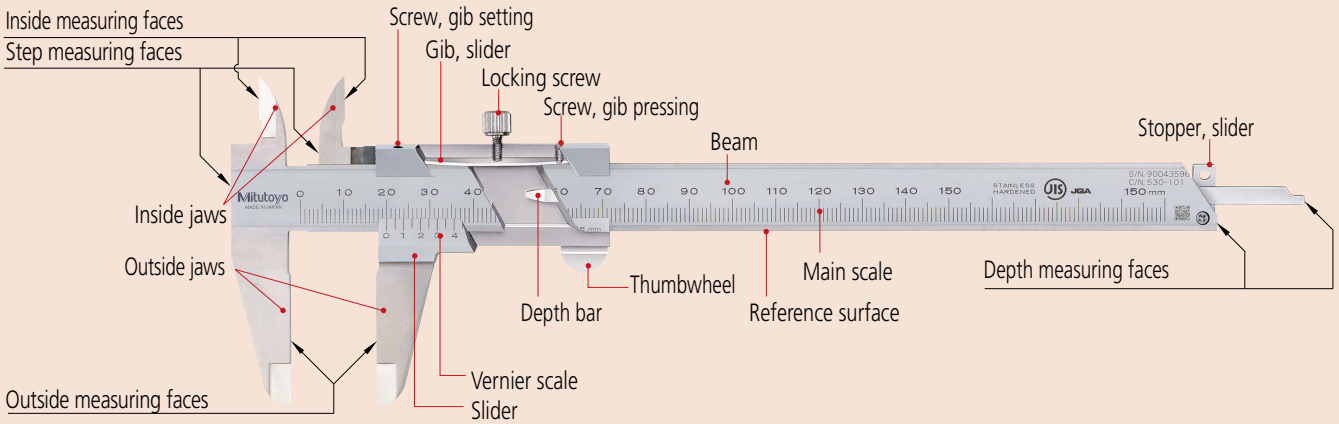

Absolute Digimatic Caliper

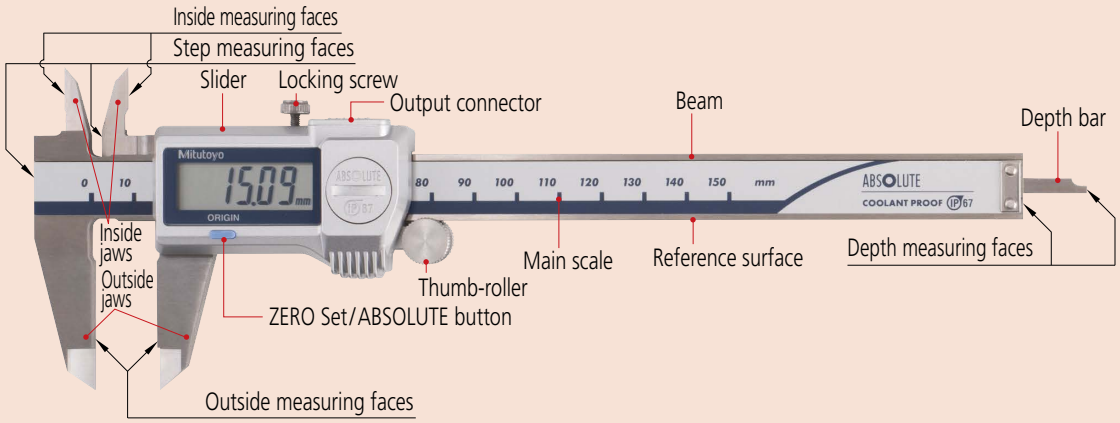

How to Read the Scale

• Vernier Calipers

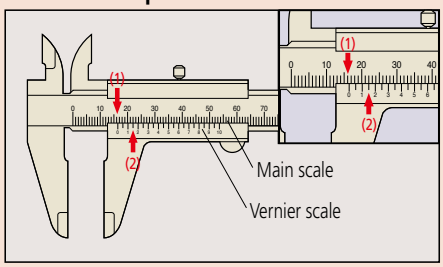

Graduation	0.05 mm
(1) Main scale	16 mm
(2) Vernier	0.15 mm
Reading	16.15 mm

• Dial Calipers

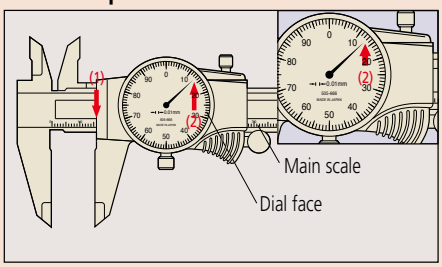

Graduation	0.01 mm
(1) Main scale	16 mm
(2) Dial face	0.13 mm
Reading	16.13 mm

Note: Above left, 0.15 mm (2) is read at the position where a main scale graduation line corresponds with a vernier graduation line.

Measurement examples

1. Outside measurement

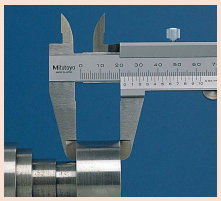

2. Inside measurement

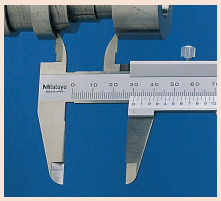

3. Step measurement

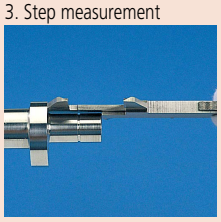

4. Depth measurement

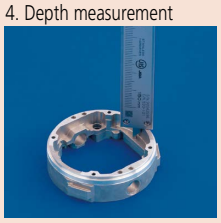

Special Purpose Caliper Applications

Point jaw type

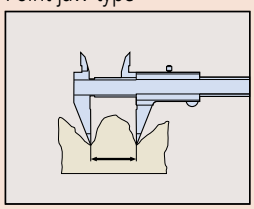

For uneven surface measurement

Offset jaw type

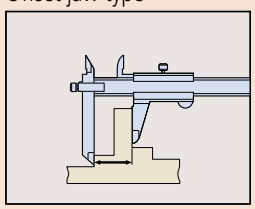

For stepped feature measurement

Depth type

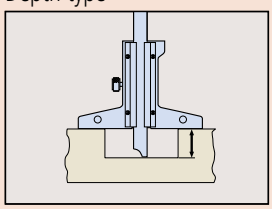

For depth measurement

Blade jaw type

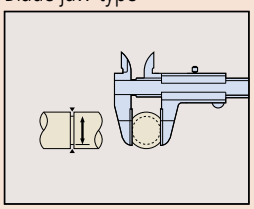

For diameter of narrow groove measurement

D

Mitutoyo

Vernier scale

This is a short auxiliary scale that enables accurate interpolation between the divisions of a longer scale without using mechanical magnification. The principle of operation is that each vernier scale division is slightly smaller than a main scale division, so that successive vernier graduations successively coincide with main scale graduations as one is moved relative to the other. Specifically, n divisions on a vernier scale are the same length as n-1 divisions on the main scale it works with, and n defines the division (or interpolation) ratio. Although n may be any number, in practice it is typically 10, 20, 25, etc., so that the division is a useful decimal fraction. The example below is for n = 10. The main scale is graduated in mm, and so the vernier scale is 9 mm (10 divisions) long, the same as 9 mm (9 divisions) on the main scale. This produces a difference in length of 0.1 mm (1) as shown in figure A (the 1st vernier graduation is aligned with the first main scale graduation). If the vernier scale is slid 0.1 mm to the right as shown in figure B, the 2nd graduation line on the vernier scale moves into alignment with the 2nd line on the main scale (2), and so enables easy reading of the 0.1 mm displacement.

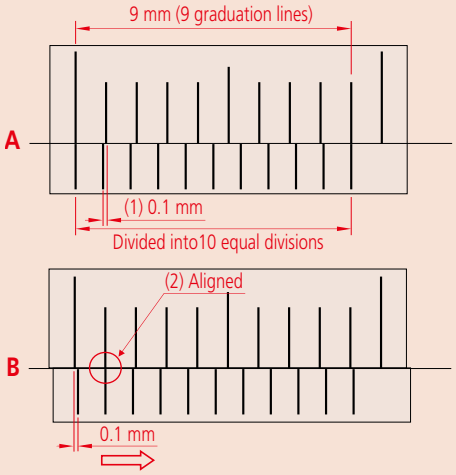

Some early calipers divided 19 divisions on the main scale by 20 vernier divisions to provide 0.05 mm resolution. However, the closely spaced lines proved difficult to read and so, since the 1970s, a long vernier scale that uses 39 main scale divisions to spread the lines is generally used instead, as shown below.

• 19 mm Vernier scale

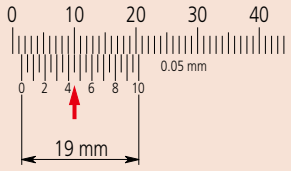

Scale reading 1.45 mm

• 39 mm vernier scale (long vernier scale)

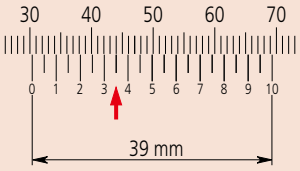

Scale reading 30.35 mm

Calipers were made that gave an even finer resolution of 0.02 mm. These required a 49-division vernier scale dividing 50 main scale divisions. However, they were difficult to read and are now hard to find since Digital calipers with an easily read display and resolution of 0.01 mm appeared.

About Long Calipers

Steel rules are commonly used to roughly measure large workpieces but if a little more accuracy is needed then a long caliper is suitable for the job. A long caliper is very convenient for its user friendliness but does require some care in use. In the first place it is important to realize there is no relationship between resolution and accuracy. For details, refer to the values in our catalog. Resolution is constant whereas the accuracy obtainable varies dramatically according to how the caliper is used.
The measuring method with this instrument is a concern since distortion of the main beam causes a large amount of the measurement error, so accuracy will vary greatly depending on the method used for supporting the caliper at the time. Also, be careful not to use too much measuring force when using the outside measuring faces as they are furthest away from the main beam so errors will be at a maximum here. This precaution is also necessary when using the tips of the outside measuring faces of a long-jaw caliper.

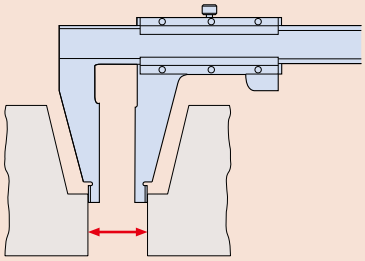

Small hole measurement with an M-type caliper

A structural error d occurs when you measure the internal diameter of a small hole.

øD: True internal diameter
ød : Measured diameter
t_1, t_2: Thickness of the inside jaw
C: Distance between the inside jaws
Δd: Measurement error (øD–ød)

True internal diameter (øD: 5 mm) Unit: mm

t_1+t_2+C	0.3	0.5	0.7
Δd	0.009	0.026	0.047

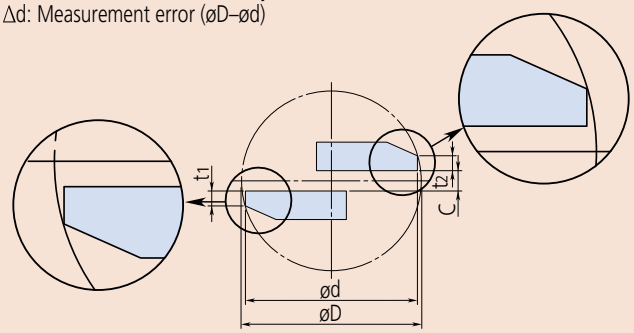

Inside Measurement with a CM-type Caliper

Because the inside measuring faces of a CM-type caliper are at the tips of the jaws the measuring face parallelism is heavily affected by measuring force, and this becomes a large factor in the measurement accuracy attainable. In contrast to an M-type caliper, a CM-type caliper cannot measure a very small hole diameter because it is limited to the size of the stepped jaws, although normally this is no inconvenience as it would be unusual to have to measure a very small hole with this type of caliper. Of course, the radius of curvature on the inside measuring faces is always small enough to allow correct hole diameter measurements right down to the lowest limit (jaw closure). Mitutoyo CM-type calipers are provided with an extra scale on the slider for inside measurements so they can be read directly without the need for calculation, just as for an outside measurement. This useful feature eliminates the possibility of error that occurs when having to add the inside-jaw-thickness correction on a single-scale caliper.

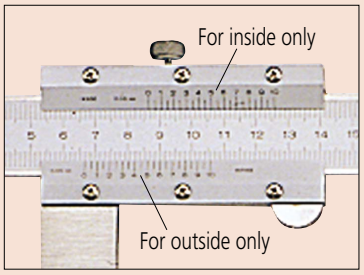

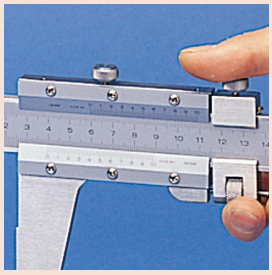

D

General notes on use of the caliper

1. Potential causes of error

A variety of factors can cause errors when measuring with a caliper. Major factors include parallax effects, excessive measuring force due to the fact that a caliper does not conform to Abbe's Principle, differential thermal expansion due to a temperature difference between the caliper and workpiece, and the effect of the thickness of the knife-edge jaws and the clearance between these jaws during measurement of the diameter of a small hole. Although there are also other error factors such as graduation accuracy, reference edge straightness, main scale flatness on the main blade, and squareness of the jaws, these factors are included within the E_{MPE} error tolerances. Therefore, these factors do not cause problems as long as the caliper satisfies the E_{MPE} error tolerances. Handling notes have been added to the JIS so that consumers can appreciate the error factors caused by the structure of the caliper before use. These notes relate to the measuring force and stipulate that "as the caliper does not have a constant-force device, you must measure a workpiece with an appropriate even measuring force. Take extra care when you measure it with the root or tip of the jaw because a large error could occur in such cases."

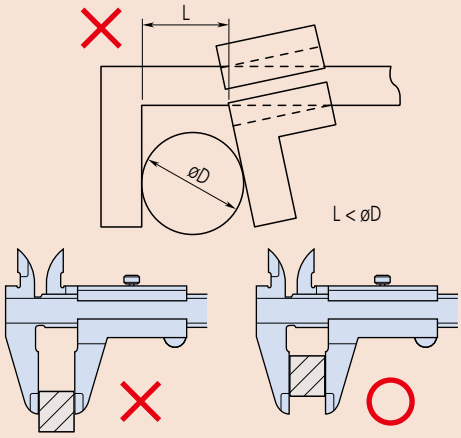

2. Inside measurement

Insert the inside jaw as deeply as possible before measurement.
Read the maximum indicated value during inside measurement.
Read the minimum indicated value during groove width measurement.

3. Depth measurement

Read the minimum indicated value during depth measurement.

4. Parallax error when reading the scales

Look straight at the vernier graduation line when checking the alignment of vernier graduation lines to the main scale graduation lines.
If you look at a vernier graduation line from an oblique direction (A), the apparent alignment position is distorted by ΔX as shown in the figure below due to a parallax effect caused by the step height (H) between the planes of the vernier graduations and the main scale graduations, resulting in a reading error of the measured value. To avoid this error, the JIS stipulates that the step height should be no more than 0.3 mm.

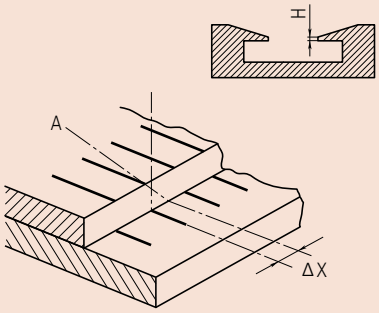

5. Moving Jaw Tilt Error

If the moving jaw becomes tilted out of parallel with the fixed jaw, either through excessive force being used on the slider or lack of straightness in the reference edge of the beam, a measurement error will occur as shown in the figure. This error may be substantial due to the fact that a caliper does not conform to Abbe's Principle.

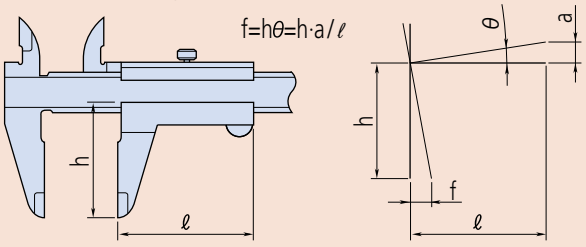

Example: Assume that the error slope of the jaws due to tilt of the slider is 0.01 mm in 50 mm and the outside measuring jaws are 40 mm deep, then the error (at the jaw tip) is calculated as (40/50) ×0.01 mm=0.008 mm.
If the guide face is worn then an error may be present even using the correct measuring force.

6. Relationship between measurement and temperature

The main scale of a caliper is engraved (or mounted on) stainless steel, and although the linear thermal expansion coefficient is equal to that of the most common workpiece material, steel, i.e. (10.2±1) $\times 10^{-6}$/K, note that other workpiece materials, the room temperature and the workpiece temperature may affect measurement accuracy.

7. Handling

Caliper jaws are sharp, and therefore the instrument must be handled with care to avoid personal injury.
Avoid damaging the scale of a digital caliper and do not engrave an identification number or other information on it with an electric marker pen.
Avoid damaging a caliper by subjecting it to impact with hard objects or by dropping it on a bench or the floor.

8. Maintenance of beam sliding surfaces and measuring faces

Wipe away dust and dirt from the sliding surfaces and measuring faces with a dry soft cloth before using the caliper.

9. Checking and setting the origin before use

Clean the measuring surfaces by gripping a sheet of clean paper between the outside jaws and then slowly pulling it out. Close the jaws and ensure that the vernier scale (or display) reads zero before using the caliper. When using a Digimatic caliper, reset the origin (ORIGIN button) after replacing the battery.

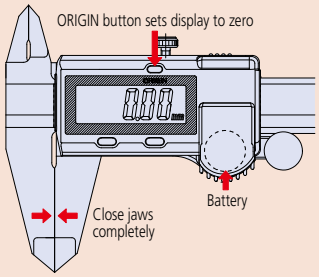

10. Handling after use

After using the caliper, completely wipe off any water and oil. Then, lightly apply anti-corrosion oil and let it dry before storage.
Wipe off water from a waterproof caliper as well because it may also rust.

11. Notes on storage

Avoid direct sunlight, high temperatures, low temperatures, and high humidity during storage.
If a digital caliper will not be used for more than three months, remove the battery before storage.
Do not leave the jaws of a caliper completely closed during storage.

D

Performance evaluation method for the caliper

JIS B 7507 was revised and issued in 2016 as the Japanese Industrial Standards of the caliper, and the "Instrumental error" indicating the indication error of the caliper has been changed to "Maximum permissible error (MPE) of indication".
The "Instrumental error" of the conventional JIS adopts acceptance criteria that the specification range (precision specification) equals acceptance range, and the OK/NG judgment does not include measurement uncertainty. (**Fig. 1**)
The "Maximum permissible error (MPE) of indication" of the new JIS adopts the basic concept of the OK/NG judgment taking into account the uncertainty adopted in the ISO standard (ISO 14253-1).
The verification of conformity and nonconformity to the specifications is clearly stipulated to use the internationally recognized acceptance criteria (simple acceptance) when the specification range equals the acceptance range, and it is accepted that the specification range equals the acceptance range if a given condition considering uncertainty is met.
In this case, the internationally recognized acceptance criterion is ISO/TR 14253-6: 2012. (**Fig. 2**)
The following describes the standard inspection method including the revised content of JIS 2016.

Fig. 1 **Conventional JIS** Instrumental error
JIS B 7507-1993

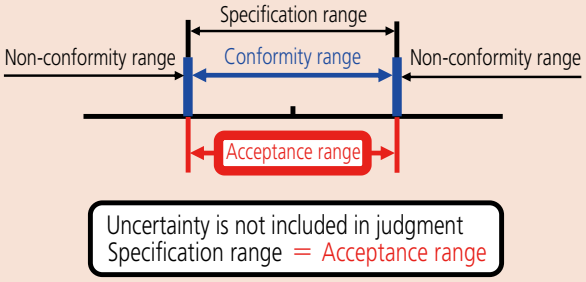

Fig. 2 **New JIS** Maximum permissible error (MPE)
JIS B 7507: 2016 (ISO/TR 14253-6: 2012)

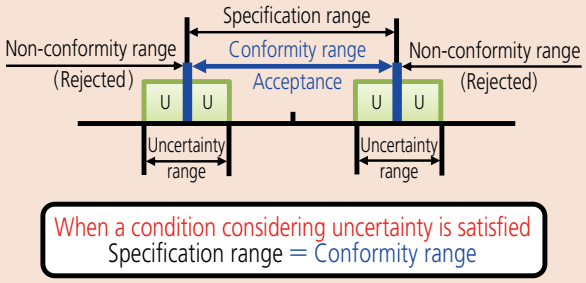

Maximum permissible error of partial measuring surface contact error E_{MPE} [JIS B 7507: 2016]

The partial measuring surface contact error of a caliper is an indication error applied to outside measurement.
Table 1 shows the Maximum permissible error E_{MPE} for various measuring ranges and graduation/resolution of a caliper.
The value can be obtained by inserting a gauge block (or an equivalent standard) between the outside measuring surfaces (**Fig. 3**), measuring it at arbitrary positions between the jaws and then subtracting the dimension of the gage from the maximum or minimum indicated value.

Scale Shift Error S_{MPE} [JIS B 7507: 2016]

The scale shift error in a caliper is an indication error of the inside measurement, depth measurement, etc., if measuring surfaces other than the outside measuring surfaces are used.
The Maximum permissible error S_{MPE} of the indication value for inside measurement is given in **Table 1**. The Maximum permissible error S_{MPE} of depth measurement is obtained by adding 0.02 mm to a value in **Table 1**.
The indication error for inside measurement can be obtained by using gauge blocks (or equivalent standards) and standard jaws from an accessory set to form accurate inside dimensions for calibration (**Fig. 4**), with the error being given by the indicated value minus the gauge block size.

Table 1: Maximum permissible error E_{MPE} of partial measuring surface contact error in a conventional caliper

Unit: mm

Measurement range	Scale interval, graduation or resolution	
	0.05	0.02
50 or less	±0.05	±0.02
Over 50, 100 or less	±0.06	±0.03
Over 100, 200 or less	±0.07	
Over 200, 300 or less	±0.08	±0.04

Note: E_{MPE} includes the measurement error arising from the straightness, flatness and parallelism of the measuring surfaces.

Fig. 3: Determining partial measuring surface contact error

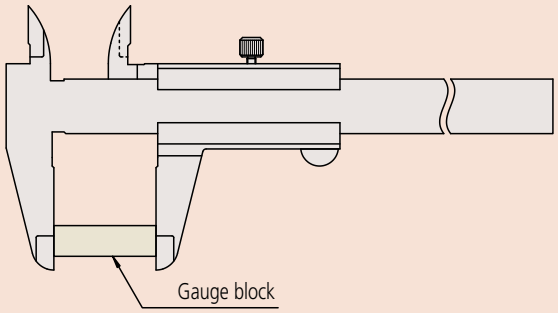

Fig. 4: Determining scale shift error

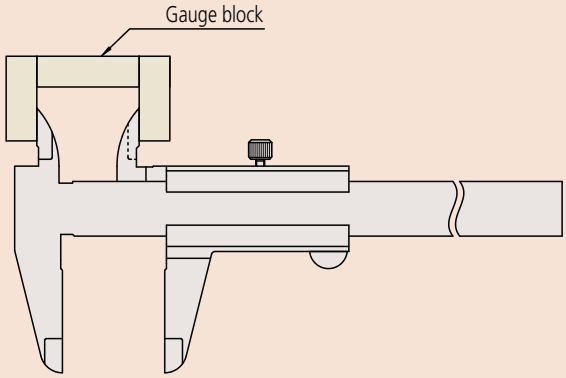

The "Instrumental error" indicating the indication error of JIS has been changed to "Maximum permissible error (MPE) of indication" for the following three models:

- **Vernier Caliper SERIES 530 — Standard model** described on page D-8 (**530-101 530-108 530-109**)
- **Vernier Caliper SERIES 532 — with fine adjustment** described on page D-10 (All models)
- **Vernier Caliper SERIES 531 — with thumb grip** described on page D-11 (All models)

Support for ISO 13385-1:2019

The ISO standard for calipers, ISO 13385-1, was revised and published as ISO 13385-1:2019 in August 2019. The major point of this revision is that it more specifically quantifies the notation and the inspection methods, etc. related to caliper accuracy. This quantification does not affect the quality of calipers manufactured in the past, as they were measured and inspected in an agreed, standardized way in line with certain methods and criteria. The following paragraphs explain points and changes in the revised ISO 13385-1:2019.

Partial surface contact error E(MPE)

The partial surface contact error of a caliper is an indication error applied to outside measurement.
The ISO-2019 standard quantifies for each measuring range the testing method and criteria, such as test points, number of tests, and testing arrangement that were previously left to the manufacturers' own criteria. (**Fig. 1**, **Table 1**)

Ex.) For a caliper with a measuring range of 150 mm, the revised standard requires five or more test points.

(**Fig. 1**)

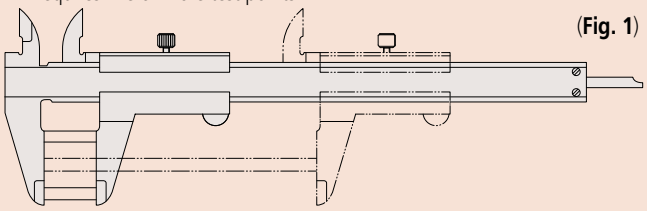

Number of partial surface contact error test points (**Table 1**)

Measuring range (mm)	Minimum number of test points
150	5
300	6
1000	7
1000 or more	8

Furthermore, the revised standards require testing in 90% or more points within the product measuring range as well as testing at the root and tip of the jaw at the maximum/minimum point. Therefore, it is important to conduct tests following the newly defined standard.
The following is an example of measurement for a 150 mm caliper. To comply with the ISO-2019 standard, the minimum number of test points is five for a 150 mm caliper. (**Table 1**)
Five or more test points are necessary to comply with the ISO-2019 standard. These include testing at the maximum and minimum point, as well as at the root and tip of the measuring unit. These test points must add up to a total of five.

Shift Error S(MPE)

The Shift Error for calipers is the error of indication for areas other than the outside measuring face. In the ISO-2019 standard, all measurement errors (inside, depth, step, and I.D. measurement error) other than the outside measurement error (E_{MPE}) are Scale Shift Errors (S_{MPE}). Test points and their number were newly quantified as the type of errors included in the Scale Shift Error were better specified. (**Fig. 2**, **3**, **Table 3**)

(**Fig. 2**)

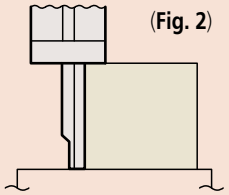

Scale Shift Error measurement example-depth measurement

Ex.) Step and depth measurement

[ISO 13385-1:2019] (**Table 3**)

Test numbering	Test point	Reference standard
1	Less than 50 mm	Gauge block

(**Fig. 3**)

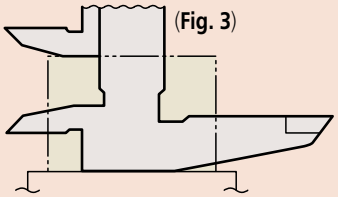

Scale Shift Error measurement example-step measurement

For example, for depth measurement or step measurement, the standard specifically requires one or more test points at less than 50 mm and a testing arrangement using gauge blocks.
(See **Table 3**)

D

Mitutoyo

Accuracy notation change (Regarding MPE notation)

The "instrumental error" used until now will change to "MPE (E_{MPE}/ S_{MPE})". Scale Shift Error (S_{MPE}) will describe the permissible error including those for depth and step.(**Table 4**)

Standards	E_{MPE}	S_{MPE}			
	Outside measurement	Inside measurement	Depth measurement	Step measurement	I.D. measurement
ISO13385-1:2019	Accuracy notation for outside measurement	Permissible values including those for all measurements: inside, depth, step, etc.			
ISO13385-1:2011 (JISB7507:2016)	Accuracy notation for outside measurement	Inside measurement = E_{MPE}	Depth, step, = E_{MPE} + 0.02 mm		

Maximum permissible error includes the repeatability and quantizing error.

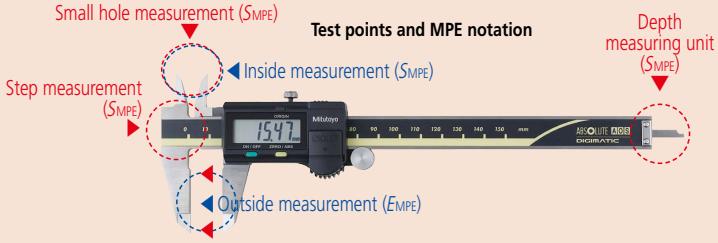

Ex.) 200 mm caliper (**Table 4-1**)

Accuracy ±0.02 mm (conventional notation)

Breakdown	Outside measurement	±0.02
	Inside measurement	±0.02

For depth and step measurement, add 0.02 mm to the outside measurement value.

S_{MPE} is described for measurements other than the outside measurement, but the maximum permissible error for inside measurement remains the same as before.
The permissible values for measurements other than the outside measurement (inside, depth, step, and inside diameter measurement) must be described as S_{MPE} in line with the ISO-2019 standard. Since the permissible values for depth and step measurement are larger than those for inside measurement, this could give an impression that accuracy has suffered. However, this is simply due to the change of notation in accordance with the ISO-2019 standard; neither has the accuracy of the inside measurement deteriorated nor has the product performance changed. (**Table 6-1**, **6-2**)

(**Table 6-1**) Unit: mm

Measured length	Scale interval, graduation or resolution	
	0.05	0.02 or 0.01
50 or less	±0.05	±0.02
Over 50, 100 or less	±0.06	±0.03
Over 100, 200 or less	±0.07	
Over 200, 300 or less	±0.08	±0.04

Note: E_{MPE} includes the measurement error arising from straightness, flatness and parallelism of the measuring surface.

Maximum permissible error E_{MPE} of Partial surface contact error in JIS B 7507

Ex.) Permissible values for a 200 mm caliper

(**Table 6-2**)

Measured length (mm)	Maximum permissible error (MPE)	
	E_{MPE} (mm)	S_{MPE} (mm)
0 ≤ L ≤ 50	±0.02	±0.04
50 ≤ L ≤ 100	±0.02	±0.04
100 ≤ L ≤ 150	±0.02	±0.04
150 ≤ L ≤ 200	±0.02	±0.04

Ex.) Breakdown of S_{MPE}

Inside measurement	Step measurement	Depth measurement	I.D. measurement
±0.02	±0.04	±0.04	+0.01 −0.03

Accuracy notation change (for custom products)

The ISO-2019 standard stipulates the accuracy notation for compliant products. However, nothing is stipulated for custom products that are not compliant with said standard (such as calipers with dedicated measuring faces), so for these products the notation of accuracy is left to the discretion of each manufacturer. Mitutoyo, with many custom calipers, describes MPE for all of its calipers based on the following line of thinking. For example, MPE is "Scale Shift Error (S_{MPE})" for "calipers whose measuring face is other than the zero-setting face = calipers with exclusive measuring method" such as centerline calipers, inside calipers, etc. (**Fig. 5, Table 7**)
Accuracy is described using S_{MPE} measured not using the number of test points stipulated in the ISO-2019 standard, but rather with the same number of test points and testing method as before.

(**Fig. 5**) Non-ISO model (Ex.)

573-605-20



(**Table 7-1**)

Maximum permissible error (MPE)	
E_{MPE} (mm)	S_{MPE} (mm)
—	±0.04

Number of test points: 3

573-646-20



(**Table 7-2**)

Maximum permissible error (MPE)	
E_{MPE} (mm)	S_{MPE} (mm)
—	±0.03

Number of test points: 3

D

Appendix: List of maximum permissible errors (MPE) for typical products

The following list shows MPE for ISO-compliant models. (Table 8)

Series 500	Maximum permissible errors	
Measured length	E_{MPE} (mm)	S_{MPE} (mm)
0 ≤ L ≤ 50	±0.02	±0.04
50 ≤ L ≤ 100	±0.02	±0.04
100 ≤ L ≤ 150	±0.02	±0.04
150 ≤ L ≤ 200	±0.02	±0.04
200 ≤ L ≤ 300	±0.03	±0.05
300 ≤ L ≤ 400	±0.04	±0.06
400 ≤ L ≤ 500	±0.05	±0.07
500 ≤ L ≤ 600	±0.05	±0.07
600 ≤ L ≤ 700	±0.06	±0.08
700 ≤ L ≤ 800	±0.06	±0.08
800 ≤ L ≤ 900	±0.07	±0.09
900 ≤ L ≤ 1000	±0.07	±0.09

Series 505 (0.01 mm)	Maximum permissible errors	
Measured length	E_{MPE} (mm)	S_{MPE} (mm)
0 ≤ L ≤ 50	±0.02	±0.04
50 ≤ L ≤ 100	±0.02	±0.04
100 ≤ L ≤ 150	±0.02	±0.04
150 ≤ L ≤ 200	±0.03	±0.05
200 ≤ L ≤ 300	—	—
300 ≤ L ≤ 400	—	—
400 ≤ L ≤ 500	—	—
500 ≤ L ≤ 600	—	—
600 ≤ L ≤ 700	—	—
700 ≤ L ≤ 800	—	—
800 ≤ L ≤ 900	—	—
900 ≤ L ≤ 1000	—	—

Series 505 (0.02 mm)	Maximum permissible errors	
Measured length	E_{MPE} (mm)	S_{MPE} (mm)
0 ≤ L ≤ 50	±0.02	±0.04
50 ≤ L ≤ 100	±0.03	±0.05
100 ≤ L ≤ 150	±0.03	±0.05
150 ≤ L ≤ 200	±0.03	±0.05
200 ≤ L ≤ 300	±0.04	±0.06
300 ≤ L ≤ 400	—	—
400 ≤ L ≤ 500	—	—
500 ≤ L ≤ 600	—	—
600 ≤ L ≤ 700	—	—
700 ≤ L ≤ 800	—	—
800 ≤ L ≤ 900	—	—
900 ≤ L ≤ 1000	—	—

The reference point (0) is at 10.1 mm for **Series 550** and **551**.

Series 550	Maximum permissible errors	
Measured length	E_{MPE} (mm)	S_{MPE} (mm)
10.1 (0) ≤ L ≤ 50	±0.02	±0.02
50 ≤ L ≤ 100	±0.03	±0.03
100 ≤ L ≤ 200	±0.03	±0.03
200 ≤ L ≤ 300	±0.04	±0.04
300 ≤ L ≤ 400	±0.04	±0.04
400 ≤ L ≤ 450	±0.05	±0.05
450 ≤ L ≤ 500	±0.05	±0.05
500 ≤ L ≤ 600	±0.05	±0.05
600 ≤ L ≤ 700	±0.06	±0.06
700 ≤ L ≤ 800	±0.06	±0.06
800 ≤ L ≤ 900	±0.07	±0.07
900 ≤ L ≤ 1000	±0.07	±0.07

The minimum inside measurement size is 20.1 mm for **550-203**, **205**, and **207**.

Series 551	Maximum permissible errors	
Measured length	E_{MPE} (mm)	S_{MPE} (mm)
10.1 (0) ≤ L ≤ 50	±0.02	±0.02
50 ≤ L ≤ 100	±0.03	±0.03
100 ≤ L ≤ 200	±0.03	±0.03
200 ≤ L ≤ 300	±0.04	±0.04
300 ≤ L ≤ 400	±0.04	±0.04
400 ≤ L ≤ 500	±0.06	±0.06
500 ≤ L ≤ 600	±0.06	±0.06
600 ≤ L ≤ 700	±0.06	±0.06
700 ≤ L ≤ 750	±0.06	±0.06
750 ≤ L ≤ 800	±0.06	±0.06
800 ≤ L ≤ 900	±0.07	±0.07
900 ≤ L ≤ 1000	±0.07	±0.07

The minimum inside measurement size is 20.1 mm for **551-204**, **206**, and **207**.

Series 530	Maximum permissible errors	
Measured length	E_{MPE} (mm)	S_{MPE} (mm)
0 ≤ L ≤ 50	±0.05	±0.07
50 ≤ L ≤ 100	±0.05	±0.07
100 ≤ L ≤ 150	±0.05	±0.07
150 ≤ L ≤ 200	±0.05	±0.07
200 ≤ L ≤ 300	±0.08	±0.10
300 ≤ L ≤ 400	±0.09	±0.11
400 ≤ L ≤ 500	±0.10	±0.12
500 ≤ L ≤ 600	±0.10	±0.12
600 ≤ L ≤ 700	±0.12	±0.14
700 ≤ L ≤ 800	±0.13	±0.15
800 ≤ L ≤ 900	±0.14	±0.16
900 ≤ L ≤ 1000	±0.15	±0.17

Note: Excludes JIS products

MeasurLink® ENABLED
Data Management Software by Mitutoyo

Digimatic Height Gage
SERIES 192 — Multi-function Type with SPC Data Output

- Double-column structure ensures high measuring accuracy.
- Ergonomic base fits comfortably in the hand.
- The drive handle is inclined for better operation.
- **192-663-10**, **192-664-10**, **192-665-10**, **192-670-10**, **192-671-10**, **192-672-10** and **192-673-10** are provided with a long scriber (150 mm).

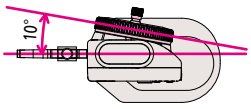





192-663-10

SPECIFICATIONS

Metric

Order No.	Range (mm)	Resolution (mm)	Maximum permissible error E_{MPE} (mm)*	Max. response speed (mm/s)	Height (mm)	Mass (kg)
192-663-10	0 - 300	0.01/0.005 (selectable)	±0.02	500	510	5.7
192-664-10	0 - 600		±0.04		802	8.3
192-665-10	0 - 1000		±0.06		1228	15.7

Inch/Metric

Order No.	Range (in)	Resolution	Maximum permissible error E_{MPE} (in)*	Max. response speed (mm/s)	Height (mm)	Mass (kg)
192-670-10	0 - 12	0.01 mm/0.005 mm (selectable)	±0.001	500	510	5.7
192-671-10	0 - 18		±0.0015		649	7.5
192-672-10	0 - 24	0.0005 in/0.0002 in (selectable)	±0.0015		802	8.3
192-673-10	0 - 40		±0.0025		1228	15.7

- Battery: SR44 (1 pc.), **938882**, for initial operational checks (standard accessory)
- Battery life: Approx. 3,500 hours in continuous use
- Standard Accessories: Scriber **905200** (**192-663-10**, **192-664-10**, **192-665-10**), Scriber clamp **05GZA033**

* Maximum permissible error, E_{MPE} is the term (notation) used in JIS B 7517: 2018, revised based on ISO/TR 14253-6: 2012.

DIMENSIONS

Unit: mm

192-663-10, 192-664-10
( ): **192-664-10**

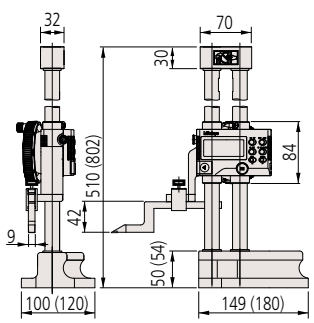

192-665-10

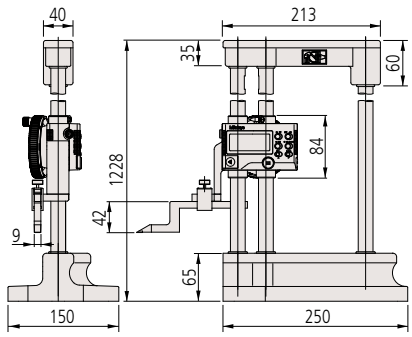

Functions

- Origin-setting (ABS measurement mode):
  Any arbitrary value can be stored as the origin point.
- Zero-setting (INC measurement mode):
  Displayed value can be set to zero at any arbitrary position of the slider.
- Origin restoration:
  Previously set origin is restored when switching back to ABS mode.
- Presetting (ABS INC measurement mode):
  Displayed value can be set to any arbitrary value, including negative values.
- Measuring direction
  Measuring direction can be switched at the press of a button.
- Data hold
  Display value can be held. Reverts to ABS or INC mode when cancelled.
- Alarm: Error message is displayed when overflow or overspeed of displayed value arises and measurement is stopped.
- Data output:
  Allows integration into statistical process control and measurement systems. (Refer to page A-3.)
- Fine and coarse height adjustment through knob and wheel combination.
  Slider height adjustment wheel allows fine and coarse height adjustment.
- Probe-tip diameter compensation: An adjustment is applied to the raw measurement data to compensate for the effect of the size of the spherical contact point used by the bidirectional touch-trigger probe.
- Presetting (2 positions): With two preset functions, two reference heights can be used relative to a surface plate.

Optional Accessories

Order No.	Type	Description
905338	F	Connecting cables for **IT**/**DP**/**MUX** (1 m)
905409	F	Connecting cables for **IT**/**DP**/**MUX** (2 m)
06AFM380F	F	USB Input Tool Direct (2 m)
02AZD790F	F	Connecting cables for **U-WAVE-T** (160 mm)
02AZE140F	F	Connecting cables for **U-WAVE-T** For foot switch

- **Bidirectional touch-trigger probe**: **192-007** (mm), **192-008** (inch)
  Improves accuracy in step, internal thickness, and outside width measurement by minimizing reproducibility error. A bidirectional touch-trigger probe is available as an optional accessory for **192-663-10**,**192-664-10**,**192-665-10**, **192-670-10**,**192-671-10**,**192-672-10** and **192-673-10**.



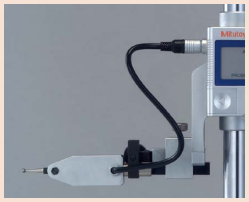

Mitutoyo reserves the right to change any or all aspects of any product specification, including prices, designs and service content, without notice.

Digimatic Height Gage
SERIES 192 — Multi-function Type with SPC Data Output

- Double-column structure ensures high measuring accuracy.
- Ergonomic base fits comfortably in the hand.
- A bidirectional touch-trigger probe is not available as an optional accessory.



192-613-10

SPECIFICATIONS

Metric

Order No.	Range (mm)	Resolution (mm)	Maximum permissible error E_{MPE} (mm)*	Max. response speed (mm/s)	Height (mm)	Mass (kg)
192-613-10	0 - 300	0.01/0.005 (selectable)	±0.02	500	475	4.7
192-614-10	0 - 600		±0.05		802	8.3
192-615-10	0 - 1000		±0.07		1228	15.7

Inch / Metric

Order No.	Range (in)	Resolution	Maximum permissible error E_{MPE} (in)*	Max. response speed (mm/s)	Height (mm)	Mass (kg)
192-630-10	0 - 12	0.01 mm/0.005 mm (selectable)	±0.001	500	475	4.7
192-631-10	0 - 18		±0.002		649	7.5
192-632-10	0 - 24	0.0005 in/0.0002 in (selectable)	±0.002		802	8.3
192-633-10	0 - 40		±0.003		1228	15.7

- Battery: SR44 (1 pc.), **938882**, for initial operational checks (standard accessory)
- Battery life: Approx. 3,500 hours in continuous use
- Standard Accessories: Scriber **07GZA000**
  Scriber clamp **05GZA033**

* Maximum permissible error, E_{MPE} is the term (notation) used in JIS B 7517: 2018, revised based on ISO/TR 14253-6: 2012.

DIMENSIONS

192-613-10, 192-614-10
( ): **192-614-10**

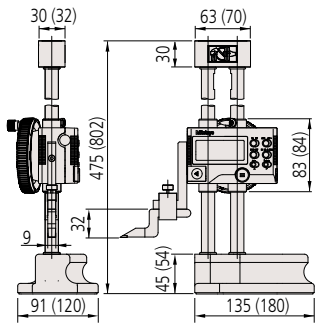

192-615-10

Unit: mm

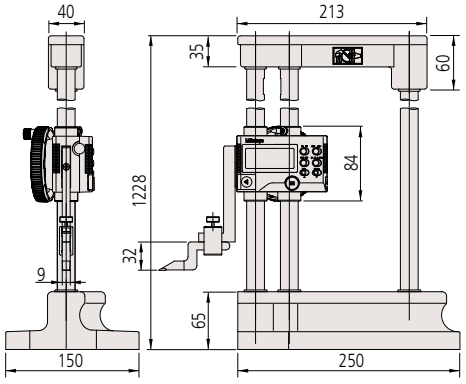

Mitutoyo reserves the right to change any or all aspects of any product specification, including prices, designs and service content, without notice.

MeasurLink® ENABLED
Data Management Software by Mitutoyo

ABSOLUTE™

ABSOLUTE Digimatic Height Gage SERIES 570 — with Ergonomic Base

- Single column, Digimatic Height Gage entry model with large display and bottom for good operability.
- The handle for moving the slider enables smooth vertical movement.
- The highly rigid pillars and large clamp levers provide smooth and reliable workability.



570-402

Measurement example



Functions

- Origin-setting:
  Any convenient reference surface, such as a surface plate, etc., can be stored as the absolute origin point.
- Absolute measurement:
  After power is turned ON, measurement can be started without zero-setting if origin-setting was previously performed. Absolute origin position can be changed by ORIGIN button.
- Incremental measurement: Allows origin setting at any arbitrary position. In this case, the origin point is not stored after turning off the power.
- Data hold
  Display value can be held.
- Data output:
  Allows integration into statistical process control and measurement systems. (Refer to page A-3.)
- Low-voltage alert:
  Low-voltage alert: If the battery voltage becomes low, a "B" appears in the display to alert the user before measurement is no longer possible so that the battery can be changed in good time.

SPECIFICATIONS

Metric

Order No.	Range (mm)	Resolution (mm)	Maximum permissible error E_{MPE} (mm)*	Max. response speed	Mass (kg)
570-402	0 - 300	0.01	±0.03	Unlimited	4.6
570-404	0 - 600		±0.05		6.4

Inch/Metric

Order No.	Range	Resolution	Maximum permissible error E_{MPE}*	Max. response speed	Mass (kg)
570-412	0 to 12 in/0 to 300 mm	0.0005 in/ 0.01 mm	±0.0015 in/±0.03 mm	Unlimited	4.6
570-413	0 to 18 in/0 to 450 mm		±0.0020 in/±0.05 mm		5.9
570-414	0 to 24 in/0 to 600 mm				6.4

Standard Accessories: Scriber clamp **05GZA033**, Scriber **07GZA000**
* Maximum permissible error, E_{MPE} is the term (notation) used in JIS B 7517: 2018, revised based on ISO/TR 14253-6: 2012.

Optional Accessories

Order No.	Type	Description
905338	F	Connecting cables for **IT**/**DP**/**MUX** (1 m)
905409	F	Connecting cables for **IT**/**DP**/**MUX** (2 m)
06AFM380F	F	USB Input Tool Direct (2 m)
02AZD790F	F	Connecting cables for **U-WAVE-T** (160 mm)
902053	—	Clamp (with dovetail groove)*
953638	—	Holding bar*

* For mounting test indicators, etc. (Refer to page F-67 for details.)

DIMENSIONS

Unit: mm

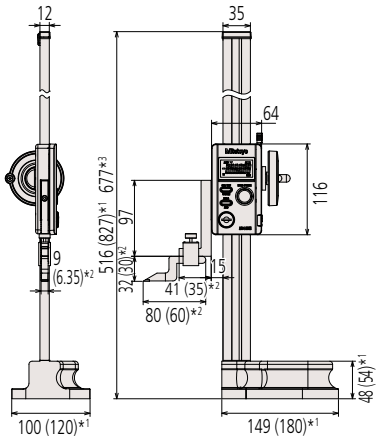

*1 0 to 450 mm, 0 to 600 mm
*2 Inch model
*3 0 to 450 mm

Mitutoyo reserves the right to change any or all aspects of any product specification, including prices, designs and service content, without notice.

MeasurLink® ENABLED
Data Management Software by Mitutoyo

ABSOLUTE™

ABSOLUTE Digimatic Height Gage
SERIES 570 — Standard model

- ABS and INC measurement modes allow efficient operation.
- Rigid structure makes instrument suitable for use in severe work environments.
- The +/- measurement function widens the application range.
- Carbide-tipped scriber is provided as a standard accessory.
- When a dial indicator or test indicator is used with **570-227** and **244**, the dedicated holding bar (**953639**, overall length 50 mm) is recommended for use. However, MPE (Maximum permissible error) may be larger because the measurement point is further from the beam.



570-227

Functions

- Zero-setting
- +/- directional measurement
- Data hold
- Data output
- Presetting
- inch/mm reading (inch/mm models)
- Preset value memory
- Origin restoration
- Low battery voltage alert
- Counting value composition error alert

Standard Accessories

Order No.	Description	Models
900173	Carbide-tipped scriber	**570-227** **570-244**
905200	Carbide-tipped scriber	**570-230** **570-248**
901338	Scriber clamp	**570-227** **570-244**
05GZA033	Scriber clamp	**570-230** **570-248**

Optional Accessories

Order No.	Type	Description
905338	F	Connecting cables (1 m)
905409	F	Connecting cables (2 m)
06AFM380F	F	USB Input Tool Direct (2 m)
02AZD790F	F	Connecting cables for **U-WAVE-T** (160 mm)
02AZE140F	F	Connecting cables for **U-WAVE-T** For foot switch

SPECIFICATIONS

Metric

Order No.	Range (mm)	Resolution (mm)	Fine feed (mm)	Maximum permissible error E_{MPE} (mm)*	Height (mm)	Mass (kg)
570-227	0 - 200	0.01	4	±0.03	355	1.4
570-230	0 - 1000		6	±0.07	1260	16.8

Inch / Metric

Order No.	Range (in)	Resolution	Fine feed (in)	Maximum permissible error E_{MPE} (in)*	Height (mm)	Mass (kg)
570-244	0 - 8	0.0005 in/0.01 mm	0.16	±0.002	355	1.4
570-248	0 - 40		0.24	±0.003	1260	16.8

- Battery: SR44 (1 pc.), **938882**, for initial operational checks (standard accessory)
- Battery life: Approx. 5,000 hours under normal use

* Maximum permissible error, E_{MPE} is the term (notation) used in JIS B 7517: 2018, revised based on ISO/TR 14253-6: 2012.

DIMENSIONS

Unit: mm

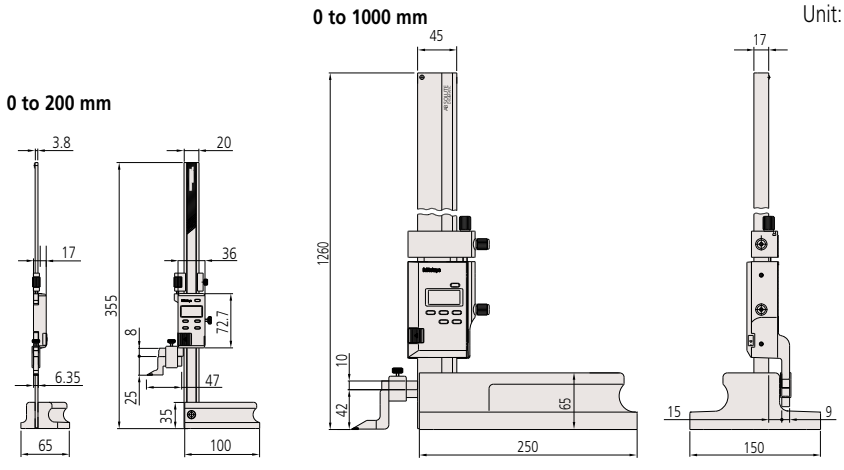

Mitutoyo reserves the right to change any or all aspects of any product specification, including prices, designs and service content, without notice.

Mitutoyo

Vernier Height Gage
SERIES 514, 506 — Standard Height Gage with Adjustable Main Scale

- Fits comfortably in the hand and moves easily on the surface plate.
- Carbide-tipped scriber is provided as a standard accessory.
- The main scale slides and clamps within the column for quick and convenient zero-setting.

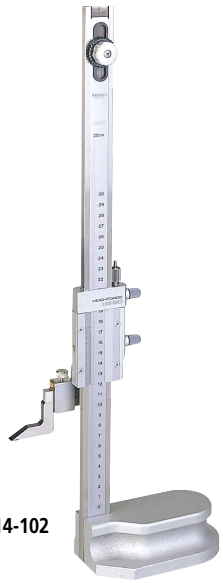

514-102



506-207

Standard Accessories

Order No.	Description	Models
07GZA000	Carbide-tipped scriber	**514-102, 514-104, 514-106, 514-103, 514-105, 514-107**
905200	Carbide-tipped scriber	**514-108, 514-109**
05GZA033	Scriber clamp	**514-102, 514-104, 514-106, 514-108, 514-103, 514-105, 514-107, 514-109**

D

SPECIFICATIONS

Metric

Order No.	Range (mm)	Minimum reading (mm)	Scale adjustment (mm)	Fine feed (mm)	Maximum permissible error E_{MPE} (mm)*	Height (mm)	Mass (kg)
506-207	0 - 200	0.02	—	4	±0.03	341	1.4
514-102	0 - 300		15		±0.04	525	3.1
514-104	0 - 450				±0.05	675	3.4
514-106	0 - 600			7		870	7.4
514-108	0 - 1000		25	6	±0.07	1340	20

Inch / Metric

Order No.	Range (in)	Minimum reading	Scale adjustment (in)	Fine feed (in)	Maximum permissible error E_{MPE} (in)*	Height (mm)	Mass (kg)
506-208	0 - 8	0.001 in/0.02 mm	—	0.16	±0.001	341	1.4
514-103	0 - 12		0.6		±0.002	525	3.1
514-105	0 - 18					675	3.4
514-107	0 - 24			0.27		870	7.4
514-109	0 - 40		1	0.24	±0.003	1340	20

- Reading magnifier (optional): **514-102/104/106: 07GZA003**, **514-108**: **07GZA015**

* Maximum permissible error, E_{MPE} is the term (notation) used in JIS B 7517: 2018, revised based on ISO/TR 14253-6: 2012.

Mitutoyo reserves the right to change any or all aspects of any product specification, including prices, designs and service content, without notice.

DIMENSIONS

Unit: mm

0 to 300 to 0 to 1000 mm

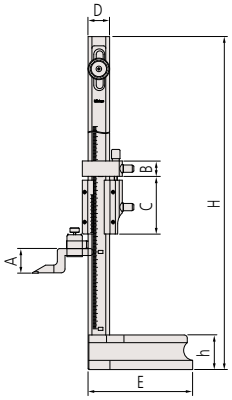

Range (mm)	A	B	C	D	E	H	h
0 - 300	32	20	70	28	135	525	45
0 - 450	32	20	70	28	135	675	45
0 - 600	32	24	85	35	180	870	54
0 - 1000	42	30	110	45	250	1340	65

0 to 200 mm

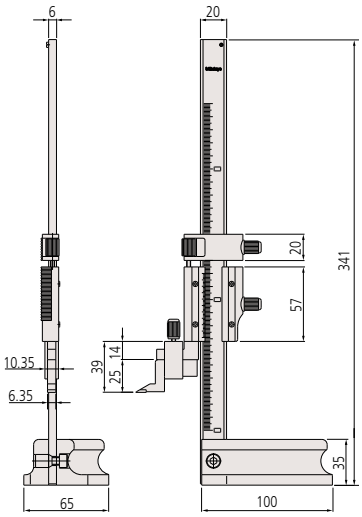

D

Dial Height Gage
SERIES 192 — With digital counter

- Easy and error-free reading with both up and down digital counters as well as a dial.
- Can be zero-set at any arbitrary position.
- Provided with a large feed wheel for easy height adjustment.
- Carbide tipped scriber (**07GZA000**) is attached as standard. (Standard accessory: Scriber clamp **05GZA033**)



192-130

SPECIFICATIONS

Metric

Order No.	Range (mm)	Graduation (mm)	Maximum permissible error E_{MPE} (mm)*	Height (mm)	Mass (kg)
192-130	0 - 300	0.01	±0.03	470	4.2
192-131	0 - 450		±0.05	648	9.2
192-132	0 - 600			798	9.8
192-133	0 - 1000		±0.07	1220	17.0

Inch

Order No.	Range (in)	Graduation (in)	Maximum permissible error E_{MPE} (in)*	Height (mm)	Mass (kg)
192-150	0 - 12	0.001	±0.0015	470	4.2
192-151	0 - 18		±0.002	648	9.2
192-152	0 - 24			798	9.8
192-153	0 - 40		±0.003	1220	17.0

* Maximum permissible error, E_{MPE} is the term (notation) used in JIS B 7517: 2018, revised based on ISO/TR 14253-6: 2012.

DIMENSIONS

Unit: mm

0 to 300 mm (0 to 450 mm, 0 to 600 mm)

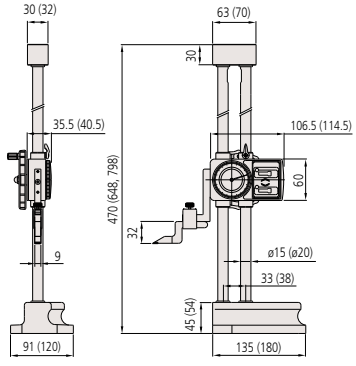

0 to 1000 mm

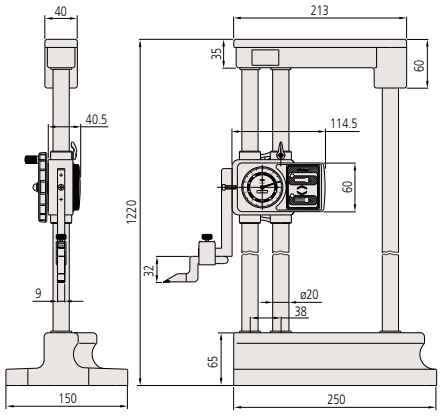

Mitutoyo reserves the right to change any or all aspects of any product specification, including prices, designs and service content, without notice.

CERA Caliper Checker
SERIES 515

- Enables efficient setting and inspection of calipers and height gages.



515-555

Typical applications

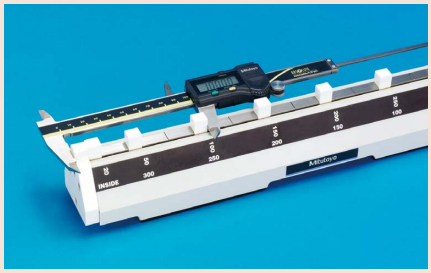

Checking accuracy of caliper (outside measurement)

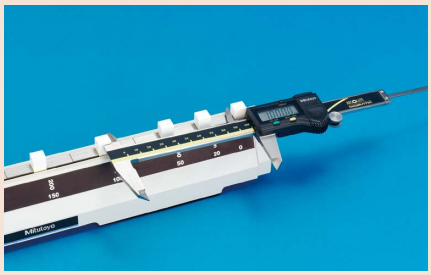

Checking accuracy of caliper (inside measurement)



Checking accuracy of height gage

Optional Accessories

- **602162**: Wooden case for **300 mm**, **12 inch** model
- **602164**: Wooden case for **600 mm** model

SPECIFICATIONS

Metric

Order No.	Range (mm)	Block pitch accuracy*		Parallelism of blocks*		Mass (kg)
		20 - 300 mm	350 - 600 mm	20 - 300 mm	350 - 600 mm	
515-555	0 - 300	±5.0 µm	—	2.0 µm	—	4
515-556-2	0 - 600		±7.0 µm		4.0 µm	8.5

Inch

Order No.	Range (in)	Block pitch accuracy*	Parallelism of blocks*	Mass (kg)
		1 - 12 in	1 - 12 in	
515-565	0 - 12	±0.0002 in	0.00008 in	4

* The block accuracy and the parallelism of blocks are based on the following:
- Outside caliper and height gage: lower end reference plane
- Inside caliper: inside reference plane

DIMENSIONS

Unit: mm

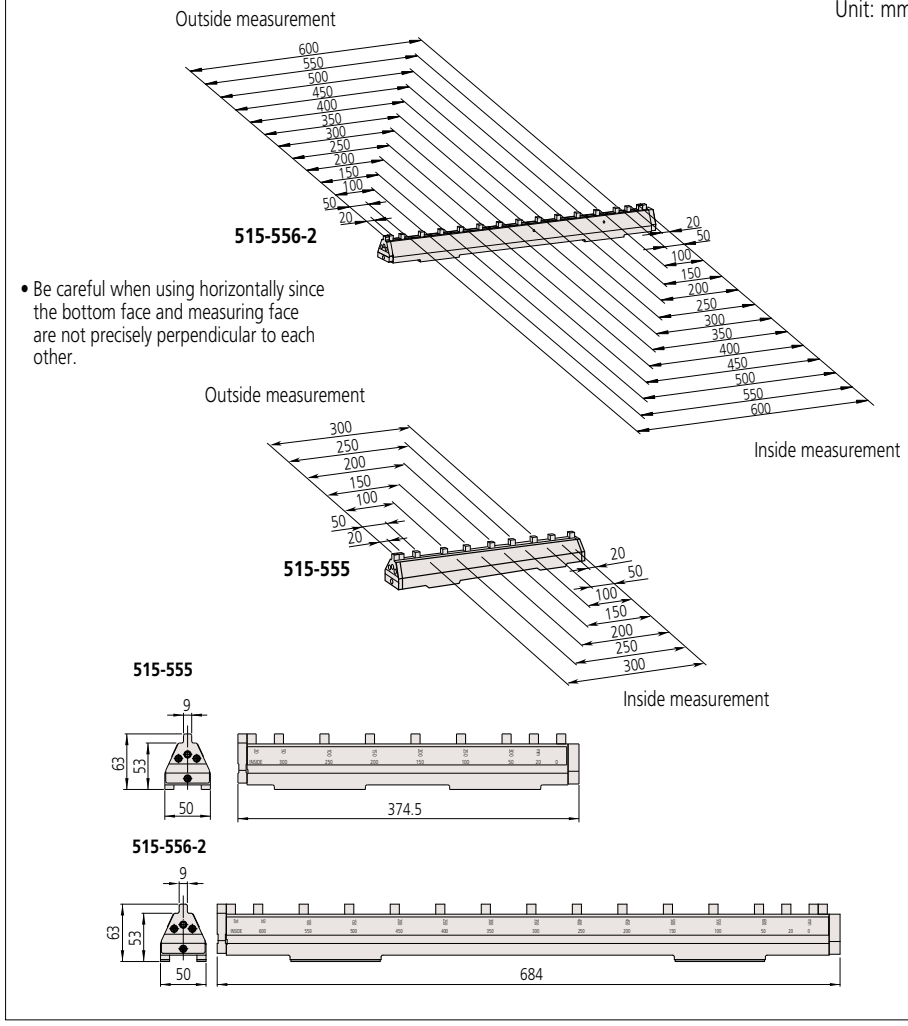

- Be careful when using horizontally since the bottom face and measuring face are not precisely perpendicular to each other.

D

Mitutoyo reserves the right to change any or all aspects of any product specification, including prices, designs and service content, without notice.

Height Gage
Optional accessories for height gages

Scriber
DIMENSIONS

Unit: mm

900173

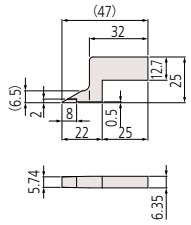

905200

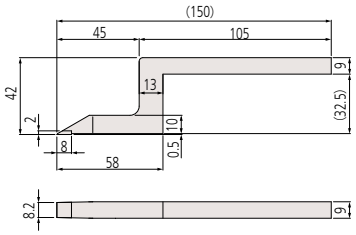

900390

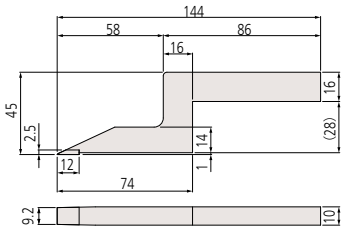

07GZA000

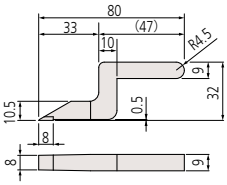

900168

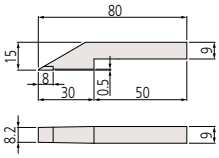

SPECIFICATIONS

D

Metric

Order No.	Applicable Height Gages
07GZA000	192 Series Digimatic Height Gages (**192-613-10, 192-614-10, 192-615-10**)
	570 Series Digimatic Height Gages (**570-302, 570-304**)
	192 Series Dial Height Gages (**192-130, 192-131, 192-132, 192-133**)
	514 Series Vernier Height Gages (**514-102, 514-104, 514-106, 514-103, 514-105, 514-107**)
	574 Series Heightmatic (**574-112-1, 574-111-1, 574-110-1**)
	570 Series Digimatic Height Gages (**570-402**/**404**)
900168	514 Series Vernier Height Gages (**514-160**/**172**)
905200	192 Series Digimatic Height Gages (**192-663-10, 192-664-10, 192-665-10**)
	570 Series Digimatic Height Gage (**570-230**)
	514 Series Vernier Height Gages (**514-108, 514-109**)
900390	514 Series Vernier Height Gage (**514-170**)

Inch

Order No.	Applicable Height Gages
900173	570 Series Digimatic Height Gages (**570-227, 570-244**)
	506 Series Vernier Height Gages (**506-201**/**207**/**204, 506-208**)
900258	192 Series Digimatic Height Gages (**192-630-10, 192-631-10, 192-632-10, 192-633-10**)
	570 Series Digimatic Height Gages (**570-412, 570-413, 570-414**)
	574 Series Heightmatic (**574-212-1, 574-211-1, 574-210-1**)
905201	192 Series Digimatic Height Gages (**192-670-10, 192-671-10, 192-672-10, 192-673-10**)
	570 Series Digimatic Height Gage (**570-248**)

Mitutoyo reserves the right to change any or all aspects of any product specification, including prices, designs and service content, without notice.

Dial Test Indicators

• For information about the attachment of test indicators, refer to page F-75.

Contact Sensor



900872

- Attached to both the workpiece*1 and height gage*2 when measuring heights using a height gage with a scriber, the contact sensor is a convenient detector that gives a lamp display when the scriber touches the workpiece.
  *1 Conductive workpieces only.
  *2 Attach to a conductive part.
- Magnet is incorporated.
- Battery (PR44, 2 pcs. required) is not included.
- For precision Black Granite Surface Plates, refer to page E-47.

Center Probe

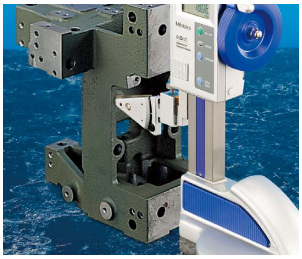



951144

- Allows quick measurement of center-to-center distance between holes.
- Measurable hole diameters: 1 to 38 mm
- Mounting bar section: 9×9 mm

Depth Gage Attachment



900764

- Attaches to a height gage for measuring groove and hole depth.
- Minimum hole diameter: 5.5 mm
- Maximum distance from the bottom of the holding bar to the contact point: 80 mm (metric type), 2.95 in (inch type)
- Dial indicator contact points are usable. (Refer to pages F-57 and F-58.)
- Mounting bar section: 9×9 mm
- Holding bar length: 100 mm

D

Linear Height
SERIES 518 — High Performance 2D Measurement System

- High precision 2D measurement system, indication accuracy (1.1 + 0.6L/600) µm, incorporating a wide range of functions.
- To achieve best-in-class, a high-accuracy reflective-type linear encoder and guide are used.
- Icon-based commands support easy one-key operation.
- Full/Semi-floating mode can be selected. Full for movement, Semi for measuring.
- Equipped with various interfaces for RS-232C communication in addition to connectability to printers and Digimatic measuring instruments.



LH-600E

With power grip



LH-600EG

SPECIFICATIONS

Metric

Model		LH-600E*3 (without power grip)	LH-600EG*3 (with power grip)
Measuring range (Stroke)		0 to 977 mm (600 mm) 0 to 38 in (24 in)	
Resolution		0.0001/0.001/0.01/0.1 mm (selectable) 0.000001/0.00001/0.0001/0.001 in (selectable)	
Accuracy at 20 °C	Indication accuracy*1	(1.1 + 0.6L/600) µm, L=Measured length (mm)	
	Repeatability*1	Plane: 0.4 µm (2 σ), Hole: 0.9 µm (2 σ)	
	Perpendicularity (forward and backward)*2	5 µm (after compensation)	
	Straightness (forward and backward)*2	4 µm (mechanical accuracy)	
Guiding method		Roller bearing	
Driving method		Motor-driven (5, 10, 15, 20, 25, 30, 40 mm/s: 7 steps)/Manual	
Scale unit		Reflective-type linear encoder	
Measuring force		1 N (automatic constant-force function)	
Balancing method		Counter weight balance	
Main unit moving mode		Full-floating (moving)/Semi-floating (measuring) air bearing	
Air source		Built-in compressor	
Monitor		5.7 inch COLOR TFT LCD	
Max. number of programs		50	
Max. number of measured data		60,000 (Max. number of data is 30,000/per program)	
Power supply		AC adapter/Battery (NiMH)	
Battery operation time		Approx. 5 hours (compressor duty cycle 25% max.)	
Battery charging time		Approx. 3 hours (usable during charge)	
Dimensions (W×D×H)		237×438×1013 mm	247×438×1013 mm
Mass		24 kg	24.5 kg
Operating temperature/humidity ranges		5 to 40 °C/20 to 80% RH (non-condensing)	
Storage temperature/humidity ranges		-10 to 50 °C/5 to 90% RH (non-condensing)	

Standard Accessories: **12AAF634** ø5 mm stepped probe, **12AAA715** Ball-diameter corrected block*4, **12AAF674** Auxiliary weight*5
Note: To obtain maximum measurement accuracy, please note the following:
- Use in an environment that is as close as possible to 20 °C, and subject to minimal temperature change over time.
- Use in conjunction with a surface plate of JIS 1 class, or higher, flatness specification.

*1 Guaranteed when using the standard eccentric ø5 probe.
*2 Guaranteed when using the Lever Head (**519-521**), Mu-Checker (**519-561**).
*3 Order No. depends on the destination as shown in the table on the right.
*4 When the correction is performed by using the taper type contact point, the ball-diameter corrected block **12AAA787** (for taper type contact point) is required.
*5 Two auxiliary weights come with the main unit.

Screenshot examples

Measurement screen

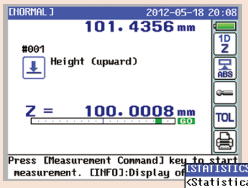

Statistical processing result

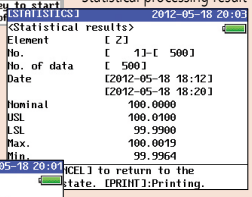

Histogram processing result

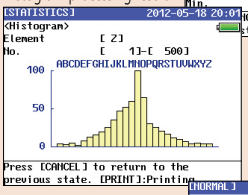

Squareness measurement result: Graphical display*

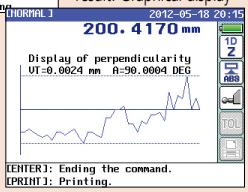

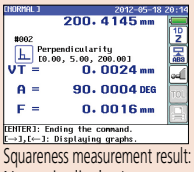

Squareness measurement result: Numeric display*

* To use this function, a Digimatic indicator or a lever head plus a digital Mu-checker are required.

Model without power grip

Order No.	Remarks
518-351-10	Model for Japan, Japanese manual
518-351A-21	Model for North America, English manual
518-351A-22	Model for South America, Spanish manual
518-351D-21	Model for EU, English manual
518-351E-21	Model for U.K., English manual
518-351DC	Model for China, Chinese manual
518-351K	Model for Korea, Korean manual

Model with power grip (Power grip pre-installed model)

Order No.	Remarks
518-352-10	Model for Japan, Japanese manual
518-352A-21	Model for North America, English manual
518-352A-22	Model for South America, Spanish manual
518-352D-21	Model for EU, English manual
518-352E-21	Model for U.K., English manual
518-352DC	Model for China, Chinese manual
518-352K	Model for Korea, Korean manual

Mitutoyo reserves the right to change any or all aspects of any product specification, including prices, designs and service content, without notice.

DIMENSIONS

Unit: mm

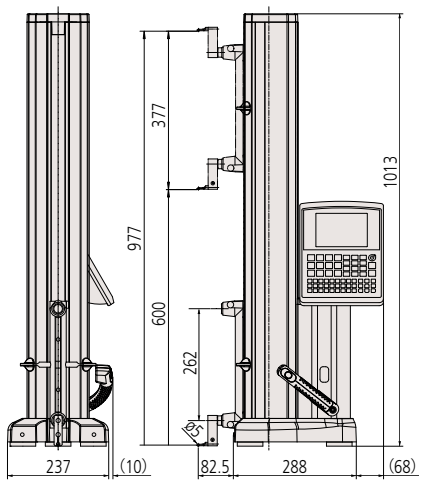

Optional Accessories

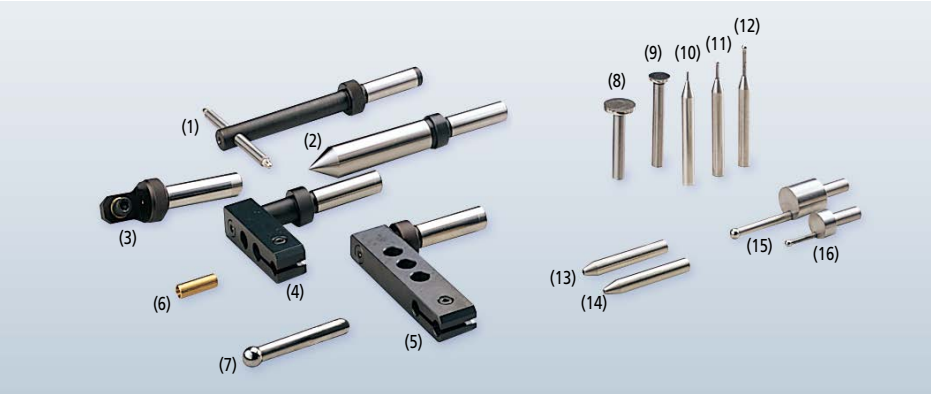

No.	Order No.	Item
(1)	**12AAC072**	Depth probe
(2)	**12AAC073**	Taper probe
(3)	**932361**	Mu-checker lever head holder*1 *1 Two additional pieces of auxiliary weights required (total 4 pcs.)
(4)	**12AAA792**	Dial indicator holder
(5)	**12AAA793**	Probe extension holder
(6)	**226116**	ø6 stem
(7)	**12AAB552**	ø10 mm ball probe (coaxial type)
(8)	**957265**	ø20 mm disk probe
(9)	**957264**	ø14 mm disk probe
(10)	**957261**	ø2 mm ball probe (coaxial type)
(11)	**957262**	ø3 mm ball probe (coaxial type)
(12)	**957263**	ø4 mm ball probe (coaxial type)
(13)	**226118**	M3 CMM stylus adapter*2
(14)	**226117**	M2 CMM stylus adapter*2
(15)	**12AAA789**	ø6 mm ball offset probe
(16)	**12AAA788**	ø4 mm ball offset probe

Order No.	Item
12AAB136	ø10 mm cylindrical probe
12AAF666	ø1 mm ball probe (coaxial type)
12AAF667	ø2 mm ball probe (coaxial type) Ruby ball
12AAF668	ø10 mm ball probe (coaxial type) L: 82 mm
12AAF669	ø10 mm ball probe (coaxial type) L: 120 mm
12AAF670	ø5 mm disk probe
12AAF671	ø10 mm disk probe
12AAF672	ø1 mm ball offset probe
05HAA394	ø5 mm ball offset probe
12AAA879	Sample workpiece
932377A	ø2 mm CMM ball probes
932378A	ø3 mm CMM ball probes
932379A	ø5 mm CMM ball probes
932380A	ø6 mm CMM ball probes
532328	ø10 mm CMM ball probes
532345	ø20 mm CMM disk probes
930803	ø30 mm CMM disk probes
12AAF712	Battery pack

*2 For enabling CMM stylus to be used.
Note: A gauge block may be required for zero-setting depending on the probe and contact point.

Various peripheral devices

Order No.	Item
12AAN048*	Receipt printer (for Japan)
12AAN049*	Receipt printer (for North America)
12AAN050*	Receipt printer (for EU; excluded U.K.)
12AAN051*	Receipt printer (for U.K.)
12AAN052	Receipt paper (10-roll set)
12AAA804	Cable for page printer (2 m)
12AAA807	RS-232C cable (2 m/80 in)
936937	Digimatic cable (1 m)
965014	Digimatic cable (2 m)

* Attachment for fixing the connecting cable is provided as standard.

Mitutoyo reserves the right to change any or all aspects of any product specification, including prices, designs and service content, without notice.

MeasurLink® ENABLED
Data Management Software by Mitutoyo

ABSOLUTE™

PROPRIETARY INSPECTION CERTIFICATE

QM-Height
SERIES 518 — High-Performance Height Gage

- Best-in-class accuracy ±(2.4 + 2.1L/600) µm
- With/Without air-floating structure model. The function enables smooth movement on the surface plate.
- Easy-to-view, simple control panel enables most measurements to be made with a single keystroke.
- Eco-friendly product, operable for approximately 1,200 hours with four AA alkaline batteries.
  (Four commercially available nickel hydride batteries can also be used.)



518-246

SPECIFICATIONS

Order No.	Metric / Inch/Metric	518-240 / 518-241	518-242 / 518-243	518-244 / 518-245	518-246 / 518-247
Measuring range (stroke)		0 to 465 mm (350 mm/14 in)	0 to 715 mm (600 mm/24 in)	0 to 465 mm (350 mm/14 in)	0 to 715 mm (600 mm/24 in)
Resolution	Metric	0.001 mm/0.005 mm (Selectable)			
	Inch/Metric	0.001/0.005 mm 0.00005/0.0001/0.0002 in (Selectable)			
Accuracy at 20 ˚C	Indication accuracy*1	± (2.4 + 2.1L/600) µm			
	Repeatability*1	2 σ ≤ 1.8 µm			
Perpendicularity*2 (20 ˚C)		7 µm	12 µm	7 µm	12 µm
Guiding method		Roller bearing			
Drive method		Manual (wheel)			
Measurement principle		Electromagnetic induction absolute encoder			
Measuring force		1.5±0.5 N			
Data output ports		Digimatic/USB*3			
Air-floating system		Not included		Included (for positioning only)*4	
Power supply		Alkaline AA/LR6 batteries×4 (standard accessories)/AC adapter (optional accessory)*5/ Supports NiMH (HR6) rechargeable batteries×4			
Battery life guidelines*6		Approx. 1,200 hours (without using the air-floating system)			
		Approx. 90 hours (when using the air-floating system)			
Mass		25 kg	29 kg	26 kg	30 kg
Dimensions (W×D×H)		Stroke 350 mm type: 280×273×784 mm Stroke 600 mm type: 280×273×1016 mm			
Operating temperature range (recommended)		0 to 40 ˚C (10 to 30 ˚C)			
Operating humidity range		20 to 80% RH (non-condensing)			
Storage temperature range		-10 to 50 ˚C			
Storage humidity range		5 to 90% RH (non-condensing)			

- Standard Accessories: **05HZA148** ø5 mm stepped probe, **12AAA715** Probe diameter calibration block, Alkaline batteries×4 (AA/LR6)

*1 The indication accuracy and repeatability represent the values obtained from the height measurement of a flat surface using the standard holder with ø5 ball contact point. In the case of diameter, minimum (maximum) value, circle pitch or difference measurement, measuring errors may be larger than the accuracy ratings listed in the table due to variations in measuring force during a scanning measurement, which differs from height measurement.

*2 Indicates the value obtained from the measurement of a straight surface placed perpendicular to the the base reference surface using the Lever Head (**519-521**) and Mu-checker (**519-551**).

*3 Requires special communication driver. Consult your local Mitutoyo Sales Office for details. These can be downloaded from the Mitutoyo web site. **https://www.mitutoyo.co.jp/eng/contact/products/usb/index.html**

*4 When using a model with the air-floating system, it is advisable to use a JIS 1 class, or higher, surface plate. Using on surfaces with scratches or unevenness may prevent the system operating to the specified performance.

*5 The AC adapter cannot be used to recharge rechargeable batteries.

*6 Battery life depends on the operating conditions. In particular, it is more economical to use the optional AC adapter to power the instrument if the application requires prolonged use of the air-floating system.

Measurement example

- Height measurement

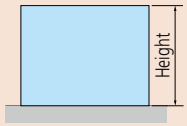



- ID measurement

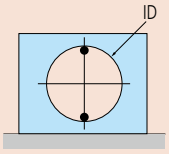

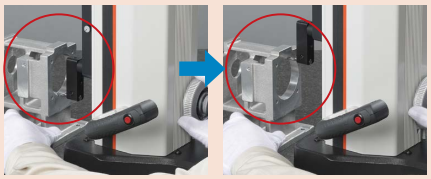

- Runout measurement

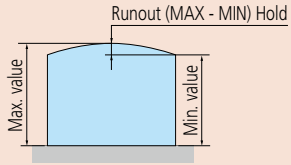

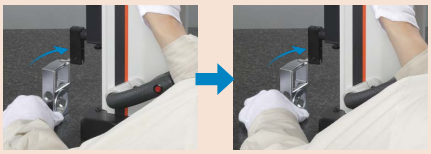

Mitutoyo reserves the right to change any or all aspects of any product specification, including prices, designs and service content, without notice.

DIMENSIONS

Unit: mm

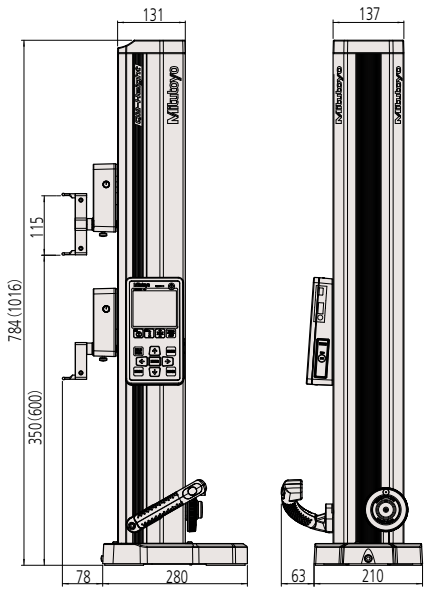

( ): 600 mm stroke type

Optional Accessories

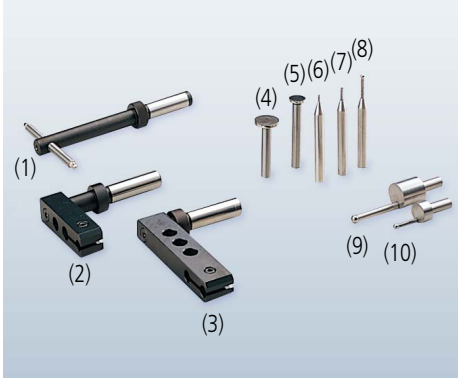

Optional accessories that enable centralized data management

Order No.	Item name
Small printer equipped with Data Logger	
264-505	**DP-1VA LOGGER**
936937	Digimatic connecting cable (1 m)
965014	Digimatic connecting cable (2 m)
06AFZ050	USB cable (A-microB)
Measurement Data Input Unit	
06AFM380D	USB Input Tool Direct **USB-ITN-D**
Measurement data wireless communication system	
02AZD730G	**U-WAVE-T** (Transmission unit) (IP67 type)
02AZD880G	**U-WAVE-T** (Transmission unit) (Buzzer type)
02AZD790D	**U-WAVE-T** dedicated cable (Standard use)
02AZE140D	**U-WAVE-T** dedicated cable (For foot switch)
02AZD810D	**U-WAVE-R** receiver
02AZE990	**U-WAVE** mounting plate
Measurement data collection software for Excel **USB-IT PAK V2.1**	
Measurement data network system **MeasurLink®**	

Contact points for a wide range of measurements

Item	Order No.	Description
	Depth probe	
(1)	**12AAC072**	Depth probe
	Special holder	
(2)	**12AAA792**	Holder for dial indicator
(3)	**12AAA793**	Holder (Long)
	Interchangeable contact points for ø5 mm stepped probe	
(4)	**957265**	ø20 mm disk
(5)	**957264**	ø14 mm disk
(6)	**957261**	ø2 mm ball (coaxial type)
(7)	**957262**	ø3 mm ball (coaxial type)
(8)	**957263**	ø4 mm ball (coaxial type)
(9)	**12AAA789**	ø6 mm ball (eccentric type)
(10)	**12AAA788**	ø4 mm ball (eccentric type)
	AC Adapter	
	06AFZ950JA	AD620JA for Japan/U.S.
	06AFZ950D	AD620D for the EU
	06AFZ950E	AD620E for the UK
	06AFZ950K	AD620K for Korea
	06AEG180DC	AD620DC for China
	Others	
	05HZA143	9×9 mm adapter (clamp underneath is required)
	05GZA033	Clamp (for 9×9 mm adapter)
	05HZA144	6.35×12.7 mm adapter (clamp underneath is required)
	901385	Clamp (for 6.35×12.7 mm adapter)
	05HZA173	Scriber*

* Used for measurements, cannot be used for scribing.
Note: A gauge block may be required for zero-setting depending on the probe or contact point to be used.

D

Mitutoyo reserves the right to change any or all aspects of any product specification, including prices, designs and service content, without notice.

Nomenclature

Vernier Height Gage

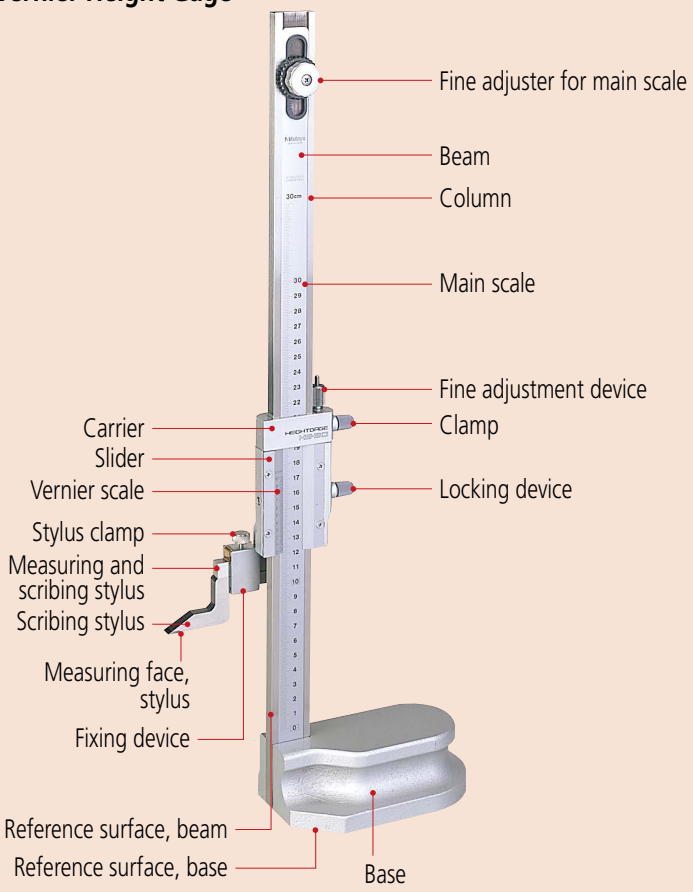

Mechanical Digit Height Gage

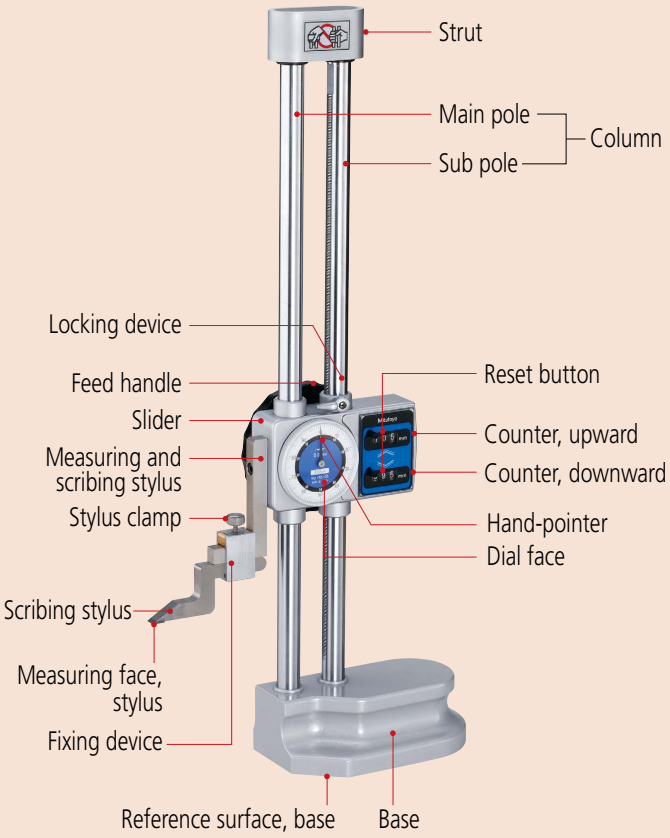

Digimatic Height Gages

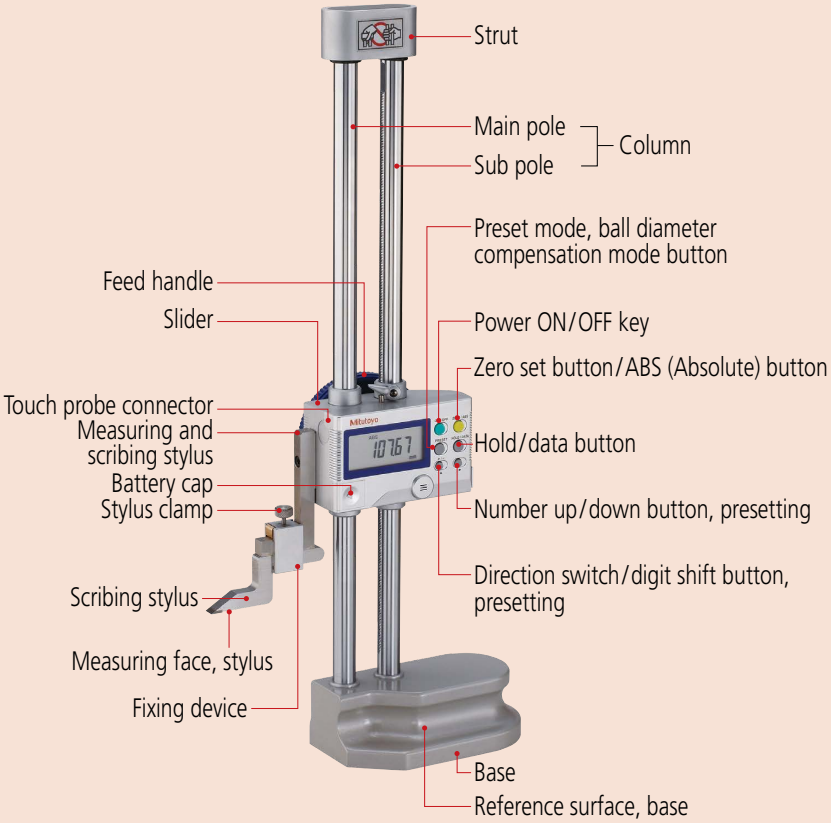




Slider handwheel


Slider clamping lever

How to read

Vernier Height gage

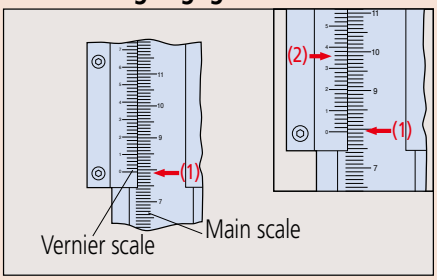

Graduation	0.02 mm
(1) Main scale	79 mm
(2) Vernier	0.36 mm
Reading	79.36 mm

General notes on use of Height Gages

1. Potential causes of error

Like the caliper, the error factors involved include parallax effects, error caused by excessive measuring force due to the fact that a height gage does not conform to Abbe's Principle, and differential thermal expansion due to a temperature difference between the height gage and workpiece.
There are also other error factors caused by the structure of the height gage. In particular, the error factors related to a warped reference edge and scriber installation described below should be studied before use.

2. Reference edge (column) warping and scriber installation

Like the caliper, and as shown in the following figure, measurement errors result when using the height gage if the reference column, which guides the slider, becomes warped. This error can be represented by the same calculation formula for errors caused by nonconformance to Abbe's Principle.

$$f = h\,\theta = h\frac{a}{\ell}$$

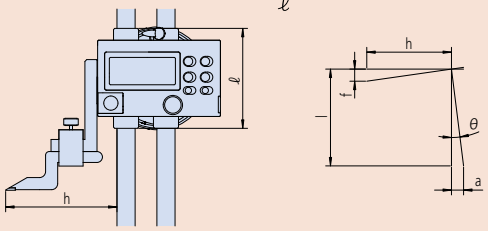

Installing the scriber (or a lever-type dial indicator) requires careful consideration because it affects the size of any error due to a warped reference column by increasing dimension h in the above formula. In other words, if an optional long scriber or lever-type dial indicator is used, the measurement error becomes larger.

Example: Effect of measuring point position
When h is 150 mm, the error is 1.5 times larger than when h is 100 mm.

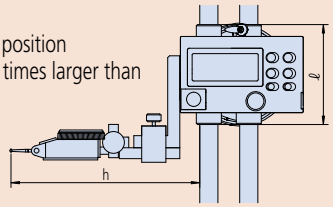

3. Lifting of the base from the reference surface

When setting the scriber height from a gauge block stack, or from a workpiece feature, the base may lift from the surface plate if excessive downwards force is used on the slider, and this results in measurement error. For accurate setting, move the slider slowly downwards while moving the scriber tip to and fro over the gauge block surface (or feature). The correct setting is when the scriber is just felt to lightly touch as it moves over the edge of the surface.
It is also necessary to make sure that the surface plate and height gage base reference surface are free of dust or burrs before use.

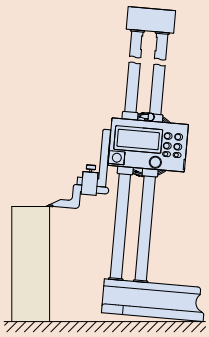

Mechanical Digit Height gage

Measuring upwards from a reference surface

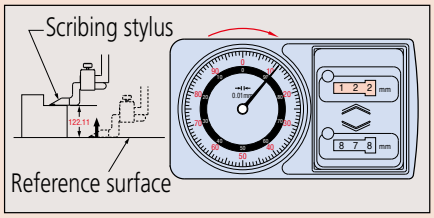

Counter	122	mm
Dial	0.11	mm
Reading	122.11	mm

Measuring downwards from a reference surface

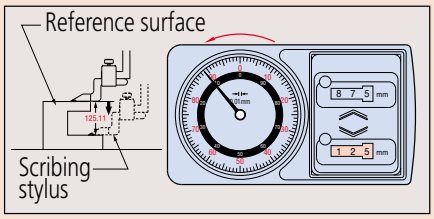

Counter	125	mm
Dial	0.11	mm
Reading	125.11	mm

4. Error due to inclination of the main scale (column)

According to JIS standards, the perpendicularity of the column reference edge to the base reference surface should be better than:

$$\left(0.01+\frac{L}{1000}\right)\text{mm}$$ L indicates the measuring length (unit: mm)

This is not a very onerous specification. For example, the perpendicularity limit allowable is 0.61 mm when L is 600 mm. This is because this error factor has a small influence and does not change the inclination of the slider, unlike a warped column.

5. Relationship between accuracy and temperature

Height gages are made of several materials. Note that some combinations of workpiece material, room temperature, and workpiece temperature may affect measuring accuracy if this effect is not allowed for by performing a correction calculation.

6. The tip of a height gage scriber is very sharp and must be handled carefully if personal injury is to be avoided.

7. Do not damage a digital height gage scale by engraving an identification number or other information on it with an electric marker pen.

8. Carefully handle a height gage so as not to drop it or bump it against anything.

Notes on using the height gage

1. Keep the column, which guides the slider, clean. If dust or dirt accumulates on it, sliding becomes difficult, leading to errors in setting and measuring.
2. When scribing, securely lock the slider in position using the clamping arrangements provided. It is advisable to confirm the setting after clamping because the act of clamping on some height gages can alter the setting slightly. If this is so, allowance must be made when setting to allow for this effect.
3. Parallelism between the scriber measuring face and the base reference surface should be 0.01 mm or better.
Remove any dust or burrs on the mounting surface when installing the scriber or lever-type dial indicator before measurement. Keep the scriber and other parts securely fixed in place during measurement.
4. If the main scale of the height gage can be moved, move it as required to set the zero point, and securely tighten the fixing nuts.
5. Errors due to parallax error are not negligible. When reading a value, always look straight at the graduations.
6. Handling after use: Completely wipe away any water and oil. Lightly apply a thin coating of anti-corrosion oil and let dry before storage.
7. Notes on storage:

- Avoid direct sunlight, high temperatures, low temperatures, and high humidity during storage.
- If a digital height gage will not be used for more than three months, remove the battery before storage.
- If a protective cover is provided, use the cover during storage to prevent dust from adhering to the column.

Height Gage Performance Evaluation Method

JIS B 7517 was revised and issued in 2018 as the Japanese Industrial Standards of the height gage, and the "Instrumental error" indicating the indication error of the height gage has been changed to "Maximum permissible error (MPE) of indication".
The "Instrumental error" of the conventional JIS adopts acceptance criteria that the specification range (precision specification) equals acceptance range, and the OK/NG judgment does not include measurement uncertainty (**Fig. 1**).
The "Maximum permissible error (MPE) of indication" of the new JIS employs the basic concept of the OK/NG judgment taking into account the uncertainty adopted in the ISO standard (ISO 14253-1).
The verification of conformity and nonconformity to the specifications is clearly stipulated to use the internationally recognized acceptance criteria (simple acceptance) when the specification range equals the acceptance range, and it is accepted that the specification range equals the acceptance range if a given condition considering uncertainty is met.
The above said internationally recognized acceptance criterion is ISO/TR 14253-6: 2012 (**Fig. 2**).
The following describes the standard inspection method including the revised content of JIS 2018.

Fig. 1 **Conventional JIS** Instrumental error
JIS B 7517-1993

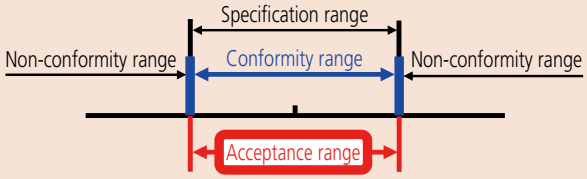

Uncertainty is not included in judgment
Specification range=Acceptance range

Fig. 2 **New JIS** Maximum permissible error (MPE)
JIS B 7517: 2018 (ISO/TR 14253-6: 2012)

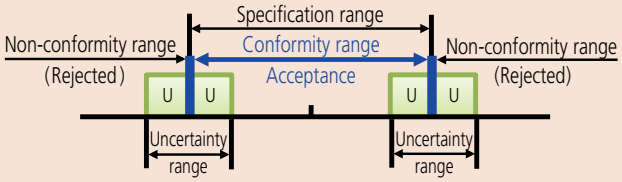

When a condition considering uncertainty is satisfied
Specification range=Conformity range

Maximum permissible error of height measurement E_{MPE} [JIS B 7517: 2018]

The height measurement error in a height gage is the indication error when the reference edge (column) is perpendicular to the base reference surface and the direction of contact is downward. **Table 1** shows the maximum permissible height measurement error E_{MPE}.
E_{MPE} for any desired height is obtained by measuring a gauge block, or equivalent, with a height gage on a precision surface plate (**Fig. 3**) and then subtracting the gauge block size from the measured size.

Table 1: Maximum permissible height measurement error E_{MPE} of a conventional height gage

Unit: mm

Measurement height	Scale interval, graduation or resolution	
	0.05	0.02 or 0.01
50 or less	±0.05	±0.02
Over 50, 100 or less	±0.06	±0.03
Over 100, 200 or less	±0.07	
Over 200, 300 or less	±0.08	±0.04
Over 300, 400 or less	±0.09	
Over 400, 500 or less	±0.10	±0.05
Over 500, 600 or less	±0.11	
Over 600, 700 or less	±0.12	±0.06
Over 700, 800 or less	±0.13	
Over 800, 900 or less	±0.14	±0.07
Over 900, 1000 or less	±0.15	

Note: E_{MPE} includes the measurement error arising from straightness, flatness of the measuring surface and parallelism with the reference surface.

Fig. 3: Determination of height measurement error

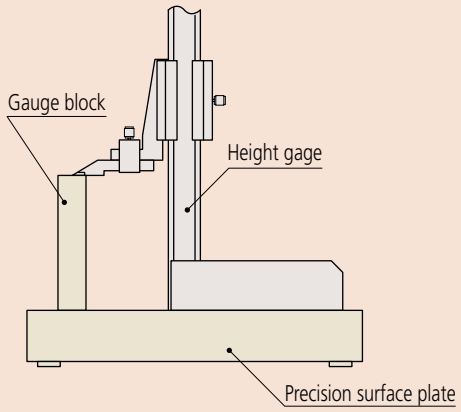

The "Instrumental error" indicating the indication error of JIS has been changed to "Maximum permissible error (MPE) of indication" for the following models:

- **SERIES 192 Digimatic Height Gage** described on page D-49 (All models)
- **SERIES 570 ABSOLUTE Digimatic Height Gage** described on page D-51 (All models)
- **SERIES 570 ABSOLUTE Digimatic Height Gage** described on page D-52 (All models)
- **SERIES 514, 506 Standard Height Gage with Adjustable Main Scale** described on page D-53 (All models)
- **SERIES 192 With digital counter** described on page D-55 (All models)

MeasurLink® ENABLED Data Management Software by Mitutoyo

U-WAVE fit

Depth Micrometer
SERIES 329, 129 — Interchangeable Rod Type

- Interchangeable rods enable a wide-range measurement.
- **Series 329** with data output function (Refer to page A-3).



329-250-30

Functions of series 329

Origin point setting (ABS measurement system):
Resets the ABS origin at the current spindle position to the minimum value of the measuring range and switches to ABS mode.

Zero-setting (INC measurement system):
A brief press on the ZERO/ABS button sets display to zero at the current spindle position and switches to the incremental (INC) measuring mode. A longer press resets to the ABS measuring mode.

Hold:
Pressing the HOLD button freezes the current value in the display. This function is useful for preserving a measurement in situations of poor visibility where the instrument must be moved away from the workpiece before the reading can be recorded.

Data output:
Models equipped with this function have an output port for transferring measurement data to a Statistical Process Control (SPC) system.

Auto power ON/OFF:
The reading on the LCD disappears after this instrument is idle for about 20 minutes, but the reading and measurement mode are retained. Turning the spindle causes the reading to reappear.

Error alarm:
In case of an overflow on the LCD or a computing error, an error message appears on the LCD, and the measuring function stops. This prevents an instrument from giving an erroneous reading. Also, when the battery voltage drops to a certain level, the low-battery-voltage alarm annunciator appears well before the micrometer becomes unusable.

Function lock:
This function allows the PRESET (origin point setting) function and the ZERO (zero-setting) function to be locked to prevent these points being reset accidentally.

Optional Accessories

Order No.	Type	Description
05CZA662	B	Connecting cables (1 m)
05CZA663	B	Connecting cables (2 m)
06AFM380B	B	USB Input Tool Direct (2 m)
02AZD790B	B	Connecting cables for **U-WAVE-T** (160 mm)
02AZE140B	B	Connecting cables for **U-WAVE-T** For foot switch
264-622	IP67	**U-WAVE-TM**
264-623	Buzzer	**U-WAVE-TM**
264-626	IP67	**U-WAVE-TMB** Transmitter
264-627	Buzzer	**U-WAVE-TMB** Transmitter
02AZF310	IP67/ buzzer	Connecting unit for **U-WAVE-TM**

SPECIFICATIONS

Metric

Order No.	Range (mm)	Resolution (mm)	Base (mm)	Spindle feed error (µm)	Flatness of reference surface (base) (µm)	Flatness of measuring face (rod) (µm)	Parallelism between reference face and measuring rod face (µm)	Zero point error of rods (µm)	No. of rods
Digimatic (LCD)									
329-250-30	0 - 150	0.001	101.6x16	3	2	0.3	7	±4	6
329-251-30	0 - 300						10	±6	12

Inch / Metric

Order No.	Range (in)	Resolution	Base (in)	Spindle feed error	Flatness of reference surface(base) (in)	Flatness of measuring face (rod) (in)	Parallelism between reference face and measuring rod face (in)	Zero point error of rods (in)	No. of rods
Digimatic (LCD)									
329-350-30	0 - 6	0.00005 in/ 0.001 mm	4x0.63	0.00015 in/ 3 µm	0.00008	0.000012	0.00035	±0.0002	6
329-351-30	0 - 12	0.0001 in/ 0.001 mm					0.0005	±0.0003	12

Metric

Order No.	Range (mm)	Graduation (mm)	Base (mm)	Spindle feed error (µm)	Flatness of reference surface (base) (µm)	Flatness of measuring face (rod) (µm)	Parallelism between reference face and measuring rod face (µm)	Zero point error of rods (µm)	No. of rods
Analog									
129-154	0 - 25	0.01	63.5x16	3	1.3	0.3	5	3	1
129-155			101.6x16		2		5	3	
129-109	0 - 50		63.5x16		1.3		5	3	2
129-113			101.6x16		2		5	3	
129-110	0 - 75		63.5x16		1.3		6	3	3
129-114			101.6x16		2		6	3	
129-111	0 - 100		63.5x16		1.3		6	4	4
129-115			101.6x16		2		6	4	
129-112	0 - 150		63.5x16		1.3		7	4	6
129-116			101.6x16		2		7	4	
129-152	0 - 300		63.5x16		1.3		10	6	12
129-153			101.6x16		2		10	6	

Inch

Order No.	Range (in)	Graduation (in)	Base (in)	Spindle feed error (in)	Flatness of reference surface(base) (in)	Flatness of measuring face (rod) (in)	Parallelism between reference face and measuring rod face (in)	Zero point error of rods (in)	No. of rods
Analog									
129-129	0 - 2	0.001	4x0.63	0.00015	0.00008	0.000012	0.00025	0.00015	2
129-126	0 - 3		2.5x0.63		0.00005		0.00030	0.00015	3
129-130			4x0.63		0.00008		0.00030	0.00015	
129-127	0 - 4		2.5x0.63		0.00005		0.00030	0.00020	4
129-131			4x0.63		0.00008		0.00030	0.00020	
129-128	0 - 6		2.5x0.63		0.00005		0.00035	0.00020	6
129-132			4x0.63		0.00008		0.00035	0.00020	
129-149	0 - 12		2.5x0.63		0.00005		0.00050	0.00030	12
129-150			4x0.63		0.00008		0.00050	0.00030	

- Battery*: SR44 (1 pc.), **938882**, for initial operational checks (standard accessory)
- Battery life*: Approx. 2.4 years under normal use

* Digimatic models

- Scale type: Electromagnetic induction absolute encoder
- Standard Accessories: **301336** Spanner, **04GAA274** Spanner, **202863** Hex-Spanner

D

Mitutoyo reserves the right to change any or all aspects of any product specification, including prices, designs and service content, without notice.

Mitutoyo

Depth Micrometer
SERIES 329, 129 — Interchangeable Rod Type

Interchangeable rod (Optional Accessories)

(Check and adjust the origin point before measurement)

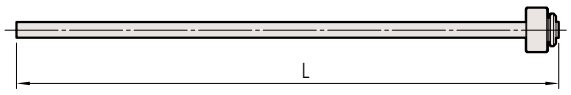

Range (mm)		0 - 25	25 - 50	50 - 75	75 - 100	100 - 125	125 - 150	150 - 175	175 - 200	200 - 225	225 - 250	250 - 275	275 - 300
Analog models	**Order No.**	**983501**	**983503**	**983505**	**983507**	**983509**	**983511**	**983525**	**983527**	**983529**	**983531**	**983533**	**983535**
	L (mm)	104	129	154	179	204	229	254	279	304	329	354	379
Digimatic models	**Order No.**	**983505**	**983507**	**983509**	**983511**	**983525**	**983527**	**983529**	**983531**	**983533**	**983535**	**981781**	**981782**
	L (mm)	154	179	204	229	254	279	304	329	354	379	404	429

Range (in)		0 - 1	1 - 2	2 - 3	3 - 4	4 - 5	5 - 6	6 - 7	7 - 8	8 - 9	9 - 10	10 - 11	11 - 12
Analog models	**Order No.**	**983502**	**983504**	**983506**	**983508**	**983510**	**983512**	**983526**	**983528**	**983530**	**983532**	**983534**	**983536**
	L (mm)	104.3	129.7	155.1	180.5	205.9	231.3	256.7	282.1	307.5	332.9	358.3	383.7
Digimatic models	**Order No.**	**983506**	**983508**	**983510**	**983512**	**983526**	**983528**	**983530**	**983532**	**983534**	**983536**	**981783**	**981784**
	L (mm)	155.1	180.5	205.9	231.3	256.7	282.1	307.5	332.9	358.3	383.7	409.1	434.5

DIMENSIONS

Unit: mm

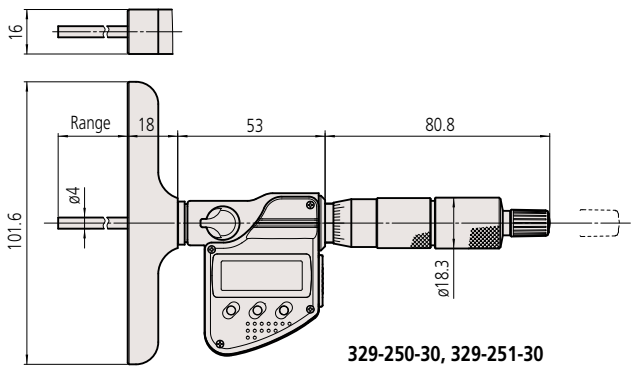

329-250-30, 329-251-30

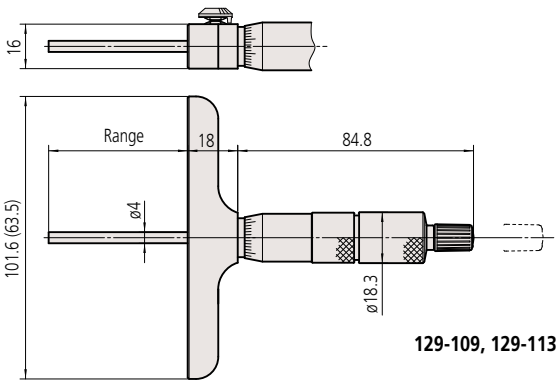

129-109, 129-113

( ): **129-109**

Mitutoyo reserves the right to change any or all aspects of any product specification, including prices, designs and service content, without notice.

Depth Micrometer SERIES 128

Measurement example

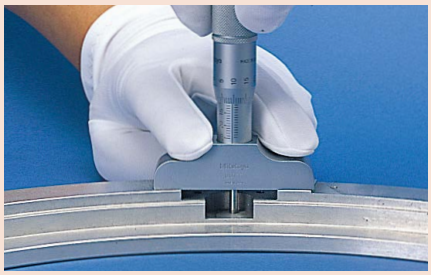

- Measuring rod diameter: 4 mm
- With measuring rod clamp.
- Carbide-tipped measuring rod model is available.
- With ratchet stop for constant measuring force.



128-101

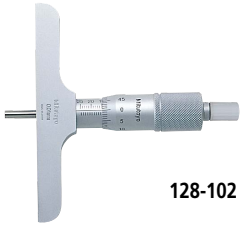

128-102

SPECIFICATIONS

Metric

Order No.	Range (mm)	Graduation (mm)	Maximum permissible error J_{MPE} (µm)	Flatness of reference surface (base) (µm)	Flatness of measuring face (rod) (µm)	Parallelism between reference face and measuring rod face (µm)	Base (mm)
128-101	0 - 25	0.01	±3	1.3	0.3	within 5	63.5x16
128-103*				1.3			
128-102				2			101.6x16
128-104*				2			

Inch

Order No.	Range (in)	Graduation (in)	Maximum permissible error J_{MPE} (in)	Flatness of reference surface (base) (in)	Flatness of measuring face (rod) (in)	Parallelism between reference face and measuring rod face (in)	Base (in)
128-105	0 - 1	0.001	±0.00015	0.00005	0.000012	within 0.00025	2.5x0.63
128-106				0.00008			4x0.63

- Standard Accessories: **301336** Spanner

* With carbide-tipped measuring rod

Depth Micro Checker SERIES 515

Measurement example

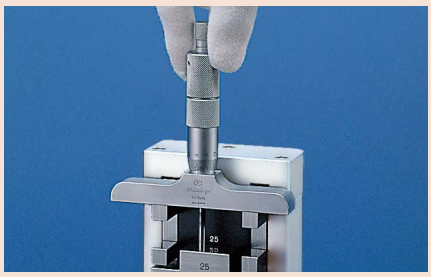

- The Depth Micro Checker is designed to check and help set the range-end points of a depth micrometer.



515-570



515-571

SPECIFICATIONS

Metric

Order No.	Range (mm)	Block pitch accuracy	Anvil block accuracy (µm)
515-570	0 - 150	±(1 + L/150) µm, L=Length to check (mm)	±0.5
515-571	0 - 300		

Inch

Order No.	Range (in)	Block pitch accuracy	Anvil block accuracy (µin)
515-575	0 - 6	±(40 + L/0.15) µin, L=Length to check (in)	±20

DIMENSIONS

Unit: mm

515-570

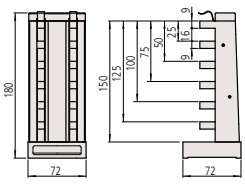

515-571

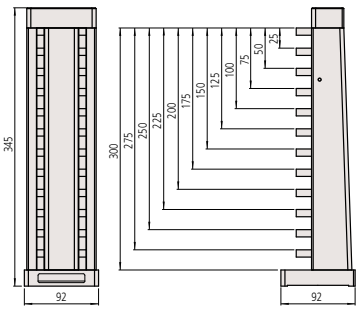

D

Mitutoyo reserves the right to change any or all aspects of any product specification, including prices, designs and service content, without notice.

ABSOLUTE Digimatic Depth Gage SERIES 571

- Coolant proof models achieve IP67 protection level.
- Enables stable depth measurement with a resolution of 0.01 mm.
- Allows integration into statistical process control and measurement systems for models with measurement data output connector. (Refer to page A-3.)
- Optional longer extension bases are available. (Refer to page D-76.)



571-252-20

SPECIFICATIONS

Metric

Order No.	Range (mm)	Resolution (mm)	Base (W×T) (mm)	Maximum permissible error E_{MPE} (mm)*
571-251-20	0 - 150	0.01	100×6	±0.02
571-252-20	0 - 200			
571-253-20	0 - 300		100×6.3	±0.03

Inch / Metric

Order No.	Range (in)	Resolution	Base (W×T) (in)	Maximum permissible error E_{MPE} (in)*
571-261-20	0 - 6	0.0005 in/ 0.01mm	3.93×0.23	±0.001 in/±0.02 mm
571-262-20	0 - 8			
571-263-20	0 - 12		3.93×0.25	±0.0015 in/±0.03 mm

- Battery: SR44 (1 pc.), **938882**. For initial operational checks (standard accessory).
- Battery life: Approx. 5 years

* Maximum permissible error, E_{MPE}, is the term (notation) used in JIS B 7518: 2018, revised based on ISO/TR 14253-6: 2012.

DIMENSIONS

Unit: mm

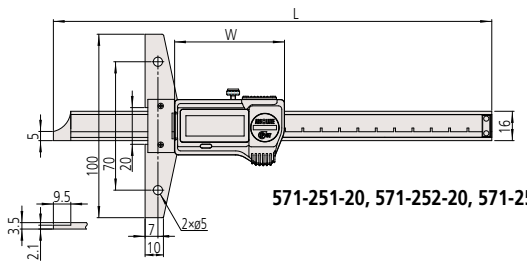

571-251-20, 571-252-20, 571-253-20

Range (mm)	L	W	Base thickness
0 - 150	239	59.2	6
0 - 200	289		6
0 - 300	403	71	6.3

MeasurLink® ENABLED Data Management Software by Mitutoyo

U-WAVE fit

ABSOLUTE™

IP67

Dust- and Water-Protected TÜVRheinland CERTIFIED www.tuv.com ID 0000045042

Measurement example



Optional Accessories

Order No.	Type	Description
05CZA624	A	Connecting cable (1 m)
05CZA625	A	Connecting cable (2 m)
06AFM380A	A	USB Input Tool Direct (2 m)
02AZD790A	A	Connecting cables for **U-WAVE-T** (160 mm)
02AZE140A	A	Connecting cables for **U-WAVE-T** For foot switch
02AZE140C	C	Connecting cables for **U-WAVE-T** For foot switch
264-620	IP67	**U-WAVE-TC**
264-621	Buzzer	**U-WAVE-TC**
264-624	IP67	**U-WAVE-TCB** Transmitter
264-625	Buzzer	**U-WAVE-TCB** Transmitter
02AZF310	IP67	Connecting unit for **U-WAVE-TC/TCB**

D

Mitutoyo reserves the right to change any or all aspects of any product specification, including prices, designs and service content, without notice.

MeasurLink® ENABLED
Data Management Software by Mitutoyo

U-WAVE fit

ABSOLUTE™

Dust- and Water-Protected
TÜVRheinland CERTIFIED
www.tuv.com ID 0000045042

ABSOLUTE Digimatic Depth Gage SERIES 571

- Enables stable depth measurement with a resolution of 0.01 mm.
- Allows integration into statistical process control and measurement systems for models with measurement data output connector. (Refer to page A-3.)
- Optional longer extension bases are available. (Refer to page D-76.)



571-201-30

Optional Accessories

Order No.	Type	Description
959149	C	Connecting cable (1 m)
959150	C	Connecting cable (2 m)
06AFM380C	C	USB Input Tool Direct (2 m)
02AZD790C	C	Connecting cables for **U-WAVE-T** (160 mm)
02AZE140A	A	Connecting cables for **U-WAVE-T** For foot switch
02AZE140C	C	Connecting cables for **U-WAVE-T** For foot switch
264-620	IP67	**U-WAVE-TC**
264-621	Buzzer	**U-WAVE-TC***
264-624	IP67	**U-WAVE-TCB** Transmitter
264-625	Buzzer	**U-WAVE-TCB** Transmitter*
02AZF310	IP67	Connecting unit for **U-WAVE-TC/TCB**

* Cannot be used with **571-20X-10** and **571-21X-10**.

SPECIFICATIONS

Metric

Order No.	Range (mm)	Resolution (mm)	Battery life	Base (W×T) (mm)	Maximum permissible error E_{MPE} (mm)*1
571-201-30	0 - 150	0.01	Approx. 5 years	100×6	±0.02
571-202-30	0 - 200				
571-203-30	0 - 300			100×6.3	±0.03
571-204-10*2	0 - 450	0.01	Approx. 3 years	250×10	±0.05
571-205-10*2	0 - 600				
571-206-10*2	0 - 750				±0.06
571-207-10*2	0 - 1000				±0.07

Inch/Metric

Order No.	Range (in)	Resolution	Battery life	Base (W×T) (in)	Maximum permissible error E_{MPE} (in)*1
571-211-30	0 - 6	0.0005 in/ 0.01mm	Approx. 5 years	3.93×0.23	±0.001 in/±0.02 mm
571-212-30	0 - 8				
571-213-30	0 - 12			3.93×0.25	±0.0015 in/±0.03 mm
571-214-10*2	0 - 18		Approx. 3 years	9.8×0.39	±0.002 in/±0.05 mm
571-215-10*2	0 - 24				
571-216-10*2	0 - 30				±0.0025 in/±0.06 mm
571-217-10*2	0 - 40				±0.0025 in/±0.07 mm

• Battery: SR44 (1 pc.), **938882**. For initial operational checks (standard accessory).
*1 Maximum permissible error, E_{MPE}, is the term (notation) used in JIS B 7518: 2018, revised based on ISO/TR 14253-6: 2012.
*2 Cannot be used with **U-WAVE-TC**

DIMENSIONS

Unit: mm

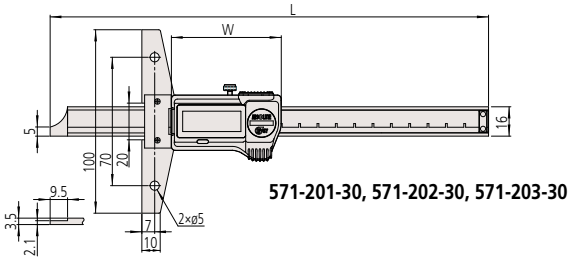

571-201-30, 571-202-30, 571-203-30

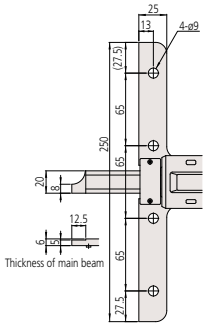

571-204-10, 571-205-10, 571-206-10, 571-207-10

Range (mm)	L	W	Base thickness
0 - 150	239	59.2	6
0 - 200	289		6
0 - 300	403	71	6.3
0 - 450	635	94	10
0 - 600	785		10
0 - 750	935		10
0 - 1000	1200		10

D

Mitutoyo reserves the right to change any or all aspects of any product specification, including prices, designs and service content, without notice.

Mitutoyo

Vernier Depth Gage
SERIES 527

- Standard gage for depth measurement.
- Optional longer extension bases are available. (Except for models with measuring ranges of 600 and 1000 mm). (Refer to page D-76.)

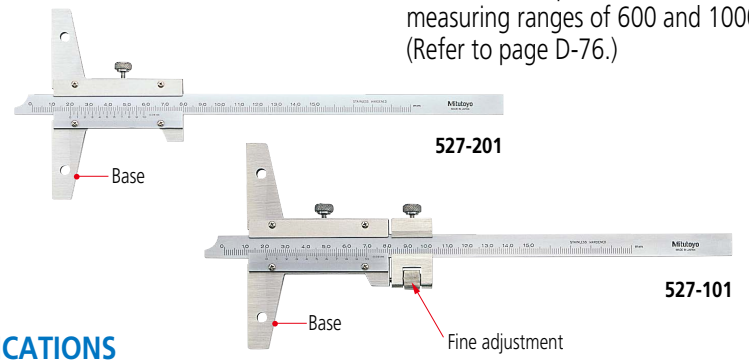

SPECIFICATIONS

Metric

Order No.	Range (mm)	Minimum reading (mm)	Base (W×T) (mm)	Maximum permissible error E_{MPE} (mm)*	Remarks
527-201	0 - 150	0.05	100×6.5	±0.05	—
527-202	0 - 200				—
527-203	0 - 300			±0.08	—
527-204	0 - 600		250×10	±0.10	—
527-205	0 - 1000			±0.15	—

Metric

Order No.	Range (mm)	Minimum reading (mm)	Base (W×T) (mm)	Maximum permissible error E_{MPE} (mm)*	Remarks
527-101	0 - 150	0.02	100×6.5	±0.03	with fine adjsutment
527-102	0 - 200				
527-103	0 - 300			±0.04	
527-104	0 - 600		250×10	±0.05	
527-105	0 - 1000			±0.07	

Inch

Order No.	Range (in)	Minimam reading (in)	Base (W×T) (in)	Maximum permissible error E_{MPE} (in)*	Remarks
527-111	0 - 6	0.001	3.93×0.25	±0.001	with fine adjustment
527-112	0 - 8				
527-113	0 - 12		9.8×0.39	±0.0015	
527-114	0 - 24			±0.002	
527-115	0 - 40			±0.003	

* Maximum permissible error, E_{MPE}, is the term (notation) used in JIS B 7518: 2018, revised based on ISO/TR 14253-6: 2012.

DIMENSIONS

Unit: mm

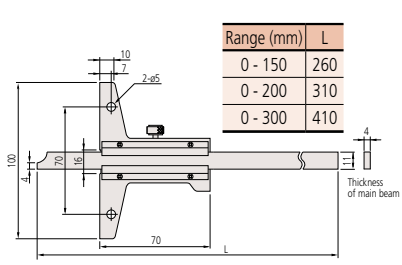

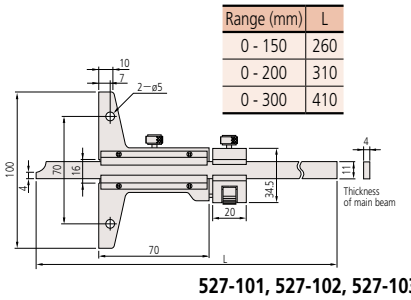

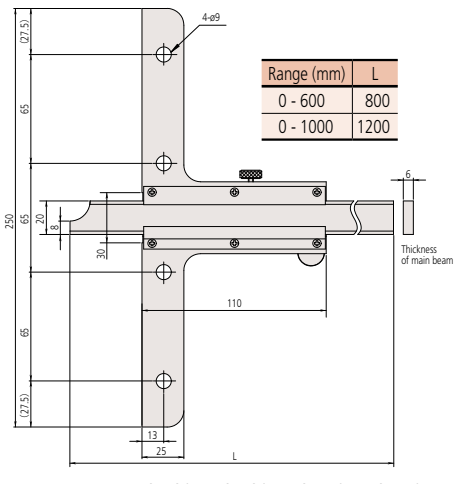

Mitutoyo reserves the right to change any or all aspects of any product specification, including prices, designs and service content, without notice.

Depth Gage
SERIES 527 — Hook End Type Pin End Type

Typical applications

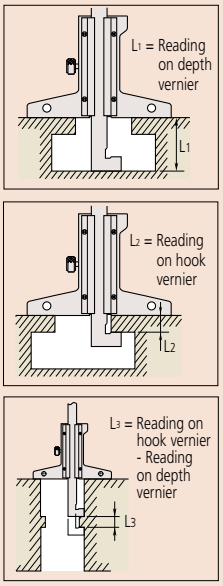

- The end of the main scale is hook-shaped to allow depth and thickness measurements of a projected portion or lip in a hole, in addition to standard depth measurement.
- Depth can be directly measured with the upper vernier of the slider and thickness with the lower vernier.
- Optional longer extension bases are available. (Refer to page D-76.)

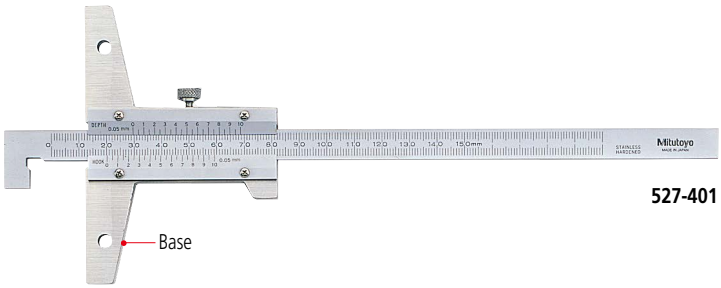

527-401

SPECIFICATIONS

Metric

Order No.	Range (mm): L1 (L2 and L3)	Resolution/Graduation (mm)	Base (W×T) (mm)	Maximum permissible error E_{MPE} (mm)*
527-401	10 - 150 (0 - 150)	0.05	100×6.5	±0.05
527-402	10 - 200 (0 - 200)			
527-403	10 - 300 (0 - 300)			±0.08
527-411	10 - 150 (0 - 150)	0.02		±0.03
527-412	10 - 200 (0 - 200)			
527-413	10 - 300 (0 - 300)			±0.04

• Battery: SR44 (1 pc.), **938882**. For initial operational checks (standard accessory).

* Maximum permissible error, E_{MPE}, is the term (notation) used in JIS B 7518: 2018, revised based on ISO/TR 14253-6: 2012.

DIMENSIONS

Unit: mm

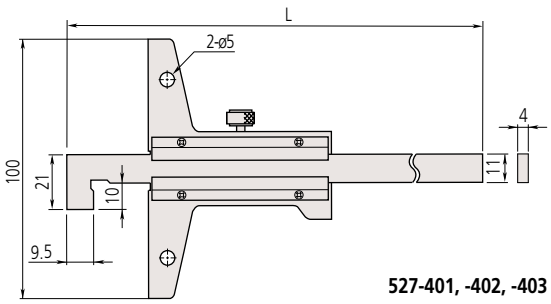

527-401, -402, -403

Range (mm)	L
0 - 150	260
0 - 200	310
0 - 300	410

Mitutoyo reserves the right to change any or all aspects of any product specification, including prices, designs and service content, without notice.

Depth Gage
SERIES 571 — Hook End Type

- The end of the main scale is hook-shaped to allow depth and thickness measurements of a projected portion or lip in a hole, in addition to standard depth measurement.
- Coolant proof models achieve IP67 protection level.
- Optional longer extension bases are available. (Refer to page D-76.)
- The measurement result directly readable by OFFSET function.



571-254-20

SPECIFICATIONS

Metric

Order No.	Range (mm): L1 (L2 and L3)	Resolution (mm)	Base (W×T) (mm)	Maximum permissible error E_{MPE} (mm)*
571-254-20	10.1 - 160 (0 - 150)	0.01	100×6	±0.03
571-255-20	10.1 - 210 (0 - 200)			

Inch / Metric

Order No.	Range: L1 (L2 and L3)	Resolution	Base (W×T) (mm)	Maximum permissible error E_{MPE}*
571-264-20	0.4 in - 6.4 in (0 - 6 in)	0.0005 in/0.01 mm	100×6	±0.0015 in/±0.03 mm
571-265-20	0.4 in - 8.4 in (0 - 8 in)			

- Battery: SR44 (1 pc.), **938882**. For initial operational checks (standard accessory).
- Battery life: Approx. 5 years

* Maximum permissible error, E_{MPE}, is the term (notation) used in JIS B 7518: 2018, revised based on ISO/TR 14253-6: 2012.

DIMENSIONS

Unit: mm

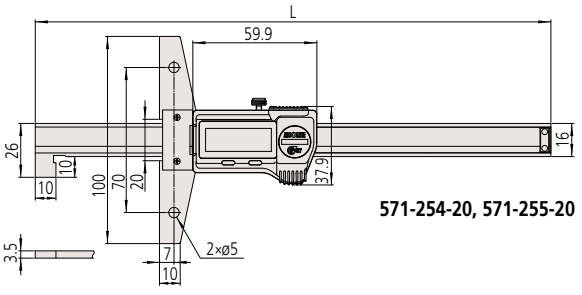

571-254-20, 571-255-20

Range (mm)	L
0 - 150	249
0 - 200	299

MeasurLink® ENABLED
Data Management Software by Mitutoyo

U-WAVE fit

ABSOLUTE™

IP67

Dust- and Water-Protected
TÜVRheinland CERTIFIED
www.tuv.com ID 0000045042

Typical applications

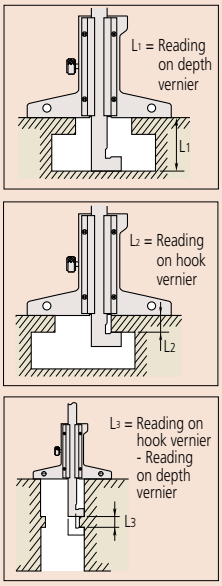

Optional Accessories

Order No.	Type	Description
05CZA624	A	Connecting cables (1 m)
05CZA625	A	Connecting cables (2 m)
06AFM380A	A	USB Input Tool Direct (2 m)
02AZD790A	A	Connecting cables for **U-WAVE-T** (160 mm)
02AZE140A	A	Connecting cables for **U-WAVE-T** For foot switch
264-620	IP67	**U-WAVE-TC**
264-621	Buzzer	**U-WAVE-TC**
264-624	IP67	**U-WAVE-TCB** Transmitter
264-625	Buzzer	**U-WAVE-TCB** Transmitter
02AZF310	IP67	Connecting unit for **U-WAVE-TC/TCB**

Mitutoyo reserves the right to change any or all aspects of any product specification, including prices, designs and service content, without notice.

MeasurLink® ENABLED Data Management Software by Mitutoyo

U-WAVE fit

ABSOLUTE™

IP67

Dust- and Water-Protected

TÜVRheinland CERTIFIED www.tuv.com ID 0000045042

Optional Accessories

Order No.	Type	Description
02AZE140A	A	Connecting cables for **U-WAVE-T** For foot switch
264-620	IP67	**U-WAVE-TC**
264-621	Buzzer	**U-WAVE-TC**
264-624	IP67	**U-WAVE-TCB** Transmitter
264-625	Buzzer	**U-WAVE-TCB** Transmitter
02AZF310	IP67	Connecting unit for **U-WAVE-TC/TCB**

Depth Gage
SERIES 571 — Pin End Type

- Coolant proof models achieve IP67 protection level.
- Optional longer extension bases are available. (Refer to page D-76.)
- Allows integration into statistical process control and measurement systems for models with measurement data output connector. (Refer to page A-3.)



571-302-20

SPECIFICATIONS

Metric

Order No.	Range (mm): L1 (L2 and L3)	Resolution (mm)	Base (W×T) (mm)	Maximum permissible error E_{MPE} (mm)*
571-301-20	0 - 150	0.01	100×6	±0.02
571-302-20	0 - 200			

Inch / Metric

Order No.	Range: L1 (L2 and L3)	Resolution	Base (W×T) (mm)	Maximum permissible error E_{MPE}*
571-311-20	0 - 150 mm/0 - 6 in	0.0005 in/0.01 mm	100×6	±0.001 in/±0.02 mm
571-312-20	0 - 200 mm/0 - 8 in			

- Battery: SR44 (1 pc.), **938882**. For initial operational checks (standard accessory).
- Battery life: Approx. 5 years

* Maximum permissible error, E_{MPE}, is the term (notation) used in JIS B 7518: 2018, revised based on ISO/TR 14253-6: 2012.

DIMENSIONS

Unit: mm

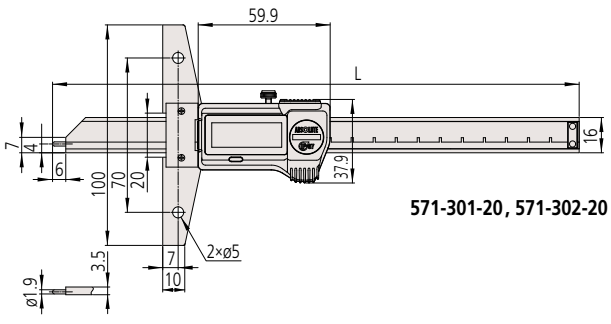

571-301-20, 571-302-20

Range (mm)	L
0 - 150	239
0 - 200	289

D

Mitutoyo reserves the right to change any or all aspects of any product specification, including prices, designs and service content, without notice.

Mitutoyo

Mini Depth Gage
SERIES 571

- Enables measurement of depth of tire tread.
- ABSOLUTE Digital Depth Gage.
- Allows integration into statistical process control and measurement systems for models with measurement data output connector. (Refer to page A-3.)
- Digital display with 0.01 mm resolution enables measurement without misreading.



571-100-20

SPECIFICATIONS

Metric

Order No.	Range (mm)	Resolution (mm)	Base (mm)	Maximum permissible error E_{MPE} (mm)*
571-100-20	0 - 25	0.01	60 (thickness 6.65)	±0.02

Inch / Metric

Order No.	Range (in)	Resolution (in)	Base (in)	Maximum permissible error E_{MPE} (in)*
571-200-20	0 - 1	0.0005	2.36	±0.001

- Battery: SR44 (1 pc.), **938882**. For initial operational checks (standard accessory)
- Battery life: Approx. 5 years under normal use.

* Maximum permissible error, E_{MPE}, is the term (notation) used in JIS B 7518: 2018, revised based on ISO/TR 14253-6: 2012.

DIMENSIONS

Unit: mm

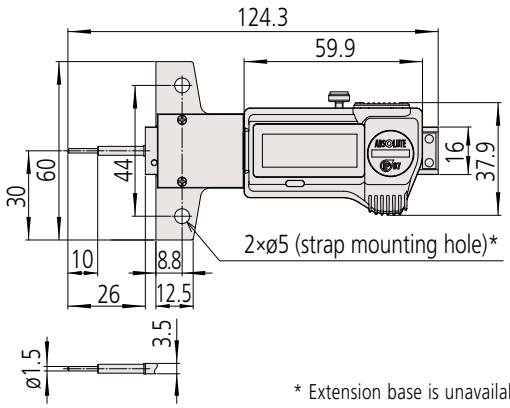

* Extension base is unavailable.

MeasurLink® ENABLED
Data Management Software by Mitutoyo

U-WAVE fit

ABSOLUTE™

IP67

Dust- and Water-Protected
TÜVRheinland CERTIFIED
www.tuv.com ID 0000045042

Measurement example



Optional Accessories

Order No.	Type	Description
05CZA624	A	Connecting cables for **IT/DP/MUX** (1 m)
05CZA625	A	Connecting cables for **IT/DP/MUX** (2 m)
06AFM380A	A	USB Input Tool Direct (2 m)
02AZD790A	A	Connecting cables for **U-WAVE-T** (160 mm)
02AZE140A	A	Connecting cables for **U-WAVE-T** For foot switch
264-620	IP67	**U-WAVE-TC**
264-621	Buzzer	**U-WAVE-TC**
264-624	IP67	**U-WAVE-TCB** Transmitter
264-625	Buzzer	**U-WAVE-TCB** Transmitter
02AZF310	IP67	Connecting unit for **U-WAVE-TC/TCB**

D

Mitutoyo reserves the right to change any or all aspects of any product specification, including prices, designs and service content, without notice.

Extension Bases
Optional accessory for Depth Gage

Example of attaching the extension base

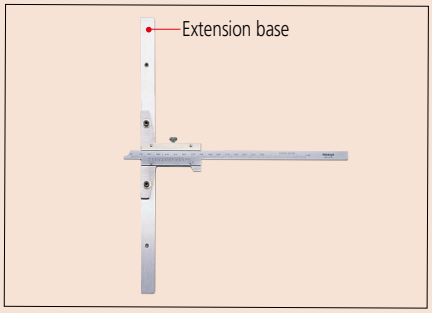

- Attaches to the base (reference face) plate of a depth gage to extend its span.
- These Extension Bases cannot be attached to Digimatic models of 18 inch/450 mm and over or vernier models of 24 inch/600 mm and over.
- For these larger models, special-size extension bases are available as shown on the left.



900372

SPECIFICATIONS

Metric

Order No.	Size L (mm)	Thickness (mm)	Material	n
900370	180	8	Martensitic stainless steel	2
900371	260			5
900372	320			4

Inch

Order No.	Size L (in)	Thickness (in)	Material	n
900367	7	0.3	Martensitic stainless steel	2
900368	10			5
900369	12			4

DIMENSIONS

Unit: mm

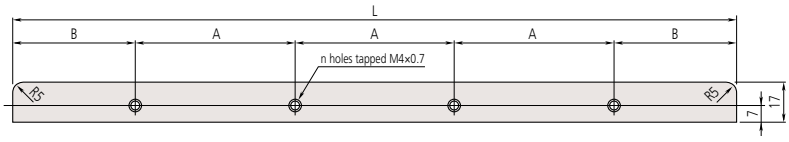

Order No.	A	B	L	n
900370	70	55	180	2
900371	35	60	260	5
900372	70	55	320	4

Depth Gage Attachment
Optional Accessory for Calipers

Example of attaching the depth gage attachment

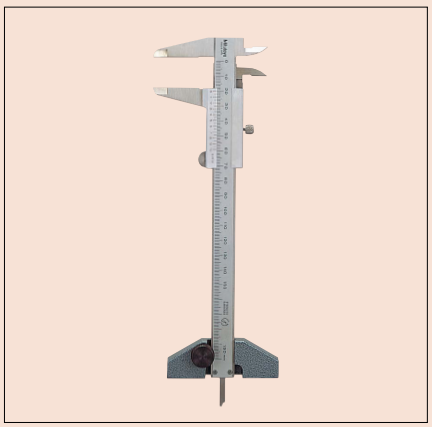

- Attaching this depth gage attachment to the depth measurement face of the caliper makes depth measurement accurate and secure.



050084-10

SPECIFICATIONS

Metric

Order No.	Size (mm)	Applicable measuring range of caliper
050083-10	75	100 mm, 150 mm, 200 mm, 4 in, 6 in and 8 in
050084-10	100	100 mm, 150 mm, 200 mm, 4 in, 6 in and 8 in
050085-10	125	300 mm (12 in)

DIMENSIONS

Unit: mm

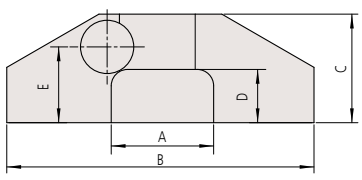

Size (mm)	A	B	C	D	E	T
75	25	75	26.5	13	18.5	12
100		100				
125	30	125	28.5		20	14

T: Base thickness

Mitutoyo reserves the right to change any or all aspects of any product specification, including prices, designs and service content, without notice.

Mitutoyo

Dial Depth Gage
SERIES 7

- Optimal for hole, narrow groove and step measurement.


7211A


7214A


7222A


7224A


7231A



SPECIFICATIONS

Metric

Order No.	Range (mm)	Graduation (mm)	Stroke (mm)	Accuracy (µm)	Measuring force (N)	Base			
						W (mm)	T (mm)	Flatness (µm)	Mounting position of a dial indicator
7210A	0 - 10	0.01	10	±15	1.4	40	16	5	1
7211A	0 - 200					63.5			
7212A						101.6			
7213A	0 - 210		30	±30	2.5	63.5			
7214A						101.6			
7220A	0 - 200		10	±15	1.4	100	18		2
7221A						150			3
7222A	0 - 10					ø16			1
7223A						ø25			
7224A						ø40			
7231A	0 - 200		5			63.5	16		

Order No.	Contact point*1	Extension rod*2	Indicator*3 (dial indicator)
7210A	Provided with a needle point (**137413**)	—	**2902AB** for Depth Gage
7211A	Provided with a carbide-tipped ball point (**21JAA224**)	5 pcs. (10, 20, 30, 30, 100 mm)	**2902AB** for Depth Gage
7212A			
7213A	Provided with a carbide-tipped ball point (**21JAA225**)	3 pcs. (30, 60, 90 mm)	**2952AB** for Depth Gage
7214A			
7220A	Provided with a carbide-tipped ball point (**21JAA224**)	5 pcs. (10, 20, 30, 30, 100 mm)	**2902AB** for Depth Gage
7221A			
7222A	Provided with a needle point (**137413**)	—	**2902AB** for Depth Gage
7223A	Provided with a carbide-tipped ball point (**21JAA224**: 17 mm)		
7224A			
7231A		5 pcs. (10, 20, 30, 30, 100 mm) Interchangeable contact point (**21JAA226**)	**1162A** for Depth Gage (Back plunger type)

*1 Caution should be exercised when exchanging a contact point of a Depth Gage (Dial/Digimatic Indicator):
- If a different size contact point is mounted, displacement of the contact point from the base contact surface will be changed and as a result, measurement range may not be maintained.
- A contact point cannot be mounted to a Depth Gage if its diameter is too large for the hole diameter of the base.
- Parallelism adjustment with the bottom face of the base is required when mounting a flat contact point such as the flat/needle or carbide-tipped contact point.

*2 Caution should be exercised when using an extension rod:
- If the total length of the extension rod exceeds 110 mm (4.5 in) use the instrument in a vertical position (contact point downward).
- Use a master gage (such as gauge blocks) to perform zero-setting when the extension rod is mounted. (Master gage is an optional accessory.)

*3 Caution should be exercised when indicators are used on a Depth Gage:
- When the indicator is exchanged and a longer extension rod is connected, the contact-point may deflect significantly with an adverse effect on measuring accuracy.
- **Order No.543-710B/543-712B** for Depth Gage has a measuring force less than 1.5 N. (Refer to page D-79.)

Typical application

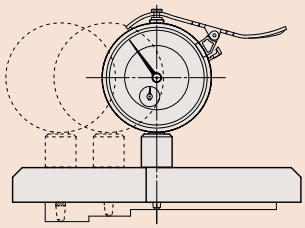

7220A and **7221A** allow the mounting position of a dial indicator to be varied.

When using an extension rod

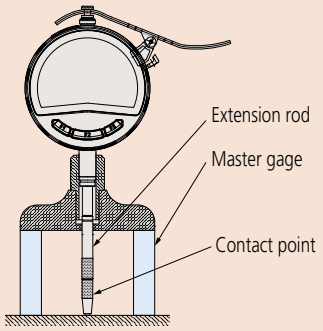

Mitutoyo reserves the right to change any or all aspects of any product specification, including prices, designs and service content, without notice.

SPECIFICATIONS

Inch

Order No.	Range (in)	Graduation (in)	Stroke (in)	Accuracy (in)	Measuring force (N)	Base			
						W (in)	T (in)	Flatness (in)	Mounting position of a dial indicator
7217A	0 - 8	0.001	1	±0.002	2.0	2.5	0.63	0.0002	1
7218A						4			
7237A			0.2		1.4	2.5			
7238A						4			

Order No.	Contact point*	Extension rod*	Indicator* (dial indicator)
7217A	Provided with a carbide-tipped ball point (**21JZA242**: 0.7 in)	3 pcs. (1 in, 2 in, 4 in)	**2904AB** for Depth Gage
7218A			
7237A		4 pcs. (0.5 in, 1 in, 2 in, 4 in) Interchangeable contact point (**21JZA243**: 0.9 in)	**1168A** for Depth Gage (Back plunger type)
7238A			

* Refer to corresponding notes on page D-77.

DIMENSIONS

Unit: mm

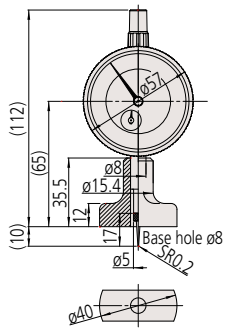

7210A

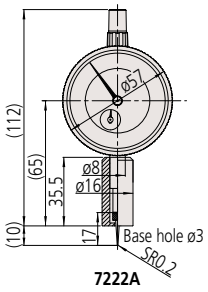

7222A

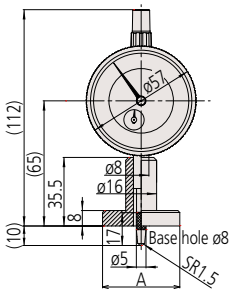

7223A A=ø25 mm
7224A A=ø40 mm

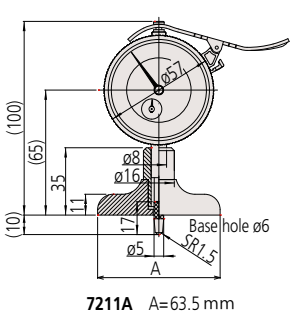

7213A, 7217A A=63.5 mm
7214A, 7218A A=101.6 mm

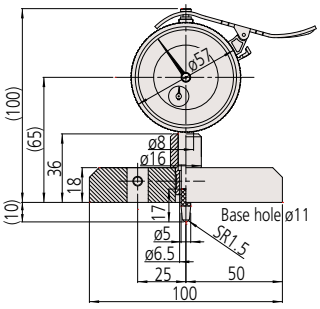

7220A

7211A A=63.5 mm
7212A A=101.6 mm

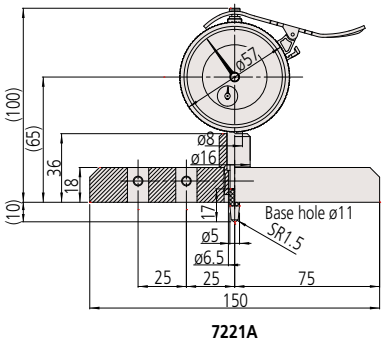

7221A

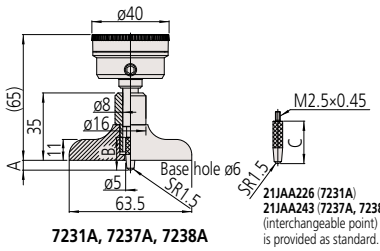

7231A, 7237A, 7238A

21JAA226 (**7231A**)
21JAA243 (**7237A, 7238A**)
(interchangeable point)
is provided as standard.

Order No.	A	B	C
7231A	(5)	17	22
7237A, 7238A	0.21 in	0.7 in	0.9 in

Mitutoyo reserves the right to change any or all aspects of any product specification, including prices, designs and service content, without notice.

MeasurLink® ENABLED
Data Management Software by Mitutoyo

ABSOLUTE™

ABSOLUTE Digimatic Depth Gage SERIES 547

- Easy-to-read dial effectively prevents misreading. (Refer to page F-5 for functions.)
- Allows integration into statistical process control and measurement systems for models with measurement data output connector. (Refer to page A-3.)



547-211A

SPECIFICATIONS

Metric

Order No.	Range (mm)	Resolution (mm)	Stroke (mm)	Accuracy (µm)	Measuring force (N)	Base		
						W (mm)	T (mm)	flatness (µm)
547-211A	0 - 200	0.01	12.7	±20	1.5 or less	63.5	16	5
547-212A						101.6		
547-251A		0.0005 (0.001/0.01 mm selectable)		±5		63.5		2
547-252A						101.6		

Order No.	Contact point*	Extension rod*	Indicator*
547-211A	Provided with a carbide-tipped ball point (**21JAA224**)	5 pcs. (10, 20, 30, 30, 100 mm)	**543-710B**
547-212A			
547-251A			**543-700B**
547-252A			

Inch / Metric

Order No.	Range (in)	Resolution	Stroke (in)	Accuracy (in)	Measuring force (N)	Base		
						W (in)	T (in)	flatness (in)
547-217SA	0 - 8	0.0005 in/0.01 mm	0.5	±0.001	1.5 or less	2.5	0.63	0.0002
547-218SA						4		
547-257SA		0.00002 in (0.00005/0.0001/0.0005 in 0.0005/0.001/0.01 mm selectable)		±0.0002		2.5		0.00008
547-258SA						4		

Order No.	Contact point*	Extension rod*	Indicator*
547-217SA	Provided with a carbide-tipped ball point (**21JZA242**)	4 pcs. (0.5 in, 1 in, 2 in, 4 in)	**543-712B**
547-218SA			
547-257SA			**543-702B**
547-258SA			

* Refer to corresponding notes on page D-77.

DIMENSIONS

Unit: mm

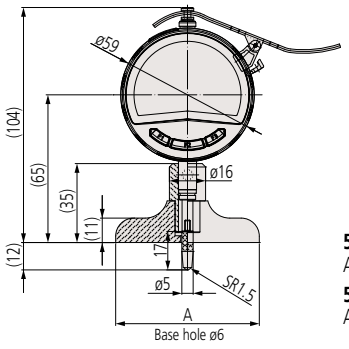

547-211A、547-251A
A=63.5 mm

547-212A、547-252A
A=101.6 mm

Mitutoyo reserves the right to change any or all aspects of any product specification, including prices, designs and service content, without notice.

Depth Gage Performance Evaluation Method

JIS B 7518 was revised and issued in 2018 as the Japanese Industrial Standards of the depth gage, and the "Instrumental error" indicating the indication error of the depth gage has been changed to "Maximum permissible error (MPE) of indication".
The "Instrumental error" of the conventional JIS adopts acceptance criteria that the specification range (precision specification) equals acceptance range, and the OK/NG judgment does not include measurement uncertainty (**Fig. 1**).
The "Maximum permissible error (MPE) of indication" of the new JIS employs the basic concept of the OK/NG judgment taking into account the uncertainty adopted in the ISO standard (ISO 14253-1).
The verification of conformity and nonconformity to the specifications is clearly stipulated to use the internationally recognized acceptance criteria (simple acceptance) when the specification range equals the acceptance range, and it is accepted that the specification range equals the acceptance range if a given condition considering uncertainty is met.
The above said internationally recognized acceptance criterion is ISO/TR 14253-6: 2012 (**Fig. 2**).
The following describes the standard inspection method including the revised content of JIS 2018.

Fig. 1 **Conventional JIS** Instrumental error
JIS B 7518-1993

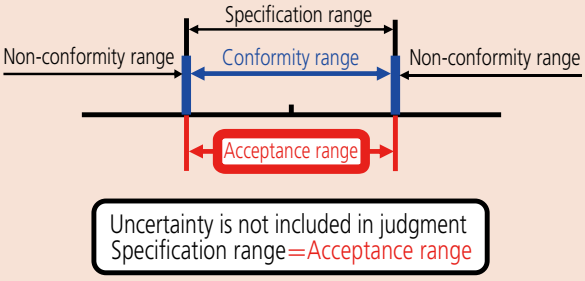

Fig. 2 **New JIS** Maximum permissible error (MPE)
JIS B 7518: 2018 (ISO/TR 14253-6: 2012)

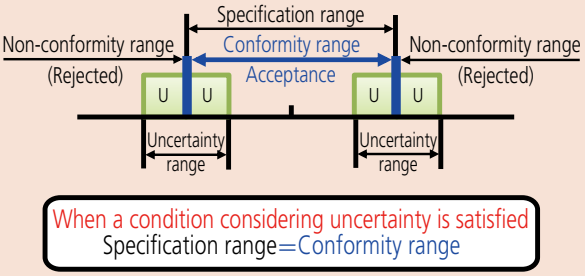

Maximum permissible error of partial measuring face contact E_{MPE} [JIS B 7518: 2018]

The Maximum permissible error E_{MPE} of a depth gage is an indication error applied to depth measurement.
Table 1 shows the Maximum permissible error E_{MPE} of the indication value of the partial measuring surface contact error.
E_{MPE} for any desired height is obtained by measuring the height of two equal length gauge blocks, or equivalent, with a height gage on a precision surface plate (**Fig. 3**) and then subtracting the gauge block size from the measured size.

Table 1: Maximum permissible error E_{MPE} of partial measuring face contact of a conventional depth gage

Unit: mm

Measurement depth	Scale interval, graduation or resolution	
	0.05	0.02 or 0.01
50 or less	±0.05	±0.02
Over 50, 100 or less	±0.06	±0.03
Over 100, 200 or less	±0.07	
Over 200, 300 or less	±0.08	±0.04
Over 300, 400 or less	±0.09	
Over 400, 500 or less	±0.10	±0.05
Over 500, 600 or less	±0.11	

Note: E_{MPE} includes the measurement error arising from straightness, flatness of the measuring surface and parallelism with the reference surface.

Fig. 3: Determination of partial measuring face contact error

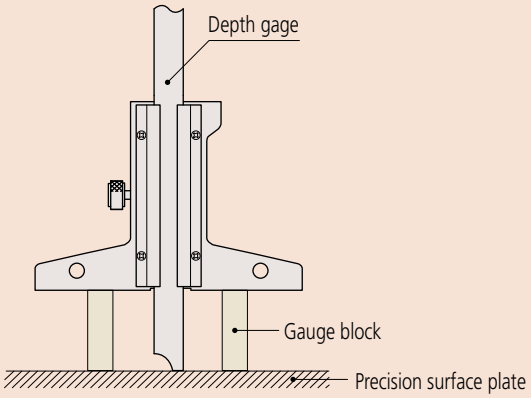

The "Instrumental error" indicating the indication error of JIS has been changed to "Maximum permissible error (MPE) of indication" for the following models:

- **SERIES 571 ABSOLUTE Digimatic Depth Gage** described on page D-69 to D-70 (All models)
- **SERIES 527 Vernier Depth Gage** described on page D-71 (All models)
- **SERIES 527, 571 Hook End Type** described on page D-72 to D-74 (All models)
- **SERIES 571 Mini Depth Gage** described on page D-75 (All models)



Ultra Low Expansion Ceramic Gauge Blocks (ZERO CERA Blocks)

Refer to page E-6 for details.



Gauge Block Comparator GBCD-100A

Refer to page E-31 for details.



Digital Height Master

Refer to page E-35 for details.

E

Small Tool Instruments and Reference Gages

MeasurLink® ENABLED
Data Management Software by Mitutoyo

Measurement Data Network System

MeasurLink® is a measurement data management system based on databases (SQL Server). You can build a network to manage the measurement results and measuring machines by simply combining the functions necessary for your purpose.

MeasurLink® is a registered trademark of Mitutoyo Corporation in Japan and Mitutoyo America Corporation in the United States.



Measuring Instruments Shipped with Inspection Certificate

Mitutoyo guarantees product quality as a leading precision measuring instrument manufacturer and ships measuring instruments with an inspection certificate that includes inspection data so that customers can use them with confidence.

INDEX

Gauge Blocks

Features and Accuracies	E-3
Gauge Blocks with a Calibrated Coefficient of Thermal Expansion	E-6
ZERO CERA Blocks	E-6
Metric/Inch Rectangular Gauge Block Sets	E-7
Micrometer Inspection Gauge Block Sets	E-11
Individual Metric Rectangular Gauge Blocks	E-13
Individual Inch Rectangular Gauge Blocks	E-15
Rectangular Gauge Block Accessories	E-17
Accessories for Rectangular Gauge Blocks over 100 mm	E-19
Metric/Inch Square Gauge Block Sets	E-21
Individual Metric Square Gauge Blocks	E-23
Individual Inch Square Gauge Blocks	E-24
Square Gauge Block Accessories Set	E-25
Step Master	E-27
Custom-made Blocks & Gages	E-28
Maintenance Kit for Gauge Blocks	E-29
Ceraston	E-30

Gauge Block Calibration

GBCD-100A	E-31
GBCD-250	E-32
Quick Guide to Precision Measuring Instruments	E-33

Height Master, Standard Scales, Reference Gages and Granite Surface Plates

Height Master	E-35
Universal Height Master	E-37
Check Master	E-38
Standard Scales	E-39
Working Standard Scales	E-40
High Precision Square	E-41
Square Master	E-42
Steel Rules	E-43
Thickness Gages	E-44
Radius Gages	E-45
Thread Pitch Gages	E-45
Digimatic Universal Protractor	E-46
Universal Bevel Protractor	E-46
Bevel Protractor	E-46
Black Granite Surface Plates	E-47

Mitutoyo

Features and Accuracies

Features of Mitutoyo Gauge Blocks

Mitutoyo offers 3 types of gauge block for use as length standards: rectangular steel, rectangular ceramic (CERA Blocks) and square steel gauge blocks. In addition, rectangular and square protection blocks (1 mm and 2 mm for each) are available in tungsten carbide. Mitutoyo gauge blocks are recognized to be of the highest quality both here in Japan and abroad, and are available in various grades to meet every need in respect of working conditions, environment and application.

Accuracy

As a world-leading precision measuring equipment manufacturer, Mitutoyo is certified by the Japanese government as an accredited calibration laboratory, which means that the accuracy of its gauge blocks is guaranteed through traceability to the Metrology Management Center of the National Institute of Advanced Industrial Science and Technology (AIST).

Wringing

Lapping measuring surfaces is one of Mitutoyo's specialties. Our advanced technique, developed over more than half a century, enables us to achieve the optimum flatness and surface finish needed for gauge blocks and thus maximize the wringing force.

Abrasion Resistance and Dimensional Stability of Steel Blocks

High-carbon high-chrome steel is employed to satisfy a variety of the material characteristics required for gauge blocks. Our advanced heat treatment technology for steel blocks, which involves repeated temperature cycling, simultaneously achieves excellent abrasion resistance and minimizes any change in length over time.

CERA Blocks

CERA blocks are made of a ceramic material with a superior surface finish, created by Mitutoyo's ultra-precision machining techniques, that provides a premium quality block with significant advantages:

(1) Corrosion Resistant
Anti-corrosion treatment is not required when handled normally (i.e. with fingers), resulting in simple maintenance and storage.

(2) No Burrs Caused by Accidental Mishandling
Since the CERA Block is very hard, it will not scratch easily and is highly resistant to burrs. If a burr is formed, it can easily be removed with a ceramic deburring stone (Ceraston).

(3) Abrasion Resistant
CERA Blocks have 10 times the abrasion resistance of steel gauge blocks.

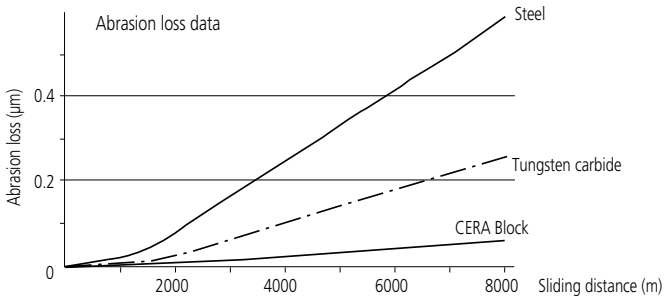

(4) Dimensionally Stable
CERA Blocks are free from dimensional change over time.

(5) Clearly Marked Sizes
Black characters, indicating the nominal length, are inscribed by laser and are clearly visible against the white surface of the block.

(6) Non-magnetic Nature Prevents Steel Swarf Contamination

(7) High Wringing Force
Superior flatness and surface finish provides maximum wringing force.

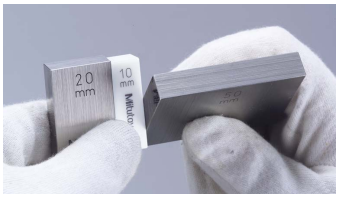

Classification of Gauge Blocks by Shape

Mitutoyo broadly divides gauge blocks into two categories according to the block shape.

Rectangular gauge blocks

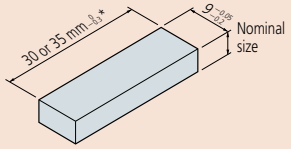

* Depends on the nominal size.
More than 10 mm: 35 mm
10 mm or less: 30 mm

Square gauge blocks

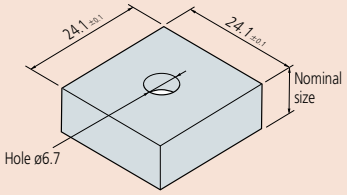

All standard long blocks 125 mm or more have two coupling holes on the body.

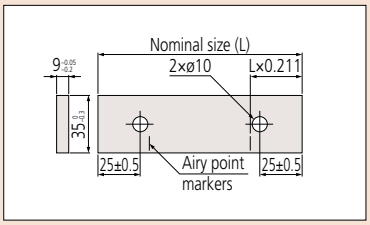

Long rectangular gauge blocks

Selecting Gauge Blocks

- Select gauge blocks in accordance with the combination range required.
  If a large length is required, use one or more blocks from a long-block set.
- Select gauge blocks in accordance with the minimum length step required. Add a wear block at each end of the stack if the workpiece material is abrasive, or the stack will be used frequently.
- If a set containing a large number of gauge blocks is selected, the number of gauge blocks required for any particular length is reduced and the number of combinations is increased. Accuracy of the blocks in the set will be retained longer because normal wear will be spread over a larger number of blocks.
- Gauge block sets dedicated to micrometer and caliper inspection are available (refer to page E-11 for details).
- If using only one length repeatedly, it is a good idea to purchase discrete gauge blocks (refer to pages E-13, E-14, E-15, E-16, E-23, and E-24 for details) .
- Products can be provided in combinations other than those in our standard sets. When placing such orders, please specify whether a storage box is required. Feel free to consult us if you need gauge blocks compliant with British (BS), American, or other standards.
  The U.S. Federal Specification for gauge blocks was replaced by ASME B89.1.9 in 2002. Please contact your local Mitutoyo sales office for further information.
- 2 mm-based gauge blocks, which take the base of the minimum length step as 2 mm, are available and many people find them easier to handle than 1 mm-based gauge blocks.
- All Mitutoyo gauge blocks, whether sold in sets or individually, come with a measurement inspection certificate.

Mitutoyo reserves the right to change any or all aspects of any product specification, including prices, designs and service content, without notice.

Mitutoyo Gauge Blocks and Inspection Certificates

A Certificate of Inspection is furnished with all Mitutoyo gauge blocks with a serial number on the box (in the case of sets) and an identification number on each block. The deviation of each block from nominal length, at the time of inspection, is stated. For this inspection, each gauge block is measured relative to the upper level master using a gauge block comparator. Grade K gauge blocks are measured by a primary measurement method using an interferometer.

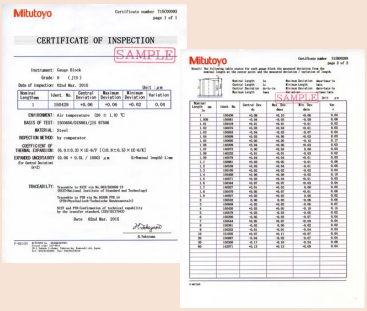

Grade and Application

The following table can be used to select the gauge block grade according to usage (specified by DIN861, BS4311, and JIS B 7506).

	Applications	Grade
Workshop use	• Mounting tools and cutters	2
	• Manufacturing gages • Calibrating instruments	1 or 2
Inspection use	• Inspecting mechanical parts, tools, etc.	1 or 2
	• Checking the accuracy of gages • Calibrating instruments	0 or 1
Calibration use	• Checking the accuracy of gauge blocks for workshop • Checking the accuracy of gauge blocks for inspection • Checking the accuracy of instruments	K or 0
Reference use	• Checking the accuracy of gauge blocks for calibration • For academic research	K

Constructing a Gauge Block Stack

The following points should be noted when constructing a gauge block stack:

(1) Use as few gauge blocks as possible to obtain the required length by selecting thick blocks wherever possible.
(2) Select the block for the least significant digit first, then work back through the more significant digits until the required length is attained.
(3) There are multiple combinations for the integer part of a length. To prevent wear as much as possible, do not always use the same gauge blocks.

Example: Required length=45.6785 mm

• For a 1 mm-based gauge block set

1.0005
1.008
1.17
17.5
+) 25
45.6785 mm

• For a 2 mm-based gauge block set

2.0005
2.008
2.17
14.5
+) 25
45.6785 mm

Note: Regarding the method for wringing, refer to "Quick Guide to Precision Measuring Instruments" on page E-33.



(8) Superior Material Characteristics of CERA Block

Property \ Material	CERA Block (ZrO_2)	Steel (Fe)	Tungsten Carbide (WC-Co)	ZERO CERA Blocks (Low thermal expansion)
Hardness (HV)	1350	800	1650	826
Coefficient of thermal expansion (10^{-6}/K)	9.3±0.5	10.8±0.5	5.5±1.0	0±0.02
Flexural strength by 3-point bending (MPa)	1270	1960	1960	210
Fracture toughness K_{1C} (MPa·$m^{1/2}$)	7	120	12	1.2
Young's modulus ×10^4 (MPa)	20.6	20.6	61.8	130
Poisson's ratio	0.3	0.3	0.2	0.3
Specific gravity	6.0	7.8	14.8	2.5
Thermal conductivity (W/m·k)	2.9	54.4	79.5	3.7

Note: Ceramics have the advantage of a slow response to temperature changes due to the low thermal conductivity. However, caution is required when using CERA blocks under conditions of rapid temperature change.

(9) Difference in expansion coefficient between steel and CERA blocks is just 1.5×10^{-6}/K

The thermal expansion coefficient of a CERA Block is quite similar to that of a steel gauge block.

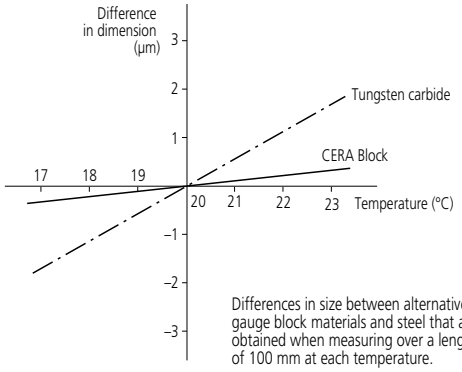

Differences in size between alternative gauge block materials and steel that are obtained when measuring over a length of 100 mm at each temperature.

(10) Highly Resistant to Dropping and Impact Damage

The CERA Block material is one of the toughest ceramics. It is extremely difficult to crack a CERA Block in normal use.

Features of Square Gauge Blocks



(1) Gauge blocks in a stack can be clamped together

After wringing square gauge blocks, a tie rod can be inserted through the center hole to clamp the blocks together for extra security.



(2) A height reference standard can easily be made

A precision height reference standard can be made easily and inexpensively using accessories such as the plain jaw and block base.

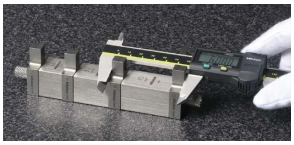

(3) A dedicated inspection jig can easily be made

A dedicated inspection jig for periodic inspection of instruments can be made easily and inexpensively.



(4) A wide measuring surface with cross-sectional dimensions of 24.1×24.1 mm is available.

A square gauge block retains stable orientation both longitudinally and laterally. A wide range of applications is covered, including cutting tool positioning, angle measurement with a sine bar, taper measurement with a roller, and inspection of depth micrometers.

Long and Ultra-Thin Gauge Blocks

Mitutoyo offers extra-thin gauge blocks from 0.10 mm to 0.99 mm (increments of 0.01 mm) as well as long gauge blocks up to 1,000 mm as standard products.

E

Mitutoyo reserves the right to change any or all aspects of any product specification, including prices, designs and service content, without notice.

ACCURACY SPECIFICATIONS: JIS B 7506-2004 (JAPAN)

Nominal length (mm)		Grade K		Grade 0	
		Limit deviation of length at any point (µm)	Tolerance for the variation in length (µm)	Limit deviation of length at any point (µm)	Tolerance for the variation in length (µm)
from 0.5	up to 10	±0.20	0.05	±0.12	0.10
over 10	up to 25	±0.30	0.05	±0.14	0.10
over 25	up to 50	±0.40	0.06	±0.20	0.10
over 50	up to 75	±0.50	0.06	±0.25	0.12
over 75	up to 100	±0.60	0.07	±0.30	0.12
over 100	up to 150	±0.80	0.08	±0.40	0.14
over 150	up to 200	±1.00	0.09	±0.50	0.16
over 200	up to 250	±1.20	0.10	±0.60	0.16
over 250	up to 300	±1.40	0.10	±0.70	0.18
over 300	up to 400	±1.80	0.12	±0.90	0.20
over 400	up to 500	±2.20	0.14	±1.10	0.25
over 500	up to 600	±2.60	0.16	±1.30	0.25
over 600	up to 700	±3.00	0.18	±1.50	0.30
over 700	up to 800	±3.40	0.20	±1.70	0.30
over 800	up to 900	±3.80	0.20	±1.90	0.35
over 900	up to 1000	±4.20	0.25	±2.00	0.40

ISO 3650:1998

(at 20 °C)

Nominal length (mm)		Grade 1		Grade 2	
		Limit deviation of length at any point (µm)	Tolerance for the variation in length (µm)	Limit deviation of length at any point (µm)	Tolerance for the variation in length (µm)
from 0.5	up to 10	±0.20	0.16	±0.45	0.30
over 10	up to 25	±0.30	0.16	±0.60	0.30
over 25	up to 50	±0.40	0.18	±0.80	0.30
over 50	up to 75	±0.50	0.18	±1.00	0.35
over 75	up to 100	±0.60	0.20	±1.20	0.35
over 100	up to 150	±0.80	0.20	±1.60	0.40
over 150	up to 200	±1.00	0.25	±2.00	0.40
over 200	up to 250	±1.20	0.25	±2.40	0.45
over 250	up to 300	±1.40	0.25	±2.80	0.50
over 300	up to 400	±1.80	0.30	±3.60	0.50
over 400	up to 500	±2.20	0.35	±4.40	0.60
over 500	up to 600	±2.60	0.40	±5.00	0.70
over 600	up to 700	±3.00	0.45	±6.00	0.70
over 700	up to 800	±3.40	0.50	±6.50	0.80
over 800	up to 900	±3.80	0.50	±7.50	0.90
over 900	up to 1000	±4.20	0.60	±8.00	1.00

ACCURACY SPECIFICATIONS: BS 4311:2007 (UK)

Nominal length (in)		Grade K		Grade 0	
		Limit deviation of length at any point (µin)	Tolerance for the variation in length (µin)	Limit deviation of length at any point (µin)	Tolerance for the variation in length (µin)
over 0	up to 0.4	±8	2	±5	4
over 0.4	up to 1	±12	2	±6	4
over 1	up to 2	±16	3	±8	4
over 2	up to 3	±20	3	±10	5
over 3	up to 4	±24	3	±12	5

(at 20 °C)

Nominal length (in)		Grade 1		Grade 2	
		Limit deviation of length at any point (µin)	Tolerance for the variation in length (µin)	Limit deviation of length at any point (µin)	Tolerance for the variation in length (µin)
over 0	up to 0.4	±8	6	±18	12
over 0.4	up to 1	±12	6	±24	12
over 1	up to 2	±16	7	±32	12
over 2	up to 3	±20	7	±40	14
over 3	up to 4	±24	8	±48	14

ACCURACY SPECIFICATIONS: ASME B89.1.9-2002 (USA)

Nominal length (in)		Grade K		Grade 00		Grade 0		Grade 1		Grade 2	
		Limit deviations of length at any point (µin)	Tolerance for the variation in length (µin)	Limit deviations of length at any point (µin)	Tolerance for the variation in length (µin)	Limit deviations of length at any point (µin)	Tolerance for the variation in length (µin)	Limit deviations of length at any point (µin)	Tolerance for the variation in length (µin)	Limit deviations of length at any point (µin)	Tolerance for the variation in length (µin)
	up to 0.05	±12	2	±4	2	±6	4	±12	6	±24	12
over 0.05	up to 0.4	±10	2	±3	2	±5	4	±8	6	±18	12
over 0.45	up to 1	±12	2	±3	2	±6	4	±12	6	±24	12
over 1	up to 2	±16	2	±4	2	±8	4	±16	6	±32	12
over 2	up to 3	±20	2	±5	3	±10	4	±20	6	±40	14
over 3	up to 4	±24	3	±6	3	±12	5	±24	8	±48	14
over 4	up to 5	±32	3	±8	3	±16	5	±32	8	±64	16
over 5	up to 6	±32	3	±8	3	±16	5	±32	8	±64	16
over 6	up to 7	±40	4	±10	4	±20	6	±40	10	±80	16
over 7	up to 8	±40	4	±10	4	±20	6	±40	10	±80	16
over 8	up to 10	±48	4	±12	4	±24	6	±48	10	±104	18
over 10	up to 12	±56	4	±14	4	±28	7	±56	10	±112	20
over 12	up to 16	±72	5	±18	5	±36	8	±72	12	±144	20
over 16	up to 20	±88	6	±20	6	±44	10	±88	14	±176	24
over 20	up to 24	±104	6	±25	6	±52	10	±104	16	±200	28
over 24	up to 28	±120	7	±30	7	±60	12	±120	18	±240	28
over 28	up to 32	±136	8	±34	8	±68	12	±136	20	±260	32
over 32	up to 36	±152	8	±38	8	±76	14	±152	20	±300	36
over 36	up to 40	±160	10	±40	10	±80	16	±168	24	±320	40

(at 20 °C)

Nominal length (mm)		Grade K		Grade 00		Grade 0		Grade 1		Grade 2	
		Limit deviations of length at any point (µm)	Tolerance for the variation in length (µm)	Limit deviations of length at any point (µm)	Tolerance for the variation in length (µm)	Limit deviations of length at any point (µm)	Tolerance for the variation in length (µm)	Limit deviations of length at any point (µm)	Tolerance for the variation in length (µm)	Limit deviations of length at any point (µm)	Tolerance for the variation in length (µm)
	up to 0.5	±0.30	0.05	±0.10	0.05	±0.14	0.10	±0.30	0.16	±0.60	0.30
over 0.5	up to 10	±0.20	0.05	±0.07	0.05	±0.12	0.10	±0.20	0.16	±0.45	0.30
over 10	up to 25	±0.30	0.05	±0.07	0.05	±0.14	0.10	±0.30	0.16	±0.60	0.30
over 25	up to 50	±0.40	0.06	±0.10	0.06	±0.20	0.10	±0.40	0.18	±0.80	0.30
over 50	up to 75	±0.50	0.06	±0.12	0.06	±0.25	0.12	±0.50	0.18	±1.00	0.35
over 75	up to 100	±0.60	0.07	±0.15	0.07	±0.30	0.12	±0.60	0.20	±1.20	0.35
over 100	up to 150	±0.80	0.08	±0.20	0.08	±0.40	0.14	±0.80	0.20	±1.60	0.40
over 150	up to 200	±1.00	0.09	±0.25	0.09	±0.50	0.16	±1.00	0.25	±2.00	0.40
over 200	up to 250	±1.20	0.10	±0.30	0.10	±0.60	0.16	±1.20	0.25	±2.40	0.45
over 250	up to 300	±1.40	0.10	±0.35	0.10	±0.70	0.18	±1.40	0.25	±2.80	0.50
over 300	up to 400	±1.80	0.12	±0.45	0.12	±0.90	0.20	±1.80	0.30	±3.60	0.50
over 400	up to 500	±2.20	0.14	±0.50	0.14	±1.10	0.25	±2.20	0.35	±4.40	0.60
over 500	up to 600	±2.60	0.16	±0.65	0.16	±1.30	0.25	±2.60	0.40	±5.00	0.70
over 600	up to 700	±3.00	0.18	±0.75	0.18	±1.50	0.30	±3.00	0.45	±6.00	0.70
over 700	up to 800	±3.40	0.20	±0.85	0.20	±1.70	0.30	±3.40	0.50	±6.50	0.80
over 800	up to 900	±3.80	0.20	±0.95	0.20	±1.90	0.35	±3.80	0.50	±7.50	0.90
over 900	up to 1000	±4.20	0.25	±1.00	0.25	±2.00	0.40	±4.20	0.60	±8.00	1.00

Note 1: The accuracy of nominal lengths from 0.1 mm up to less than 0.5 mm follows that of nominal lengths from 0.5 mm up to 10 mm.
Note 2: Grade K gauge blocks are only available as made-to-order rectangular gauge blocks.
Note 3: Grade K gauge blocks are supplied with a JCSS calibration certificate. When ordering, kindly provide your formal name and contact information.

Limit deviation of length at any point
This is the permitted deviation of length.
The deviation of length, expressed as "actual length - nominal length", is measured at a total of five points: the "middle point" of the gauge block measuring face and the "four corners, at 1.5 mm on the inside from the side faces".

Tolerance for the variation in length
This is the permitted variation in length.
The variation in length is expressed as "deviation of length for the maximum (greatest length) - deviation of length for the minimum (smallest length)" among those measured at the five points mentioned above.

Mitutoyo reserves the right to change any or all aspects of any product specification, including prices, designs and service content, without notice.

*1: Suffix No. (-■■■) for Selecting Standard Required

ISO/DIN/JIS

Suffix No.	Grade	Inspection Certificate	Calibration Certificate JCSS
-01B	K	✔	✔

ASME

Suffix No.	Grade	Inspection Certificate	Calibration Certificate JCSS
-51B	K	✔	✔

BS

Suffix No.	Grade	Inspection Certificate	Calibration Certificate JCSS
-11B	K	✔	✔

Note: Only for 100 mm type

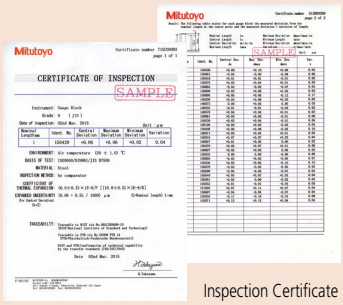

Inspection Certificate

Gauge Blocks with a Calibrated Coefficient of Thermal Expansion

- Mitutoyo offers top-quality gauge blocks (steel and ceramic), superior to K class blocks due to their advanced manufacturing technologies.
- Features an accurately calibrated thermal expansion coefficient measured with a proprietary double-faced interferometer (DFI). Each gauge block is calibrated for length on a highly accurate gauge block interferometer (GBI) system.
- Available as rectangular gauge blocks in the range 100 to 500 mm.





SPECIFICATIONS

Metric Blocks with CTE

Order No. (steel)*1	Order No. (CERA)*1	Length (mm)
611681	613681	100
611802	613802	125
611803	613803	150
611804	613804	175
611682	613682	200
611805	613805	250
611683	613683	300
611684	613684	400
611685	613685	500

Inch Blocks with CTE

Order No. (steel)*1	Order No. (CERA)*1	Length (in)
611204	613204	4
611205	613205	5
611206	613206	6
611207	613207	7
611208	613208	8
611222	613222	10
611223	613223	12
611224	613224	16
611225	613225	20

Grade	K class in JIS/DIN/ISO, ASME
Uncertainty of thermal expansion coefficient	0.035×10^{-6}/K (k=2)
Uncertainty of length measurement	30 nm (k=2), for 100 mm block

Note: An inspection certificate and a JCSS calibration certificate are supplied as standard.
A calibration report and a calibration certificate for the thermal expansion coefficient are also supplied as standard.

ZERO CERA Blocks

- Zero Cera Block is a next-generation gauge block made from a special lightweight ceramic having extremely low thermal expansion ($0\pm0.02\times10^{-6}$/K (20 °C)) and exhibiting almost no secular change, both in dimension and coefficient of thermal expansion.
- Available as rectangular gauge blocks in the range 30 to 1000 mm.



SPECIFICATIONS

Metric Blocks

Order No.			Length (mm)
JIS/ISO/DIN	BS	ASME	
617673-016	617673-116	617673-516	30
617675-016	617675-116	617675-516	50
617681-016	617681-116	617681-516	100
617682-016	617682-116	617682-516	200
617683-016	617683-116	617683-516	300
617684-016	617684-116	617684-516	400
617685-016	617685-116	617685-516	500
617840-016	617840-116	617840-516	600
617841-016	617841-116	617841-516	700
617843-016	617843-116	617843-516	800
617844-016	617844-116	617844-516	900
617845-016	617845-116	617845-516	1000
516-771-60	516-771-61	516-771-66	Above set

Mitutoyo reserves the right to change any or all aspects of any product specification, including prices, designs and service content, without notice.

Metric/Inch Rectangular Gauge Block Sets
SERIES 516

- Mitutoyo provides a wide selection of boxed sets of gauge blocks to meet the various needs of industry. Selecting the best set, or sets, to acquire usually depends on the accuracy required by the target applications, the level of convenience desired and the environmental conditions in which they will be used.

Steel 1 mm Base Block Sets

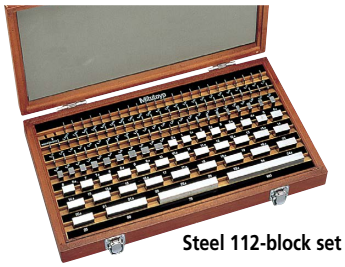
Steel 112-block set


Steel 103-block set


Steel 76-block set


Steel 56-block set


Steel 47-block set


Steel 46-block set


Steel 34-block set


Steel 32-block set

Steel 0.001 mm Step Block Sets


Steel 9-block set
(1.001 to 1.009 mm)


Steel 9-block set
(0.991 to 0.999 mm)


Steel 18-block set

Steel Long Block Sets


Steel 8-block set

Steel Wear Block Sets


Steel (1 mm)

Steel Thin Block Sets


Steel 9-block set

Note: Details of the contents of any particular set are given on pages E-9 to E-10.

Mitutoyo reserves the right to change any or all aspects of any product specification, including prices, designs and service content, without notice.

CERA 1 mm Base Block Sets


CERA 112-block set


CERA 103-block set


CERA 76-block set


CERA 56-block set


CERA 47-block set


CERA 46-block set


CERA 34-block set


CERA 32-block set

CERA 0.001 mm Step Block Sets


CERA 9-block set
(1.001 to 1.009 mm)


CERA 9-block set
(0.991 to 0.999 mm)


CERA 18-block set

CERA Long Block Sets


CERA 8-block set

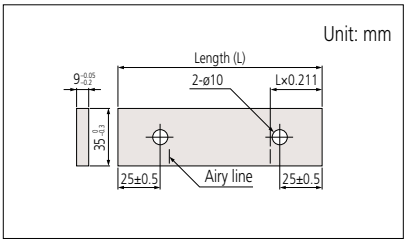

CERA Wear Block Sets


CERA (1 mm)

Note: Details of the contents of any particular set are given on pages E-9 to E-10.

Mitutoyo reserves the right to change any or all aspects of any product specification, including prices, designs and service content, without notice.

SPECIFICATIONS

1 mm Base Block Sets

Blocks per set	Order No.		Standard/grade available and **Suffix No.**[*1]			Blocks included in set		
	Steel	CERA	ISO/DIN/JIS	ASME	BS	Size (mm)	Step (mm)	Qty.
122	—	—	—	—	—	1.0005		1
	516-596	—	K: -■0	—	—	1.001 - 1.009	0.001	9
	516-597	—	0: -■0	—	—	1.01 - 1.49	0.01	49
	516-598	—	1: -■0	—	—	1.6 - 1.9	0.1	4
	516-599	—	2: -■0	—	—	0.5 - 24.5	0.5	49
						30 - 100	10	8
						25, 75		2
112	516-531	516-541	—	K: -■6	—	1.0005		1
	516-937	516-337	K: -■0	00: -■6	K: -■1	1.001 - 1.009	0.001	9
	516-938	516-338	0: -■0	0: -■6	0: -■1	1.01 - 1.49	0.01	49
	516-939	516-339	1: -■0	1: -■6	1: -■1	0.5 - 24.5	0.5	49
	516-940	516-340	2: -■0	2: -■6	2: -■1	25 - 100	25	4
103	516-533	516-542	—	K: -■6	—	1.005		1
	516-941	516-341	K: -■0	00: -■6	K: -■1	1.01 - 1.49	0.01	49
	516-942	516-342	0: -■0	0: -■6	0: -■1	0.5 - 24.5	0.5	49
	516-943	516-343	1: -■0	1: -■6	1: -■1	25 - 100	25	4
	516-944	516-344	2: -■0	2: -■6	2: -■1			
88	—	—	—	—	—	1.0005		1
	516-969	516-369	—	—	K: -■1	1.001 - 1.009	0.001	9
	516-970	516-370	0: -■0	—	0: -■1	1.01 - 1.49	0.01	49
	516-971	516-371	1: -■0	—	1: -■1	0.5 - 9.5	0.5	19
	516-972	516-372	2: -■0	—	2: -■1	10 - 100	10	10
87	516-535	515-543	—	K: -■6	—	1.001 - 1.009	0.001	9
	516-945	516-345	K: -■0	00: -■6	K: -■1	1.01 - 1.49	0.01	49
	516-946	516-346	0: -■0	0: -■6	0: -■1	0.5 - 9.5	0.5	19
	516-947	516-347	1: -■0	1: -■6	1: -■1	10 - 100	10	10
	516-948	516-348	2: -■0	2: -■6	2: -■1			
76	—	—	—	—	—	1.005		1
	516-949	516-349	K: -■0	—	—	1.01 - 1.49	0.01	49
	516-950	516-350	0: -■0	—	—	0.5 - 9.5	0.5	19
	516-951	516-351	1: -■0	—	—	10 - 40	10	4
	516-952	516-352	2: -■0	—	—	50 - 100	25	3
56	516-536	516-544	—	K: -■6	—	0.5		1
	516-953	516-353	K: -■0	00: -■6	—	1.001 - 1.009	0.001	9
	516-954	516-354	0: -■0	0: -■6	—	1.01 - 1.09	0.01	9
	516-955	516-355	1: -■0	1: -■6	—	1.1 - 1.9	0.1	9
	516-956	516-356	2: -■0	2: -■6	—	1 - 24	1	24
						25 - 100	25	4
47	516-537	516-545	—	K: -■6	—	1.005		1
	516-957	516-357	K: -■0	00: -■6	—	1.01 - 1.09	0.01	9
	516-958	516-358	0: -■0	0: -■6	—	1.1 - 1.9	0.1	9
	516-959	516-359	1: -■0	1: -■6	—	1 - 24	1	24
	516-960	516-360	2: -■0	2: -■6	—	25 - 100	25	4
47	—	—	—	—	—	1.005		1
	516-961	516-361	K: -■0	—	K: -■1	1.01 - 1.19	0.01	19
	516-962	516-362	0: -■0	—	0: -■1	1.2 - 1.9	0.1	8
	516-963	516-363	1: -■0	—	1: -■1	1 - 9	1	9
	516-964	516-364	2: -■0	—	2: -■1	10 - 100	10	10
46	—	—	—	—	—	1.001 - 1.009	0.001	9
	516-994	516-394	K: -■0	—	—	1.01 - 1.09	0.01	9
	516-995	516-395	0: -■0	—	—	1.1 - 1.9	0.1	9
	516-996	516-396	1: -■0	—	—	1 - 9	1	9
	516-997	516-397	2: -■0	—	—	10 - 100	10	10
34	—	—	—	—	—	1.0005		1
	516-128	516-178	K: -■0	—	K: -■1	1.001 - 1.009	0.001	9
	516-129	516-179	0: -■0	—	0: -■1	1.01 - 1.09	0.01	9
	516-130	516-180	1: -■0	—	1: -■1	1.1 - 1.9	0.1	9
	516-131	516-181	2: -■0	—	2: -■1	1 - 5	1	5
						10		1
32	—	—	—	—	—	1.005		1
	516-965	516-365	K: -■0	—	K: -■1	1.01 - 1.09	0.01	9
	516-966	516-366	0: -■0	—	0: -■1	1.1 - 1.9	0.1	9
	516-967	516-367	1: -■0	—	1: -■1	1 - 9	1	9
	516-968	516-368	2: -■0	—	2: -■1	10 - 30	10	3
						60		1

Thin Block Sets

Blocks per set	Order No.		Standard/grade available and **Suffix No.**[*1]			Blocks included in set		
	Steel	CERA	ISO/DIN/JIS	ASME	BS	Size (mm)	Step (mm)	Qty.
9	516-990	—	0: -■0	—	—	0.10 - 0.50	0.05	9
	516-991	—	1: -■0	—	—			
	516-992	—	2: -■0	—	—			

Note: Details of the overall sizes for forms of block are given on page E-3 and the accuracy standards to which they are manufactured are given on page E-5.

*1: Suffix No. (■) for Selecting Standard and Certificate Provided

ISO/DIN/JIS

Suffix No.	Inspection Certificate	Calibration Certificate JCSS
1	✔	
6	✔	✔

Suffix No. 1: Not available for Grade K sets.

ASME

Suffix No.	Inspection Certificate	Calibration Certificate JCSS
1	✔	
6	✔	✔

Suffix No. 1: Not available for Grade K sets.
Suffix No. 6: Only for Grade K sets.

BS

Suffix No.	Inspection Certificate	Calibration Certificate JCSS
1	✔	
6	✔	✔

Suffix No. 1: Not available for Grade K sets.
Suffix No. 6: Only for Grade K sets.

Inspection Certificate

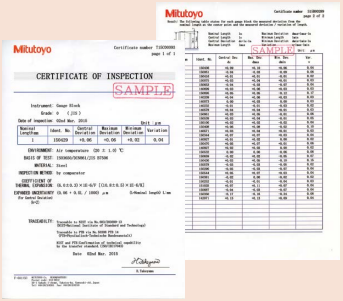

Mitutoyo reserves the right to change any or all aspects of any product specification, including prices, designs and service content, without notice.

PROPRIETARY INSPECTION CERTIFICATE

SPECIFICATIONS

0.001 mm Step Block Sets

Blocks per set	Order No.		Standard/grade available and **Suffix No.**[*1]			Blocks included in set		
	Steel	CERA	ISO/DIN/JIS	ASME	BS	Size (mm)	Step (mm)	Qty.
18	**516-973** **516-974** **516-975** **516-976**	**516-373** **516-374** **516-375** **516-376**	K: **-■0** 0: **-■0** 1: **-■0** 2: **-■0**	— — — —	— — — —	0.991 - 0.999 1.001 - 1.009	0.001 0.001	9 9
9	**516-981** **516-982** **516-983** **516-984**	**516-381** **516-382** **516-383** **516-384**	K: **-■0** 0: **-■0** 1: **-■0** 2: **-■0**	— — — —	K: **-■1** 0: **-■1** 1: **-■1** 2: **-■1**	1.001 - 1.009	0.001	9
9	**516-985** **516-986** **516-987** **516-988**	**516-385** **516-386** **516-387** **516-388**	K: **-■0** 0: **-■0** 1: **-■0** 2: **-■0**	— — — —	— — — —	0.991 - 0.999	0.001	9

Long Block Sets

Blocks per set	Order No.		Standard/grade available and **Suffix No.**[*1]			Blocks included in set		
	Steel	CERA	ISO/DIN/JIS	ASME	BS	Size (mm)	Step (mm)	Qty.
8	**516-540** **516-701** **516-702** **516-703** **516-704**	**516-546** **516-731** **516-732** **516-733** **516-734**	— K: **-■0** 0: **-■0** 1: **-■0** 2: **-■0**	K: **-■6** 00: **-■6** 0: **-■6** 1: **-■6** 2: **-■6**	— — — — —	125 - 175 200 - 250 300 - 500	25 50 100	3 2 3

Wear Block Sets

Blocks per set	Order No.		Standard/grade available and **Suffix No.**[*1]			Blocks included in set		
	Carbide	CERA	ISO/DIN/JIS	ASME	BS	Size (mm)	Step (mm)	Qty.
2	**516-807** **516-806**	**516-832** **516-833**	0: **-■0** 1: **-■0**	0: **-■6** 1: **-■6**	— —	1		2
2	**516-803** **516-802**	**516-830** **516-831**	0: **-■0** 1: **-■0**	0: **-■6** 1: **-■6**	— —	2		2

Inch Block Sets

Blocks per set	Order No.		Standard/grade available and **Suffix No.**[*1]			Blocks included in set		
	Steel	CERA	ISO/DIN/JIS	ASME	BS	Size (in)	Step (in)	Qty.
82	**516-548** **516-905** **516-906** **516-907** **516-908**	**516-556** **516-305** **516-306** **516-307** **516-308**	— — — — —	K: **-■6** 00: **-■6** 0: **-■6** 1: **-■6** 2: **-■6**	— — 0: **-■1** 1: **-■1** 2: **-■1**	0.10005 0.1001 - 0.1009 0.101 - 0.149 0.05 - 0.95 1 - 4	 0.0001 0.001 0.05 1	1 9 49 19 4
81	**516-549** **516-901** **516-902** **516-903** **516-904**	**516-557** **516-301** **516-302** **516-303** **516-304**	— — — — —	K: **-■6** 00: **-■6** 0: **-■6** 1: **-■6** 2: **-■6**	— — 0: **-■1** 1: **-■1** 2: **-■1**	0.1001 - 0.1009 0.101 - 0.149 0.05 - 0.95 1 - 4	0.0001 0.001 0.05 1	9 49 19 4
49	— — **516-910** **516-911** **516-912**	— — — — —	— — — — —	— — — — —	— — 0: **-■1** 1: **-■1** 2: **-■1**	0.1001 - 0.1009 0.101 - 0.109 0.01 - 0.19 0.2 - 0.9 1 - 4	0.0001 0.001 0.01 0.1 1	9 9 19 8 4
35	**516-550** **516-913** **516-914** **516-915** **516-916**	**516-558** **516-313** **516-314** **516-315** **516-316**	— — — — —	K: **-■6** 00: **-■6** 0: **-■6** 1: **-■6** 2: **-■6**	— — 0: **-■1** 1: **-■1** 2: **-■1**	0.10005 0.1001 - 0.1009 0.101 - 0.109 0.11 - 0.19 0.1 - 0.3 0.5, 1, 2, 4	 0.0001 0.001 0.01 0.1	1 9 9 9 3 4

Thin Block Sets

Blocks per set	Order No.		Standard/grade available and **Suffix No.**[*1]			Blocks included in set		
	Steel	CERA	ISO/DIN/JIS	ASME	BS	Size (in)	Step (in)	Qty.
28	**516-551** **516-917** **516-918** **516-919** **516-920**	— — — — —	— — — — —	K: **-■6** 00: **-■6** 0: **-■6** 1: **-■6** 2: **-■6**	— — — — —	0.02005 0.0201 - 0.0209 0.021 - 0.029 0.01 - 0.09	 0.0001 0.001 0.01	1 9 9 9
10	**516-926** **516-927** **516-928**	— — —	— — —	0: **-■6** 1: **-■6** —	0: **-■1** 1: **-■1** 2: **-■1**	0.005 - 0.050	0.005	10

Long Block Sets

Blocks per set	Order No.		Standard/grade available and **Suffix No.**[*1]			Blocks included in set		
	Steel	CERA	ISO/DIN/JIS	ASME	BS	Size (in)	Step (in)	Qty.
8	— — **516-712** **516-713**	**516-564** **516-741** **516-742** **516-743**	— — — —	K: **-■6** 00: **-■6** 0: **-■6** 1: **-■6**	— — — —	5 - 7 8, 10, 12 16, 20	1 2 4	3 3 2

Wear Block Sets

Blocks per set	Order No.		Standard/grade available and **Suffix No.**[*1]			Blocks included in set		
	Carbide	CERA	ISO/DIN/JIS	ASME	BS	Size (in)	Step (in)	Qty.
2	**516-809** **516-808**	**516-836** **516-837**	— —	0: **-■6** 1: **-■6**	— —	0.05		2
2	**516-805** **516-804**	**516-834** **516-835**	— —	0: **-■6** 1: **-■6**	— —	0.1		2

Note: Details of the overall sizes for forms of block are given on page E-3 and the accuracy standards to which they are manufactured are given on page E-5.

E

Micrometer Inspection Gauge Block Sets SERIES 516

- Dedicated gauge block sets for micrometer inspection.
  Sets **516-106/7/8** and **516-322/3** are recommended for checking the maximum permissible error of micrometers due to the choice of block sizes ensuring that the instrument is checked through a full rotation of the spindle over the range 0 to 25 mm (or 0 to 1 in).
  Sets **516-115/6/7**, **516-165/6** and **516-177** contain blocks in 25 mm (or 1 in) steps for aiding inspection of large micrometers in conjunction with one of the abovementioned sets.
  Sets **516-580/1/2**, **516-390/1/2** are dedicated to the QuantuMike with its 2 mm/rev spindle feed.

Steel



Steel 10-block set

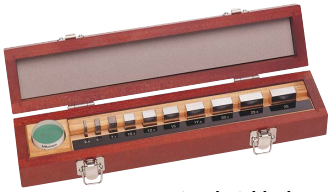

Steel 10-block set



Steel 8-block set

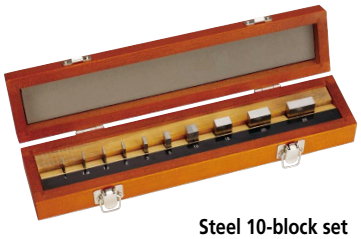

Steel 10-block set

CERA

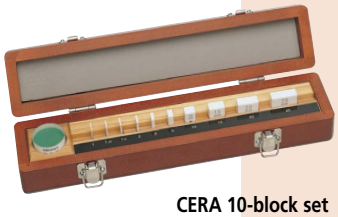

CERA 10-block set



CERA 10-block set



CERA 8-block set



CERA 10-block set

Gauge Block Sets for Micrometer Inspection

A set consisting of a Micro Checker and gauge blocks for micrometer inspection.

(516-132/3/4/5/6/7)



- **Micro Checker**
  Can clamp a stack of gauge blocks to be used for micrometer inspection.



516-607

Typical application



(The gauge block and optical parallel shown are optional accessories.)

SPECIFICATIONS

Metric Micro Checker (holder only)

Order No.	516-607
Applicable gauge block sets	**516-106/107/108, 516-156/157/158**
Applicable gauge block sizes (mm)	2.5, 5.1, 7.7, 10.3, 12.9, 15, 17.6, 20.2, 22.8, 25

Inch Micro Checker (holder only)

Order No.	516-608
Applicable gauge block sets	**516-921/922/923, 516-321/322/323**
Applicable gauge block sizes (in)	0.105, 0.210, 0.315, 0.420, 0.5, 0.605, 0.710, 0.815, 0.920, 1

Mitutoyo reserves the right to change any or all aspects of any product specification, including prices, designs and service content, without notice.

PROPRIETARY INSPECTION CERTIFICATE

*1: Suffix No. (■) for Selecting Standard and Certificate Provided

ISO/DIN/JIS

Suffix No.	Inspection Certificate	Calibration Certificate JCSS
1	✔	
6	✔	✔

Suffix No. 1: Not available for Grade K sets.

ASME

Suffix No.	Inspection Certificate	Calibration Certificate JCSS
1	✔	
6	✔	✔

Suffix No. 1: Not available for Grade K sets.
Suffix No. 6: Only for Grade K sets.

BS

Suffix No.	Inspection Certificate	Calibration Certificate JCSS
1	✔	

Inspection Certificate

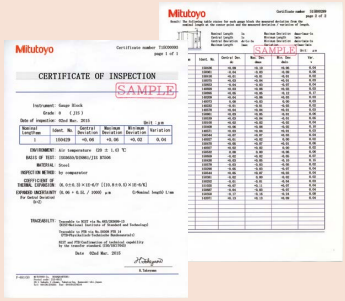

SPECIFICATIONS

Metric Block Sets

Blocks per set	Order No. Steel	Order No. CERA	Standard/grade available and Suffix No.*1 ISO/DIN/JIS	ASME	BS	Blocks included in set
16	516-111 516-112 516-113	516-161 516-162 516-163	0: -■0 1: -■0 2: -■0	— — —	— — —	1.00, 1.25, 1.5, 2, 3, 5, 10, 15, 20, 25, 25.25, 30, 35, 40, 45, 50 mm, Cerastone, Optical parallels (t=12 mm, 25 mm)
10	516-977 516-978 516-979 516-980	— 516-378 516-379 516-380	K: -■0 0: -■0 1: -■0 2: -■0	— — — —	— — — —	1.00, 1.25, 1.50, 2, 3, 5, 10, 15, 20, 25 mm, Optical parallel (t=12 mm)
10	516-103 516-101 —	516-152 516-153 516-154	0: -■0 1: -■0 2: -■0	0: -■6 1: -■6 —	— — —	1.00, 1.25, 1.50, 2, 3, 5, 10, 15, 20, 25 mm
10	516-580 516-581 516-582	516-390 516-391 516-392	0: -■0 1: -■0 2: -■0	— — —	— — —	2.2, 4.8, 7.8, 10.4, 12, 15.2, 17.4, 19.6, 22.6, 25 mm
10	516-106 516-107 516-108	516-156 516-157 516-158	0: -■0 1: -■0 2: -■0	— — —	— — —	2.5, 5.1, 7.7, 10.3, 12.9, 15, 17.6, 20.2, 22.8, 25 mm, Optical parallel (t=12 mm)
10	516-132 516-133 516-134	516-182 516-183 516-184	0: -■0 1: -■0 2: -■0	— — —	— — —	1.25, 1.50, 1, 2, 3, 5, 10, 15, 20, 25 mm, Micro Checker, Optical parallel (t=12 mm)
10	516-135 516-136 516-137	516-185 516-186 516-187	0: -■0 1: -■0 2: -■0	— — —	— — —	2.5, 5.1, 7.7, 10.3, 12.9, 15, 17.6, 20.2, 22.8, 25 mm, Micro Checker, Optical parallel (t=12 mm)
8	— — 516-115 516-116 516-117	516-547 516-164 516-165 516-166 516-167	— K: -■0 0: -■0 1: -■0 2: -■0	K: -■6 00: -■6 0: -■6 1: -■6 2: -■6	— — — — —	25, 50, 75, 100, 125, 150, 175, 200 mm

Inch Block Sets

Blocks per set	Order No. Steel	Order No. CERA	Standard/grade available and Suffix No.*1 ISO/DIN/JIS	ASME	BS	Blocks included in set
10	516-528 516-529 516-530	516-318 516-319 516-320	— — —	00: -■6 0: -■6 1: -■6	0: -■1 1: -■1 2: -■1	0.087, 0.189, 0.307, 0.409, 0.472, 0.598, 0.669, 0.772, 0.890, 1 in
10	516-552 516-921 516-922 516-923	516-559 516-321 516-322 516-323	— — — —	K: -■6 00: -■6 0: -■6 1: -■6	— 0: -■1 1: -■1 2: -■1	0.105, 0.210, 0.315, 0.420, 0.500, 0.605, 0.710, 0.815, 0.920, 1 in, Optical parallel (t=0.5 in)
10	516-553 516-138 516-139 516-140	516-560 516-188 516-189 516-190	— — — —	K: -■6 00: -■6 0: -■6 1: -■6	— 0: -■1 1: -■1 2: -■1	0.105, 0.210, 0.315, 0.420, 0.500, 0.605, 0.710, 0.815, 0.920, 1 in, Micro checker, Optical parallel (t=0.5 in)
9	516-554 516-929 516-930 516-931 516-932	516-561 516-333 516-334 516-335 516-336	— — — — —	K: -■6 00: -■6 0: -■6 1: -■6 2: -■6	— — — — —	0.0625, 0.100, 0.125, 0.200, 0.250, 0.300, 0.500, 1, 2 in, Optical parallel (t=0.5 in)
9	516-555 516-141 516-142 516-143 516-144	516-562 516-191 516-192 516-193 516-194	— — — — —	K: -■6 00: -■6 0: -■6 1: -■6 2: -■6	— — — — —	0.0625, 0.100, 0.125, 0.200, 0.250, 0.300, 0.500, 1, 2 in, Micro Checker, Optical parallel (t=0.5 in)
9	— — 516-934 516-935 516-936	516-563 516-329 516-330 516-331 516-332	— — — — —	K: -■6 00: -■6 0: -■6 1: -■6 2: -■6	— — — — —	0.0625, 0.100, 0.125, 0.200, 0.250, 0.300, 0.500, 1, 2 in
8	516-126 516-127	516-176 516-177	— —	0: -■6 1: -■6	— —	1, 2, 3, 4, 5, 6, 7, 8 in

SERIES 516 – Caliper Inspection Gauge Block Sets

SPECIFICATIONS

Metric Block Sets

Blocks per set	Order No. Steel	Order No. CERA	Standard/grade available and Suffix No. ISO/DIN/JIS	ASME	BS	Blocks included in set
5	— —	— 516-174	— 2: -10	— —	— —	5 pcs.: 10.3, 24.5, 50, 75, 100 mm, Ceramic plain jaws, Holder (250 mm), Glove
4	516-526 516-527	516-566 516-567	1: -10 2: -10	— —	— —	4 pcs.: 10, 30, 50, 125 mm, Setting ring (ø4 mm, ø10 mm), Pin gage (ø10 mm), Glove
3	516-124 516-125	516-150 516-151	1: -10 2: -10	— —	— —	3 pcs.: 30, 41.3, 131.4 mm, Setting ring (ø4 mm, ø25 mm), Glove
2	516-122 516-123	516-172 516-173	1: -10 2: -10	— —	— —	2 pcs.: 41.3, 131.4 mm, Setting ring (ø20 mm), Glove

E

Mitutoyo reserves the right to change any or all aspects of any product specification, including prices, designs and service content, without notice.

Mitutoyo

Individual Metric Rectangular Gauge Blocks

- If using only one length repeatedly, it is suggested to purchase individual gauge blocks.
- Nominal sizes which are not included in the chart below can be supplied custom-made on request.
- Each Grade K gauge block to ISO/DIN/JIS, BS or ASME standard is supplied with a Certificate of Calibration which certifies that the gauge block was calibrated by interferometry.



SPECIFICATIONS

Metric Blocks

Length (mm)	Order No.*1	
	Steel	CERA
0.1	**611821**	—
0.11	**611860**	—
0.12	**611861**	—
0.13	**611862**	—
0.14	**611863**	—
0.15	**611822**	—
0.16	**611864**	—
0.17	**611865**	—
0.18	**611866**	—
0.19	**611867**	—
0.2	**611823**	—
0.21	**611868**	—
0.22	**611869**	—
0.23	**611870**	—
0.24	**611871**	—
0.25	**611824**	—
0.26	**611872**	—
0.27	**611873**	—
0.28	**611874**	—
0.29	**611875**	—
0.3	**611825**	—
0.31	**611876**	—
0.32	**611877**	—
0.33	**611878**	—
0.34	**611879**	—
0.35	**611826**	—
0.36	**611880**	—
0.37	**611881**	—
0.38	**611882**	—
0.39	**611883**	—
0.4	**611827**	—
0.41	**611884**	—
0.42	**611885**	—
0.43	**611886**	—
0.44	**611887**	—
0.45	**611828**	—
0.46	**611888**	—
0.47	**611889**	—
0.48	**611890**	—
0.49	**611891**	—
0.5	**611506**	**613506**
0.51	**611892**	—
0.52	**611893**	—
0.53	**611894**	—
0.54	**611895**	—
0.55	**611896**	—
0.56	**611897**	—
0.57	**611898**	—
0.58	**611899**	—
0.59	**611900**	—
0.6	**611901**	—
0.61	**611902**	—
0.62	**611903**	—
0.63	**611904**	—
0.64	**611905**	—
0.65	**611906**	—
0.66	**611907**	—
0.67	**611908**	—
0.68	**611909**	—
0.69	**611910**	—
0.7	**611911**	—
0.71	**611912**	—
0.72	**611913**	—
0.73	**611914**	—
0.74	**611915**	—
0.75	**611916**	—
0.76	**611917**	—
0.77	**611918**	—
0.78	**611919**	—
0.79	**611920**	—
0.8	**611921**	—
0.81	**611922**	—
0.82	**611923**	—
0.83	**611924**	—
0.84	**611925**	—
0.85	**611926**	—
0.86	**611927**	—
0.87	**611928**	—
0.88	**611929**	—
0.89	**611930**	—
0.9	**611931**	—
0.91	**611932**	—
0.92	**611933**	—
0.93	**611934**	—
0.94	**611935**	—
0.95	**611936**	—
0.96	**611937**	—
0.97	**611938**	—
0.98	**611939**	—
0.99	**611940**	—
0.991	**611551**	**613551**
0.992	**611552**	**613552**
0.993	**611553**	**613553**
0.994	**611554**	**613554**
0.995	**611555**	**613555**
0.996	**611556**	**613556**
0.997	**611557**	**613557**
0.998	**611558**	**613558**
0.999	**611559**	**613559**
1	**611611**	**613611**
1.0005	**611520**	**613520**
1.001	**611521**	**613521**
1.002	**611522**	**613522**
1.003	**611523**	**613523**
1.004	**611524**	**613524**
1.005	**611525**	**613525**
1.006	**611526**	**613526**
1.007	**611527**	**613527**
1.008	**611528**	**613528**
1.009	**611529**	**613529**
1.01	**611561**	**613561**
1.02	**611562**	**613562**
1.03	**611563**	**613563**
1.04	**611564**	**613564**
1.05	**611565**	**613565**
1.06	**611566**	**613566**
1.07	**611567**	**613567**
1.08	**611568**	**613568**
1.09	**611569**	**613569**
1.1	**611570**	**613570**
1.11	**611571**	**613571**
1.12	**611572**	**613572**
1.13	**611573**	**613573**
1.14	**611574**	**613574**
1.15	**611575**	**613575**
1.16	**611576**	**613576**
1.17	**611577**	**613577**
1.18	**611578**	**613578**
1.19	**611579**	**613579**

Note: Details of the overall sizes for forms of block are given on page E-3 and the accuracy standards to which they are manufactured are given on page E-5.

PROPRIETARY INSPECTION CERTIFICATE

*1: Suffix No. (-■■■) for Selecting Standard and Certificate Provided

ISO/DIN/JIS

Suffix No.	Grade	Inspection Certificate	Calibration Certificate	
			JCSS	RvA
-016	K	✔	✔	
-021	0	✔		
-026	0	✔	✔	
-031	1	✔		
-036	1	✔	✔	
-041	2	✔		
-046	2	✔	✔	

ASME

Suffix No.	Grade	Inspection Certificate	Calibration Certificate
			JCSS
-516	K	✔	✔
-521	00	✔	
-531	0	✔	
-541	1	✔	
-551	2	✔	

BS

Suffix No.	Grade	Inspection Certificate	Calibration Certificate
			JCSS
-116	K	✔	✔
-121	0	✔	
-126	0	✔	✔
-131	1	✔	
-136	1	✔	✔
-141	2	✔	
-146	2	✔	✔

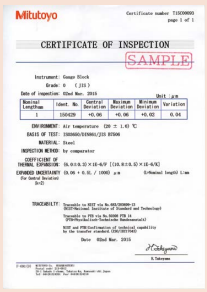
Mitutoyo
CERTIFICATE OF INSPECTION
SAMPLE

Inspection Certificate

E

Mitutoyo reserves the right to change any or all aspects of any product specification, including prices, designs and service content, without notice.

Dimensions

Unit: mm

Nominal length:
0.1 mm to 5.5 mm
(0.004 in to 0.25 in)

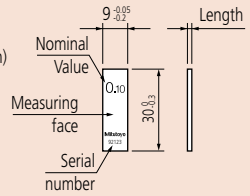

Nominal length:
6 mm to 10 mm
(0.3 in to 0.4 in)

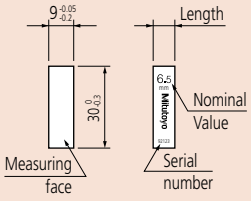

Nominal length:
10.3 mm to 100 mm
(0.45 in to 4 in)

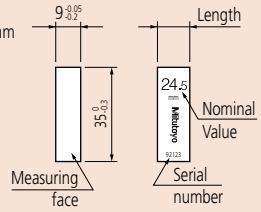

Nominal length 125 mm to 1000 mm (5 in to 20 in)

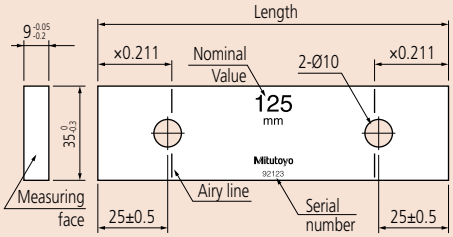

Length (mm)	Order No.*1	
	Steel	CERA
1.2	**611580**	**613580**
1.21	**611581**	**613581**
1.22	**611582**	**613582**
1.23	**611583**	**613583**
1.24	**611584**	**613584**
1.25	**611585**	**613585**
1.26	**611586**	**613586**
1.27	**611587**	**613587**
1.28	**611588**	**613588**
1.29	**611589**	**613589**
1.3	**611590**	**613590**
1.31	**611591**	**613591**
1.32	**611592**	**613592**
1.33	**611593**	**613593**
1.34	**611594**	**613594**
1.35	**611595**	**613595**
1.36	**611596**	**613596**
1.37	**611597**	**613597**
1.38	**611598**	**613598**
1.39	**611599**	**613599**
1.4	**611600**	**613600**
1.41	**611601**	**613601**
1.42	**611602**	**613602**
1.43	**611603**	**613603**
1.44	**611604**	**613604**
1.45	**611605**	**613605**
1.46	**611606**	**613606**
1.47	**611607**	**613607**
1.48	**611608**	**613608**
1.49	**611609**	**613609**
1.5	**611641**	**613641**
1.6	**611516**	**613516**
1.7	**611517**	**613517**
1.8	**611518**	**613518**
1.9	**611519**	**613519**
2	**611612**	**613612**
2.0005	**611690**	—
2.001	**611691**	—
2.002	**611692**	—
2.003	**611693**	—
2.004	**611694**	—
2.005	**611695**	—
2.006	**611696**	—
2.007	**611697**	—
2.008	**611698**	—
2.009	**611699**	—
2.01	**611701**	—
2.02	**611702**	—
2.03	**611703**	—
2.04	**611704**	—
2.05	**611705**	—
2.06	**611706**	—
2.07	**611707**	—
2.08	**611708**	—
2.09	**611709**	—
2.1	**611710**	—
2.11	**611711**	—
2.12	**611712**	—
2.13	**611713**	—
2.14	**611714**	—
2.15	**611715**	—
2.16	**611716**	—

Length (mm)	Order No.*1	
	Steel	CERA
2.17	**611717**	—
2.18	**611718**	—
2.19	**611719**	—
2.2	**611720**	—
2.21	**611721**	—
2.22	**611722**	—
2.23	**611723**	—
2.24	**611724**	—
2.25	**611725**	—
2.26	**611726**	—
2.27	**611727**	—
2.28	**611728**	—
2.29	**611729**	—
2.3	**611730**	—
2.31	**611731**	—
2.32	**611732**	—
2.33	**611733**	—
2.34	**611734**	—
2.35	**611735**	—
2.36	**611736**	—
2.37	**611737**	—
2.38	**611738**	—
2.39	**611739**	—
2.4	**611740**	—
2.41	**611741**	—
2.42	**611742**	—
2.43	**611743**	—
2.44	**611744**	—
2.45	**611745**	—
2.46	**611746**	—
2.47	**611747**	—
2.48	**611748**	—
2.49	**611749**	—
2.5	**611642**	**613642**
2.6	**611750**	—
2.7	**611751**	—
2.8	**611752**	—
2.9	**611753**	—
3	**611613**	**613613**
3.5	**611643**	**613643**
4	**611614**	**613614**
4.5	**611644**	**613644**
5	**611615**	**613615**
5.1	**611850**	**613850**
5.5	**611645**	**613645**
6	**611616**	**613616**
6.5	**611646**	**613646**
7	**611617**	**613617**
7.5	**611647**	**613647**
7.7	**611851**	**613851**
8	**611618**	**613618**
8.5	**611648**	**613648**
9	**611619**	**613619**
9.5	**611649**	**613649**
10	**611671**	**613671**
10.3	**611852**	**613852**
10.5	**611650**	**613650**
11	**611621**	**613621**
11.5	**611651**	**613651**
12	**611622**	**613622**
12.5	**611652**	**613652**
12.9	**611853**	**613853**

Length (mm)	Order No.*1	
	Steel	CERA
13	**611623**	**613623**
13.5	**611653**	**613653**
14	**611624**	**613624**
14.5	**611654**	**613654**
15	**611625**	**613625**
15.5	**611655**	**613655**
16	**611626**	**613626**
16.5	**611656**	**613656**
17	**611627**	**613627**
17.5	**611657**	**613657**
17.6	**611854**	**613854**
18	**611628**	**613628**
18.5	**611658**	**613658**
19	**611629**	**613629**
19.5	**611659**	**613659**
20	**611672**	**613672**
20.2	**611855**	**613855**
20.5	**611660**	**613660**
21	**611631**	**613631**
21.5	**611661**	**613661**
22	**611632**	**613632**
22.5	**611662**	**613662**
22.8	**611856**	**613856**
23	**611633**	**613633**
23.5	**611663**	**613663**
24	**611634**	**613634**
24.5	**611664**	**613664**
25	**611635**	**613635**
25.25	**611754**	**613754**
30	**611673**	**613673**
35	**611755**	**613755**
40	**611674**	**613674**
41.3	**611857**	**613857**
45	**611756**	**613756**
50	**611675**	**613675**
60	**611676**	**613676**
70	**611677**	**613677**
75	**611801**	**613801**
80	**611678**	**613678**
90	**611679**	**613679**
100	**611681**	**613681**
125	**611802**	**613802**
131.4	**611858**	**613858**
150	**611803**	**613803**
175	**611804**	**613804**
200	**611682**	**613682**
250	**611805**	**613805**
300	**611683**	**613683**
400	**611684**	**613684**
500	**611685**	**613685**
600	**611840**	—
700	**611841**	—
750	**611842**	—
800	**611843**	—
900	**611844**	—
1000	**611845**	—

Metric Wear Blocks

Length (mm)	Order No.*1 Tungsten carbide
1	**612611**
2	**612612**

Note: Details of the overall sizes for forms of block are given on page E-3 and the accuracy standards to which they are manufactured are given on page E-5.

Mitutoyo reserves the right to change any or all aspects of any product specification, including prices, designs and service content, without notice.

Individual Inch Rectangular Gauge Blocks

SPECIFICATIONS

Inch Blocks

Length (in)	Order No.*1	
	Steel	CERA
0.004	**611304**	—
0.005	**611305**	—
0.006	**611306**	—
0.007	**611307**	—
0.008	**611308**	—
0.009	**611309**	—
0.01	**611310**	—
0.011	**611311**	—
0.012	**611312**	—
0.013	**611313**	—
0.014	**611314**	—
0.015	**611315**	—
0.016	**611316**	—
0.017	**611317**	—
0.018	**611318**	—
0.019	**611319**	—
0.02	**611320**	—
0.02005	**611240**	—
0.0201	**611231**	—
0.0202	**611232**	—
0.0203	**611233**	—
0.0204	**611234**	—
0.0205	**611235**	—
0.0206	**611236**	—
0.0207	**611237**	—
0.0208	**611238**	—
0.0209	**611239**	—
0.021	**611321**	—
0.022	**611322**	—
0.023	**611323**	—

Length (in)	Order No.*1	
	Steel	CERA
0.024	**611324**	—
0.025	**611325**	—
0.026	**611326**	—
0.027	**611327**	—
0.028	**611328**	—
0.029	**611329**	—
0.03	**611330**	—
0.031	**611331**	—
0.03125 (1/32)	**611101**	**613103**
0.032	**611332**	—
0.033	**611333**	—
0.034	**611334**	—
0.035	**611335**	—
0.036	**611336**	—
0.037	**611337**	—
0.038	**611338**	—
0.039	**611339**	—
0.04	**611340**	—
0.041	**611341**	—
0.042	**611342**	—
0.043	**611343**	—
0.044	**611344**	—
0.045	**611345**	—
0.046	**611346**	—
0.046875 (3/64)	**611102**	**613104**
0.047	**611347**	—
0.048	**611348**	—
0.049	**611349**	—
0.05	**611105**	**613105**
0.06	**611106**	—

Length (in)	Order No.*1	
	Steel	CERA
0.0625	**611303**	**613303**
0.07	**611107**	—
0.078125 (5/64)	**611103**	**613100**
0.08	**611108**	—
0.09	**611109**	—
0.09375 (3/32)	**611104**	**613101**
0.1	**611191**	**613191**
0.100025	**611111**	**613110**
0.10005	**611135**	**613135**
0.100075	**611112**	**613111**
0.1001	**611121**	**613121**
0.1002	**611122**	**613122**
0.1003	**611123**	**613123**
0.1004	**611124**	**613124**
0.1005	**611125**	**613125**
0.1006	**611126**	**613126**
0.1007	**611127**	**613127**
0.1008	**611128**	**613128**
0.1009	**611129**	**613129**
0.101	**611141**	**613141**
0.102	**611142**	**613142**
0.103	**611143**	**613143**
0.104	**611144**	**613144**
0.105	**611145**	**613145**
0.106	**611146**	**613146**
0.107	**611147**	**613147**
0.108	**611148**	**613148**
0.109	**611149**	**613149**
0.109375 (7/64)	**611110**	**613102**

Note: Details of the overall sizes for forms of block are given on page E-3 and the accuracy standards to which they are manufactured are given on page E-5.

*1: Suffix No. (-■■■) for Selecting Standard and Certificate Provided

ASME

Suffix No.	Grade	Inspection Certificate	Calibration Certificate JCSS
-516	K	✔	✔
-521	00	✔	
-531	0	✔	
-541	1	✔	
-551	2	✔	

BS

Suffix No.	Grade	Inspection Certificate	Calibration Certificate JCSS
-121	0	✔	
-131	1	✔	
-141	2	✔	

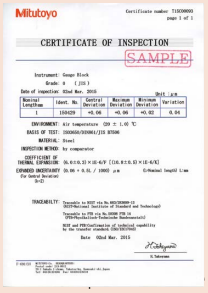
Mitutoyo
CERTIFICATE OF INSPECTION
SAMPLE

Inspection Certificate

Mitutoyo reserves the right to change any or all aspects of any product specification, including prices, designs and service content, without notice.

Dimensions

Unit: mm

Nominal length:
0.1 mm to 5.5 mm
(0.004 in to 0.25 in)

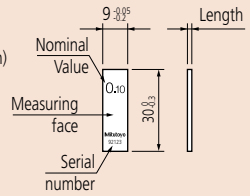

Nominal length:
6 mm to 10 mm
(0.3 in to 0.4 in)

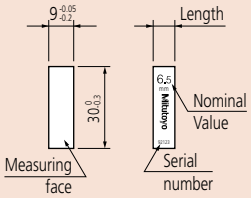

Nominal length:
10.3 mm to 100 mm
(0.45 in to 4 in)

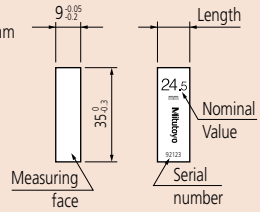

Nominal length 125 mm to 1000 mm (5 in to 20 in)

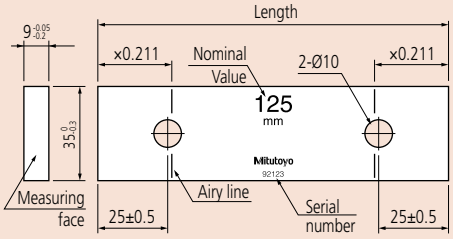

SPECIFICATIONS

Inch Blocks

Length (in)	Order No.*1	
	Steel	CERA
0.11	**611150**	**613150**
0.111	**611151**	**613151**
0.112	**611152**	**613152**
0.113	**611153**	**613153**
0.114	**611154**	**613154**
0.115	**611155**	**613155**
0.116	**611156**	**613156**
0.117	**611157**	**613157**
0.118	**611158**	**613158**
0.119	**611159**	**613159**
0.12	**611160**	**613160**
0.121	**611161**	**613161**
0.122	**611162**	**613162**
0.123	**611163**	**613163**
0.124	**611164**	**613164**
0.125	**611165**	**613165**
0.126	**611166**	**613166**
0.127	**611167**	**613167**
0.128	**611168**	**613168**
0.129	**611169**	**613169**
0.13	**611170**	**613170**
0.131	**611171**	**613171**
0.132	**611172**	**613172**
0.133	**611173**	**613173**
0.134	**611174**	**613174**
0.135	**611175**	**613175**
0.136	**611176**	**613176**
0.137	**611177**	**613177**
0.138	**611178**	**613178**

Length (in)	Order No.*1	
	Steel	CERA
0.139	**611179**	**613179**
0.14	**611180**	**613180**
0.141	**611181**	**613181**
0.142	**611182**	**613182**
0.143	**611183**	**613183**
0.144	**611184**	**613184**
0.145	**611185**	**613185**
0.146	**611186**	**613186**
0.147	**611187**	**613187**
0.148	**611188**	**613188**
0.149	**611189**	**613189**
0.15	**611115**	**613115**
0.16	**611116**	**613116**
0.17	**611117**	**613117**
0.18	**611118**	**613118**
0.19	**611119**	**613119**
0.2	**611192**	**613192**
0.21	**611221**	**613221**
0.25	**611212**	**613212**
0.3	**611193**	**613193**
0.315	**611209**	**613209**
0.35	**611213**	**613213**
0.375 (3/8)	**611113**	**613112**
0.4	**611194**	**613194**
0.420	**611210**	**613210**
0.45	**611214**	**613214**
0.5	**611195**	**613195**
0.55	**611215**	**613215**
0.6	**611196**	**613196**

Length (in)	Order No.*1	
	Steel	CERA
0.605	**611211**	**613211**
0.65	**611216**	**613216**
0.7	**611197**	**613197**
0.710	**611220**	**613220**
0.75	**611217**	**613217**
0.8	**611198**	**613198**
0.815	**611226**	**613226**
0.85	**611218**	**613218**
0.9	**611199**	**613199**
0.920	**611227**	**613227**
0.95	**611219**	**613219**
1	**611201**	**613201**
2	**611202**	**613202**
3	**611203**	**613203**
4	**611204**	**613204**
5	**611205**	**613205**
6	**611206**	**613206**
7	**611207**	**613207**
8	**611208**	**613208**
10	**611222**	**613222**
12	**611223**	**613223**
16	**611224**	**613224**
20	**611225**	**613225**

Inch Wear Blocks

Length (in)	Order No.*1 Tungsten carbide
0.05	**612105**
0.1	**612191**

Note: Details of the overall sizes for forms of block are given on page E-3 and the accuracy standards to which they are manufactured are given on page E-5.
4 inch or more is not listed in the standard of British Standards Institution.

E

Rectangular Gauge Block Accessories SERIES 516

- Accessory sets for extending the range of application of rectangular gauge blocks. For example, constructing temporary snap gages for small batches of product where custom gages would be uneconomical to manufacture.
- Available in 22-piece and 14-piece sets. Each accessory is also available separately for applications where a full set is not needed.
- Can be used with steel or CERA blocks.



516-601
(22 pcs.)



516-602
(14 pcs.)

SPECIFICATIONS

Item Description	Order No.	Nominal capacity/ dimension (mm)	Set		Quantity Supplied
			22 pcs. **516-601**	14 pcs. **516-602**	
Holder	**619002**	15 to 60		✔	1 pc.
	619003	5 to 100	✔	✔	
	619004	15 to 160	✔	✔	
	619005	20 to 250	✔	✔	
Base	**619009**	35	✔	✔	
Half-round jaw	**619010***	2	✔	✔	One pair (2 pcs.)
	619011*	5	✔	✔	
	619012*	8	✔	✔	
	619013*	12	✔		
	619014*	20	✔		
Plain jaw	**619018***	160	✔		
Scriber point	**619019**	—	✔	✔	1 pc.
Center point	**619020**	—	✔	✔	
Tram point	**619021***	—	✔		One pair (2 pcs.)
Triangular straightedge	**619022**	100	✔	✔	1 pc.
	619023	160	✔		

* A single piece is supplied for each Order No., except for half-round jaws, plain jaws (B type) and tram points, which are supplied as a two-pack.

Mitutoyo reserves the right to change any or all aspects of any product specification, including prices, designs and service content, without notice.

Typical application 1



Accessories used in application 1:
Half-round jaw (**619013**) 2 pcs.
Holder (**619002**) 1 pc.
Gauge block

Typical application 2



Accessories used in application 2:
Base (**619009**) 1 pc.
Holder (**619003**) 1 pc.
Scriber point (**619019**) 1 pc.
Gauge block

Typical application 3



Setting a bore gage using a holder with a pair of Type I half-round jaws arranged as flat contact surfaces

Holder

Thickness=15 mm
Width=29.5 mm

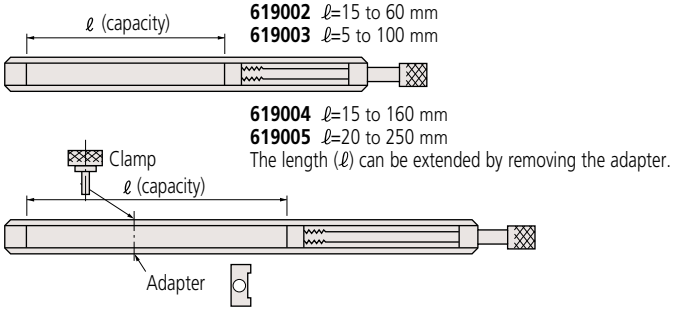

619002 ℓ=15 to 60 mm
619003 ℓ=5 to 100 mm
619004 ℓ=15 to 160 mm
619005 ℓ=20 to 250 mm
The length (ℓ) can be extended by removing the adapter.

Base **619009**

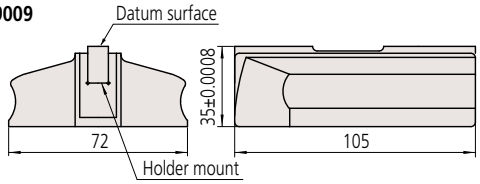

Flatness of the datum surface 0.5 µm
Parallelism 0.8 µm
Flatness of the bottom surface 1 µm

Half-round jaws

Type I

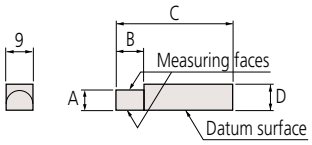

Flatness of the datum surface 0.5 µm
Parallelism of A 0.5 µm

Type II

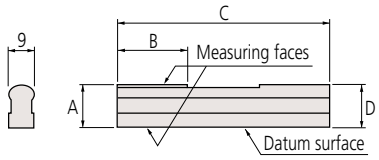

Order No.	Type	Size (mm)	A (mm)	B (mm)	C (mm)	D (mm)
619010*	I	2	2±0.0005	5.5	40	7.5
619011*		5	5±0.0005	15.5	45	7.5
619012*		8	8±0.0005	20	50	8.5
619013*	II	12	12±0.0005	25	75	13
619014*		20	20±0.0005	25	125	20.5

Plain jaw (B type) **619018***

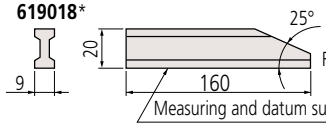

Flatness of the datum surface 1 µm

Scriber point **619019**

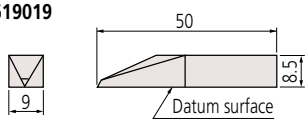

Flatness of the datum surface 0.5 µm

Center point **619020**

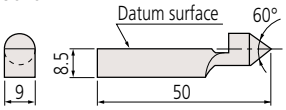

Eccentricity tolerance of the point ±10 µm
Flatness of the datum surface 0.5 µm

Tram point **619021***

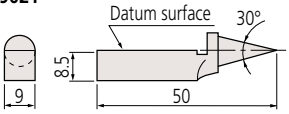

Eccentricity tolerance of the point ±10 µm
Flatness of the datum surface 0.5 µm

Triangular straightedge (for handheld use only)

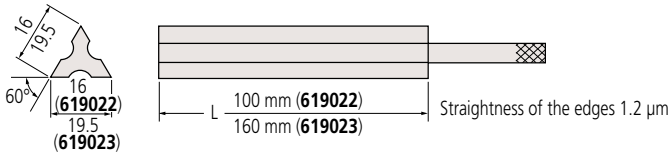

Straightness of the edges 1.2 µm

* A single piece is supplied for each Order No., except for half-round jaws, plain jaws (B type) and tram points, which are supplied as a two-pack.

E

Mitutoyo reserves the right to change any or all aspects of any product specification, including prices, designs and service content, without notice.

Accessories for Rectangular Gauge Blocks over 100 mm SERIES 516

- Specially designed for long rectangular gauge blocks of 100 mm and over which have two coupling holes in the body: coupling of two long gauge blocks, a stack of regular gauge blocks and attachment of jaws is possible.
- These accessories can be used for long steel or CERA blocks.



516-605
(14 pcs.)

SPECIFICATIONS

Set Order No.	Order No.	Description	Quantity Supplied
516-605	619031	Connector A	1 pc.
	619032	Connector B	
	619033	Connector C	
	619034	Connector D	
	619035	Connector E	
	619036	Adapter	3 pcs.
	619009	Base	1 pc.
	619018	Plain jaw (B-type)	2 pcs.
	619013	Half-round jaw	
	619019	Scriber point	1 pc.

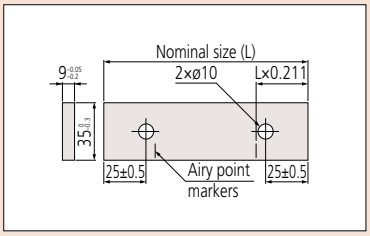

Coupling holes in long gauge blocks

Connector A 619031

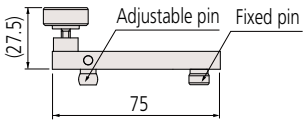

Used for directly coupling two long gauge blocks.

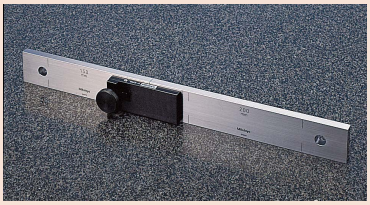

Using an A-type connector

Connectors B and C

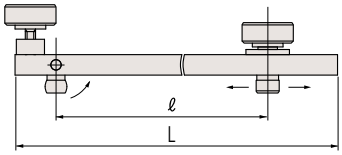

Unit: mm

Order No.	ℓ (max.)	L		Adapter Qty.
619032	90	126	Connector B	2
619033	200	236	Connector C	



Adapter (2 pcs.) **619036**

In addition to connecting long gauge blocks, the holders can also connect long gauge blocks with other types of gauge blocks inserted in between. Holder B is for gauge blocks with nominal size of 40 mm or less, and holder C for gauge blocks with nominal size of 150 mm or less (holder C can also be used to connect hole-less gauge blocks of 100 mm or less with various types of jaw). Adapters can be used to attach jaws on the edges of long gauge blocks.



Use of B-type connectors in gage construction

Mitutoyo reserves the right to change any or all aspects of any product specification, including prices, designs and service content, without notice.

Typical application



Setting a dial test indicator to a long-gauge-block stack attached to the base with a D-type connector

Connector D 619034

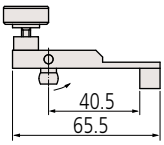

Used for attaching a long gauge block directly to the base.

Connector E 619035

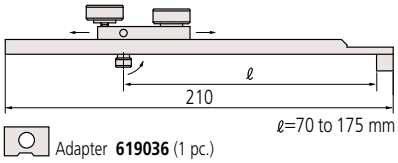

Adapter **619036** (1 pc.)

Used for attaching a long gauge block to the base over a stack of regular gauge blocks wrung between the base and long gauge block. The length ℓ is highly adjustable to accommodate the variable length of the stack.

Base 619009

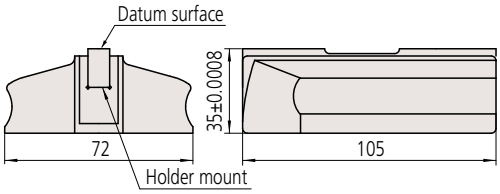

Flatness of the datum surface 0.5 µm
Parallelism 0.8 µm
Flatness of the bottom surface 1 µm

Plain jaw (B-type) 619018

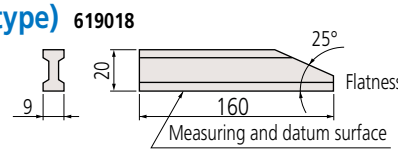

Flatness of the datum surface 1 µm

Half-round jaw 619013

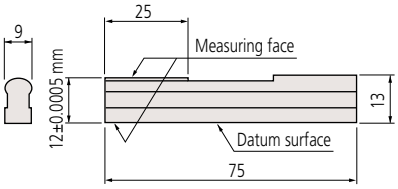

Flatness of the datum surface 0.5 µm
Parallelism 0.5 µm

Scriber point 619019

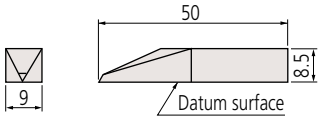

Flatness of the datum surface 0.5 µm

Example of use of accessories with long gauge blocks

The table below shows the appropriate combination of long rectangular gauge blocks and accessories for making inside and outside measurements in the approximate range 300 mm to 1000 mm in 100 mm steps. The numbers in the table represent the number of gauge blocks or accessories in use. Note that the ranges shown do not take into account the combined thickness of the half-round jaws for inside measurement (24 mm) and the length of any regular gauge block stack used.

Items		Order No.	300 mm		400 mm		500 mm		600 mm		700 mm		800 mm		900 mm		1000 mm	
			Inner	Outer	Inner	Outer	Inner	Outer	Inner	Outer	Inner	Inner	Inner	Outer	Inner	Outer	Inner	Outer
Rectangular gauge block (nominal dimension)	200 mm	**611682**							1	1								
	300 mm	**611683**	1	1							1	1	1	1				
	400 mm	**611684**			1	1			1	1	1	1			1	1		
	500 mm	**611685**					1	1					1	1	1	1	2	2
Connector A		**619031**							1	1	1	1	1	1	1	1	1	1
Connector B*		**619032**	2		2		2		2		2		2		2		2	
Half-round jaws 2 pcs./set		**619013**	2		2		2		2		2		2		2		2	
Adapter		**619036**	(2)		(2)		(2)		(2)		(2)		(2)		(2)		(2)	

* Provided with adapters (2 pcs.).

Mitutoyo reserves the right to change any or all aspects of any product specification, including prices, designs and service content, without notice.

Metric/Inch Square Gauge Block Sets
SERIES 516 — Metric Block Sets, Long Block Sets, Wear Block Sets

- Square gauge block sets have several unique characteristics (Refer to page E-4 for details). A wide choice is provided to best match the target applications: sets containing from 2 to 112 blocks are available.
- It is recommended to use only Mitutoyo accessory sets with these gauge blocks as the tolerances on the assembly hole countersinks in the blocks and mating screw heads in the sets are 5 times tighter than the applicable standard, and therefore are guaranteed to fit together correctly.



Steel 112-block set



Steel 103-block set



Steel 76-block set



Steel 47-block set



Steel 32-block set

Wear block set



Tungsten Carbide

These square wear gauge blocks made of cemented carbide have excellent resistance to abrasion, making them ideal for protecting the ends of a stack of blocks subject to frequent use. Available in two nominal sizes: 1 mm and 2 mm. We recommend that these wear gauge blocks of both sizes be wrung firmly to the stack when in use.

Long block set



Steel 8-block set

Mitutoyo reserves the right to change any or all aspects of any product specification, including prices, designs and service content, without notice.

*1: Suffix No. (■) for Selecting Standard and Certificate Provided

ISO/DIN/JIS

Suffix No.	Inspection Certificate	Calibration Certificate JCSS
1	✔	
6	✔	✔

ASME

Suffix No.	Inspection Certificate	Calibration Certificate JCSS
1	✔	

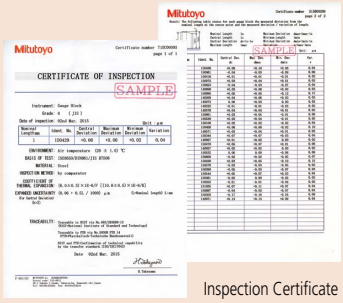

Inspection Certificate

SPECIFICATIONS

Metric Block Sets

Blocks per set	Order No. Steel	Order No. CERA	Standard/grade available and **Suffix No.***1 ISO/DIN/JIS	Standard/grade available and **Suffix No.***1 ASME	Blocks included in set Size (mm)	Step (mm)	Qty.
112	**516-437**	—	—	00: **-■6**	1.005		1
	516-438	—	0: **-■0**	0: **-■6**	1.001 - 1.009	0.001	9
	516-439	—	1: **-■0**	1: **-■6**	1.01 - 1.49	0.01	49
	516-440	—	2: **-■0**	2: **-■6**	0.5 - 24.5	0.5	49
	—	—	—	—	25 - 100	25	4
103	**516-441**	—	—	00: **-■6**	1.005		1
	516-442	—	0: **-■0**	0: **-■6**	1.01 - 1.49	0.01	49
	516-443	—	1: **-■0**	1: **-■6**	0.5 - 24.5	0.5	49
	516-444	—	2: **-■0**	2: **-■6**	25 - 100	25	4
76	**516-449**	—	—	00: **-■6**	1.005		1
	516-450	—	0: **-■0**	0: **-■6**	1.01 - 1.49	0.01	49
	516-451	—	1: **-■0**	1: **-■6**	0.5 - 9.5	0.5	19
	516-452	—	2: **-■0**	2: **-■6**	10 - 40	10	4
	—	—	—	—	50 - 100	25	3
47	**516-457**	—	—	00: **-■6**	1.005		1
	516-458	—	0: **-■0**	0: **-■6**	1.01 - 1.09	0.01	9
	516-459	—	1: **-■0**	1: **-■6**	1.1 - 1.9	0.1	9
	516-460	—	2: **-■0**	2: **-■6**	1 - 24	1	24
		—	—	—	25 - 100	25	4
32	**516-465**	—	—	00: **-■6**	1.005		1
	516-466	—	0: **-■0**	0: **-■6**	1.01 - 1.09	0.01	9
	516-467	—	1: **-■0**	1: **-■6**	1.1 - 1.9	0.1	9
	516-468	—	2: **-■0**	2: **-■6**	1 - 9	1	9
	—	—	—	—	10 - 30	10	3
	—				60		1

Metric Long Block Sets

Blocks per set	Order No. Steel	Order No. CERA	Standard/grade available and **Suffix No.***1 ISO/DIN/JIS	Standard/grade available and **Suffix No.***1 ASME	Blocks included in set Size (mm)	Step (mm)	Qty.
8	**516-751**	—	—	00: **-■6**	125, 150, 175	25	3
	516-752	—	0: **-■0**	0: **-■6**	200, 250	50	2
	516-753	—	1: **-■0**	1: **-■6**	300, 400, 500	100	3
	516-754	—	2: **-■0**	2: **-■6**			

Metric Wear Block Sets

Blocks per set	Order No. Steel	Order No. CERA	Standard/grade available and **Suffix No.***1 ISO/DIN/JIS	Standard/grade available and **Suffix No.***1 ASME	Blocks included in set Size (mm)	Step (mm)	Qty.
2	**516-820**	—	0: **-■0**	—	1	—	2
	516-821	—	1: **-■0**	—			
2	**516-822**	—	0: **-■0**	—	2	—	2
	516-823	—	1: **-■0**	—			

Inch Block Sets

Blocks per set	Order No. Steel	Order No. CERA	Standard/grade available and **Suffix No.***1 ISO/DIN/JIS	Standard/grade available and **Suffix No.***1 ASME	Blocks included in set Size (in)	Step (in)	Qty.
81	**516-401**	**516-201**	—	00: **-■6**	0.1001 - 0.1009	0.0001	9
	516-402	**516-202**	—	0: **-■6**	0.101 - 0.149	0.001	49
	516-403	**516-203**	—	1: **-■6**	0.05 - 0.95	0.05	19
	516-404	**516-204**	—	2: **-■6**	1 - 4	1	4
36	**516-421**	**516-221**	—	00: **-■6**	0.05		1
	516-422	**516-222**	—	0: **-■6**	0.1001 - 0.1009	0.0001	9
	516-423	**516-223**	—	1: **-■6**	0.101 - 0.109	0.001	9
	516-424	**516-224**	—	2: **-■6**	0.11 - 0.19	0.01	9
	—	—	—	—	0.1 - 0.5	0.1	5
	—	—	—	—	1, 2, 4	1	3
28	**516-417**	—	—	00: **-■6**	0.02005		1
	516-418	—	—	0: **-■6**	0.0201 - 0.0209	0.0001	9
	516-419	—	—	1: **-■6**	0.021 - 0.029	0.001	9
	516-420	—	—	2: **-■6**	0.010 - 0.090	0.01	9
	—		—	—			

Inch Long Block Sets

Blocks per set	Order No. Steel	Order No. CERA	Standard/grade available and **Suffix No.***1 ISO/DIN/JIS	Standard/grade available and **Suffix No.***1 ASME	Blocks included in set Size (in)	Step (in)	Qty.
8	**516-762**	—	—	0: **-■0**	5 - 7	1	3
	516-763	—	—	1: **-■0**	8, 10, 12	2	3
	—	—	—		16, 20	4	2

Inch Wear Block Sets

Blocks per set	Order No. Carbide	Order No. CERA	Standard/grade available and **Suffix No.***1 ISO/DIN/JIS	Standard/grade available and **Suffix No.***1 ASME	Blocks included in set Size (in)	Step (in)	Qty.
2	**516-824**	**516-846**	—	0: **-■0**	0.05	—	2
	516-825	**516-847**	—	1: **-■0**			
2	**516-826**	**516-844**	—	0: **-■0**	0.1	—	2
	516-827	**516-845**	—	1: **-■0**			

E

Individual Metric Square Gauge Blocks



SPECIFICATIONS

Metric Blocks

Length (mm)	Order No. Steel	CERA
0.5	614506	—
1	614611	—
1.0005	614520	—
1.001	614521	—
1.002	614522	—
1.003	614523	—
1.004	614524	—
1.005	614525	—
1.006	614526	—
1.007	614527	—
1.008	614528	—
1.009	614529	—
1.01	614561	—
1.02	614562	—
1.03	614563	—
1.04	614564	—
1.05	614565	—
1.06	614566	—
1.07	614567	—
1.08	614568	—
1.09	614569	—
1.1	614570	—
1.11	614571	—
1.12	614572	—
1.13	614573	—
1.14	614574	—
1.15	614575	—
1.16	614576	—
1.17	614577	—
1.18	614578	—
1.19	614579	—
1.2	614580	—
1.21	614581	—
1.22	614582	—
1.23	614583	—
1.24	614584	—
1.25	614585	—
1.26	614586	—
1.27	614587	—
1.28	614588	—
1.29	614589	—
1.3	614590	—
1.31	614591	—
1.32	614592	—

Length (mm)	Order No. Steel	CERA
1.33	614593	—
1.34	614594	—
1.35	614595	—
1.36	614596	—
1.37	614597	—
1.38	614598	—
1.39	614599	—
1.4	614600	—
1.41	614601	—
1.42	614602	—
1.43	614603	—
1.44	614604	—
1.45	614605	—
1.46	614606	—
1.47	614607	—
1.48	614608	—
1.49	614609	—
1.5	614641	—
1.6	614516	—
1.7	614517	—
1.8	614518	—
1.9	614519	—
2	614612	—
2.5	614642	—
3	614613	—
3.5	614643	—
4	614614	—
4.5	614644	—
5	614615	—
5.5	614645	—
6	614616	—
6.5	614646	—
7	614617	—
7.5	614647	—
8	614618	—
8.5	614648	—
9	614619	—
9.5	614649	—
10	614671	—
10.5	614650	—
11	614621	—
11.5	614651	—
12	614622	—
12.5	614652	—

Length (mm)	Order No. Steel	CERA
13	614623	—
13.5	614653	—
14	614624	—
14.5	614654	—
15	614625	—
15.5	614655	—
16	614626	—
16.5	614656	—
17	614627	—
17.5	614657	—
18	614628	—
18.5	614658	—
19	614629	—
19.5	614659	—
20	614672	—
20.5	614660	—
21	614631	—
21.5	614661	—
22	614632	—
22.5	614662	—
23	614633	—
23.5	614663	—
24	614634	—
24.5	614664	—
25	614635	—
30	614673	—
40	614674	—
50	614675	—
60	614676	—
75	614801	—
100	614681	—
125	614802	—
150	614803	—
175	614804	—
200	614682	—
250	614805	—
300	614683	—
400	614684	—
500	614685	—

Metric Wear Blocks

Length (mm)	Order No. Tungsten carbide
1	615611
2	615612

Note: Details of the overall sizes for forms of block are given on pages E-3 and E-24, and the accuracy standards to which they are manufactured are given on page E-5.

PROPRIETARY INSPECTION CERTIFICATE

Suffix No. (-■■■) for Selecting Standard and Certificate Provided

ISO/DIN/JIS

Suffix No.	Grade	Inspection Certificate	Calibration Certificate JCSS
-021	0	✔	
-026	0	✔	✔
-031	1	✔	
-036	1	✔	✔
-041	2	✔	
-046	2	✔	✔

ASME

Suffix No.	Grade	Inspection Certificate	Calibration Certificate JCSS
-521	00	✔	
-531	0	✔	
-541	1	✔	
-551	2	✔	

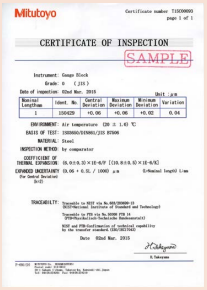
Mitutoyo
CERTIFICATE OF INSPECTION
SAMPLE

Inspection Certificate

Note:
- Please add the Suffix No. representing the national standard and grade required at the end of the Order No. when ordering these items.
- We make custom length gauge blocks.
- Accuracy when using with third-party accessories is not guaranteed.

Mitutoyo reserves the right to change any or all aspects of any product specification, including prices, designs and service content, without notice.

*1: Suffix No. (-■■■) for Selecting Grade and Certificate Provided

ASME

Suffix No.	Grade	Inspection Certificate	Calibration Certificate JCSS
-521	00	✔	
-531	0	✔	
-541	1	✔	
-551	2	✔	

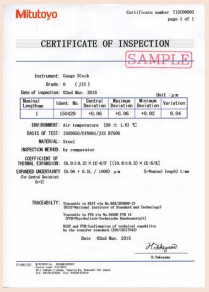

Inspection Certificate

Dimensions

Unit: mm

Nominal length: 0.5 mm to 4.5 mm (0.010 in to 0.19 in)

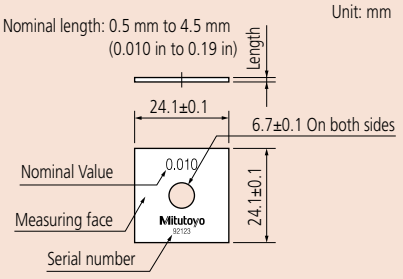

Nominal length: 5 mm to 14.5 mm (0.2 in to 0.450 in)

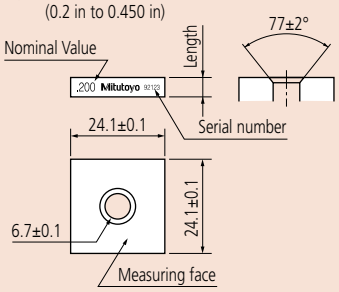

Nominal length: 15 mm to 500 mm (0.500 in to 20 in)

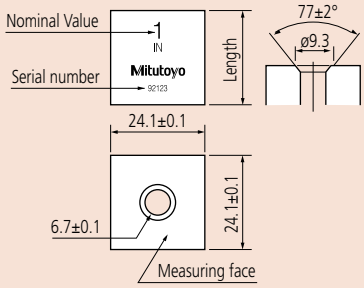

Individual Inch Square Gauge Blocks

SPECIFICATIONS

Inch Blocks

Length (in)	Order No.*1 Steel	Order No.*1 CERA
0.01	614310	—
0.02005	614240	—
0.0201	614231	—
0.0202	614232	—
0.0203	614233	—
0.0204	614234	—
0.0205	614235	—
0.0206	614236	—
0.0207	614237	—
0.0208	614238	—
0.0209	614239	—
0.02	614320	—
0.021	614321	—
0.022	614322	—
0.023	614323	—
0.024	614324	—
0.025	614325	—
0.026	614326	—
0.027	614327	—
0.028	614328	—
0.029	614329	—
0.03	614330	—
0.03125 (1/32)	614301	—
0.04	614340	—
0.046875 (3/64)	614302	—
0.05	614105	616105
0.06	614106	—
0.0625	614303	616303
0.07	614107	—
0.078125 (5/64)	614304	—
0.08	614108	—
0.09	614109	—
0.09375 (3/32)	614305	—
0.1	614191	616191
0.100025	614307	—
0.10005	614135	616135
0.100075	614308	—
0.1001	614121	616121
0.1002	614122	616122
0.1003	614123	616123
0.1004	614124	616124
0.1005	614125	616125
0.1006	614126	616126
0.1007	614127	616127
0.1008	614128	616128
0.1009	614129	616129
0.101	614141	616141
0.102	614142	616142
0.103	614143	616143
0.104	614144	616144
0.105	614145	616145

Length (in)	Order No.*1 Steel	Order No.*1 CERA
0.106	614146	616146
0.107	614147	616147
0.108	614148	616148
0.109	614149	616149
0.109375 (7/64)	614306	—
0.11	614150	616150
0.111	614151	616151
0.112	614152	616152
0.113	614153	616153
0.114	614154	616154
0.115	614155	616155
0.116	614156	616156
0.117	614157	616157
0.118	614158	616158
0.119	614159	616159
0.12	614160	616160
0.121	614161	616161
0.122	614162	616162
0.123	614163	616163
0.124	614164	616164
0.125	614165	616165
0.126	614166	616166
0.127	614167	616167
0.128	614168	616168
0.129	614169	616169
0.13	614170	616170
0.131	614171	616171
0.132	614172	616172
0.133	614173	616173
0.134	614174	616174
0.135	614175	616175
0.136	614176	616176
0.137	614177	616177
0.138	614178	616178
0.139	614179	616179
0.14	614180	616180
0.141	614181	616181
0.142	614182	616182
0.143	614183	616183
0.144	614184	616184
0.145	614185	616185
0.146	614186	616186
0.147	614187	616187
0.148	614188	616188
0.149	614189	616189
0.15	614115	616115
0.16	614116	616116
0.17	614117	616117
0.18	614118	616118
0.19	614119	616119
0.2	614192	616192

Length (in)	Order No.*1 Steel	Order No.*1 CERA
0.25	614212	616212
0.3	614193	616193
0.35	614213	616213
0.375 (3/8)	614309	—
0.4	614194	616194
0.45	614214	616214
0.5	614195	616195
0.55	614215	616215
0.6	614196	616196
0.65	614216	616216
0.7	614197	616197
0.75	614217	616217
0.8	614198	616198
0.85	614218	616218
0.9	614199	616199
0.95	614219	616219
1	614201	616201
2	614202	616202
3	614203	616203
4	614204	616204
5	614205	—
6	614206	—
7	614207	—
8	614208	—
10	614222	—
12	614223	—
16	614224	—
20	614225	—

Inch Wear Blocks

Length (in)	Order No. Tungsten carbide
0.05	615105
0.1	615191

Note: Details of the overall sizes for forms of block are given on page E-3 and the accuracy standards to which they are manufactured are given on page E-5.

Mitutoyo reserves the right to change any or all aspects of any product specification, including prices, designs and service content, without notice.

Square Gauge Block Accessories Set SERIES 516

- To expand the application of square gauge blocks, Mitutoyo offers the Gauge Block Accessories Set.



516-611

SPECIFICATIONS

Metric

Order No. 516-611	Included in set	Quantity Supplied
619070	Half-round jaw 2 mm	2 pcs.
619071	Half-round jaw 5 mm	
619072	Plain jaw 10 mm	
619073	Center point 2 mm	1 pc.
619054	Scriber point	
619074	Base 10 mm	
619056	Stud	2 pcs.
619057	Flat head screw 1 1/4 in	
619058	Flat head screw 5/8 in	
619059	Slotted head nut	
619060	Adjustable tie rod 6 in	
619061	Adjustable tie rod 4 1/2 in	
619062	Tie rod 3 in	1 pc.
619063	Tie rod 2 1/4 in	
619064	Tie rod 1 1/2 in	
619065	Tie rod 3/4 in	
619066	Knurled head screw	2 pcs.

Inch

Order No. 516-612	Included in set	Quantity Supplied
619050	Half-round jaw 0.125 in	2 pcs.
619051	Half-round jaw 0.25 in	
619052	Plain jaw 0.5 in	
619053	Center point 0.1 in	1 pc.
619054	Scriber point	
619055	Base 0.5 in	
619056	Stud	2 pcs.
619057	Flat head screw 1 1/4 in	
619058	Flat head screw 5/8 in	
619059	Slotted head nut	
619060	Adjustable tie rod 6 in	
619061	Adjustable tie rod 4 1/2 in	
619062	Tie rod 3 in	1 pc.
619063	Tie rod 2 1/4 in	
619064	Tie rod 1 1/2 in	
619065	Tie rod 3/4 in	
619066	Knurled head screw	2 pcs.

Note: 2 pcs. of half-round jaw, plain jaw, stud, flat head screw, slotted head nut, adjustable tie rod, and knurled head screw are included in each set. Please note that the abovementioned Order No. indicates only 1 set.

Square gauge block applications

Example of a gage for checking caliper accuracy

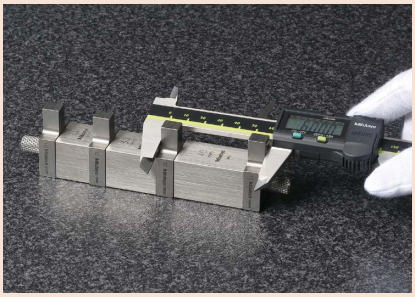

Using plain jaws, gauge blocks, a tie rod and a knurled-head screw a gage was constructed to enable rapid checking of the accuracy of a caliper at selected points.

Example of a gage for comparison measurement of a stepped workpiece

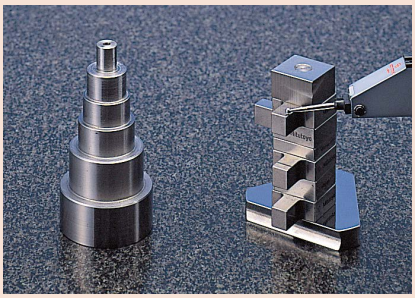

Using plain jaws, gauge blocks, a tie rod and a knurled-head screw a gage was constructed to enable rapid comparison measurement of a stepped workpiece. (Sample workpiece)

Note: Accuracy when using third-party accessories is not guaranteed.

Mitutoyo reserves the right to change any or all aspects of any product specification, including prices, designs and service content, without notice.

Half-round jaw

Unit: mm

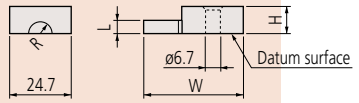

Order No.	R (mm)	L (mm)	W (mm)	H (mm)
619070	1.95	2	33.6	5.3
619071	4.95	5	39.9	10.3

- Flatness 0.5 µm
- Parallelism of L 0.5 µm
- Tolerance of L ±0.5 µm

Plain jaw 619072

Unit: mm

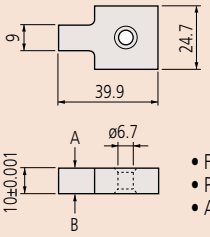

- Flatness 0.12 µm
- Parallelism 0.12 µm
- A and B are datum surfaces

Center point 619073

Unit: mm

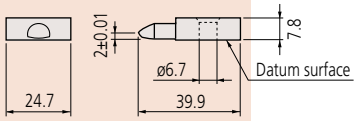

- Flatness 0.5 µm

Scriber point 619054

Unit: mm

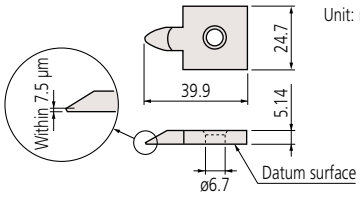

- Flatness of datum surface 0.5 µm

Base 619074

Unit: mm

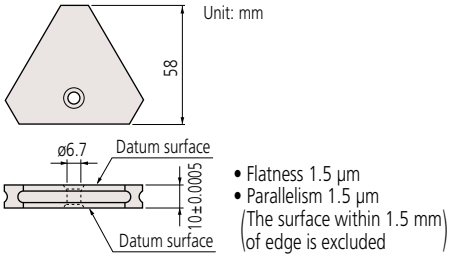

- Flatness 1.5 µm
- Parallelism 1.5 µm
  (The surface within 1.5 mm of edge is excluded)

Flat head screw

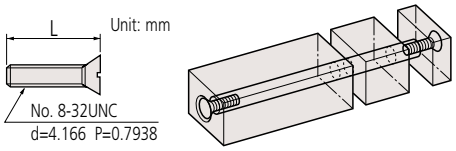

Order No.	L (mm)
619057	31.6
619058	15.8

Stud 619056

Unit: mm

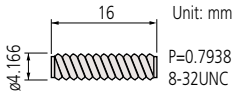

Slotted head nut

619059
Unit: mm

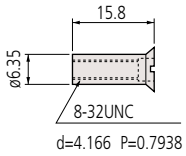

Knurled head screw

619066
Unit: mm

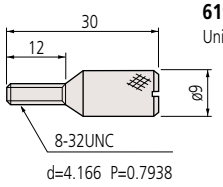

- **Contraction caused by the clamping force**

The minimum recommended torque to be applied to the clamping screws is approximately 600 mN·m. The chart below shows the approximate length contraction of a 100 mm gage stack using typical torque values.

Driver	Contraction
Torque Driver 600 mN·m	0.2 µm/100 mm
Ordinary Driver 700 to 800 mN·m	0.3 µm/100 mm

Adjustable tie rod

Unit: mm

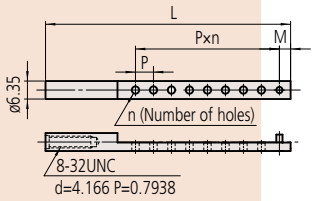

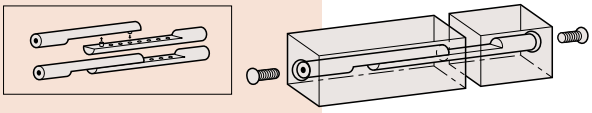

Order No.	L (mm)	M (mm)	P (mm)	n (Number of holes)
619060	124.5	3.85	6.35	14
619061	86.5	3.95	6.35	8

Tie rod

Unit: mm

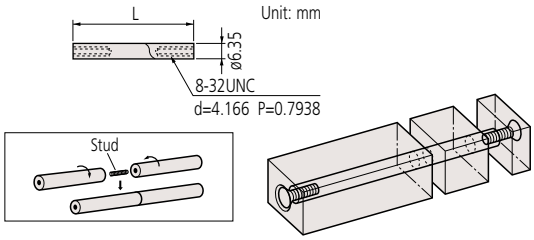

Order No.	L (mm)
619065	19
619064	38
619063	57
619062	76

Accessories used for combining square gauge blocks

Overall length (mm)		Min.	21	36	34	41	45	58	64	72	77	82	91	95	109	117	130	148	121	167	143	160	205	180	223	240	258	295	375
Order No.	Included in set	Max.	30	43	43	50	60	72	79	88	91	97	107	109	125	135	150	169	180	184	210	255	270	285	288	345	363	445	520
619059	Slotted head nut		1	1		1																							
619058	Flat head screw		1		2	1	2	1	2		1	2		1		1			2			2							
619057				1				1		2	1		2	1	2	1	2	2		2	2		2	2	2	2	2	2	2	2
619056	Stud					1										1	1	1		1			1		1	1	1	1	2
619065	Tie rod				1	1										1	1												
619064							1	1		1								1												
619063									1		1		1							1			1				1			
619062												1		1	1	1	1	1		1					1		1		1
619061	Adjustable tie rod																		2		2		2		2			2	2
619060																						2		2		2	2	2	2

E

Mitutoyo reserves the right to change any or all aspects of any product specification, including prices, designs and service content, without notice.

Step Master
SERIES 516

- Step master is a master gage used for the z-axis (vertical direction) calibration of optical instruments.
- Each step is defined as the difference in height between the centers of adjacent blocks, measured to a resolution of 0.01 µm by using an interferometer with an accuracy tolerance of ±0.20 µm.
- Steel and ceramic types are available to suit the application.
- Height differences are measured between the centers of adjacent steps.

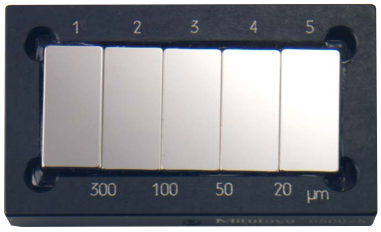

Steel type
516-199



Ceramic type
516-499

SPECIFICATIONS

Steel type

Order No.	516-198					516-199				
Block No.	1	2	3	4	5	1	2	3	4	5
Cumulative step (µm)	0	10	15	17	18	0	300	400	450	470
Step value between adjacent blocks (µm)		10	5	2	1		300	100	50	20

Ceramic type

Order No.	516-498					516-499				
Block No.	1	2	3	4	5	1	2	3	4	5
Cumulative step (µm)	0	10	15	17	18	0	300	400	450	470
Step value between adjacent blocks (µm)		10	5	2	1		300	100	50	20

Note: ○○○ - ○○○ **-24**: Provided with Calibration Certificate

DIMENSIONS

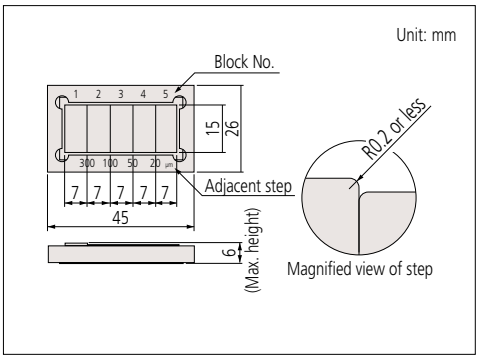



Mitutoyo reserves the right to change any or all aspects of any product specification, including prices, designs and service content, without notice.

Custom-made Blocks & Gages

- Mitutoyo can make Gauge Blocks and reference gages to your size and design, including precision spacers and stepped masters, which normally absorb much time and effort to make in-house. Special processing including boring, step gaging and special marking is available. Consult us for details.
- Nominal size range
  - · 0.1 mm to 1000 mm (steel)
  - · 0.5 mm to 500 mm (ceramic)
  - · 30 mm to 1000 mm (ZERO CERA Blocks)
- Nominal size increment
  - · 0.0005 mm (up to 100 mm)
  - · 0.001 mm (over 100 mm)
- Cross section (same as the standard product)
  - · Nominal length of 10 mm or less: 30×9 mm
  - · Nominal length of more than 10 mm: 35×9 mm
  - · Square types are also available.

Notes on "coupling holes" on custom gauge blocks:
- · Steel, from 100 mm to less than 500 mm
  Without coupling holes
  (If needed, please notify.)
- · Steel, from 500 mm to less than 1000 mm
  With coupling holes
  (If not needed, please notify.)
- · Ceramic, from 100 mm to less than 500 mm
  With coupling holes
  (If not needed, please notify.)

Typical applications of custom-made gauge blocks and reference gages.
Please enquire for price and delivery times for your particular requirements.

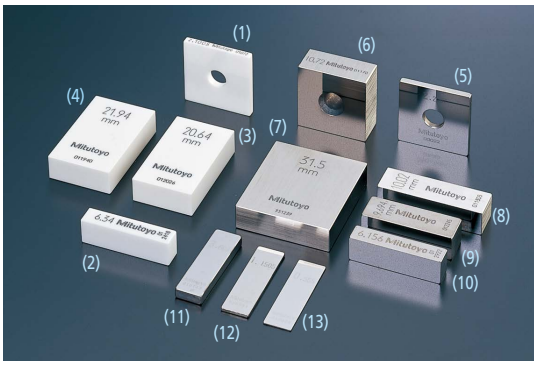

Ceramic
(1) Square gauge block (2.1005 mm)
(2) Rectangular gauge block (6.34 mm)
(3) Rectangular gauge block (20.64 mm)
(4) Rectangular gauge block (21.94 mm)

Steel
(5) Square gauge block (2.2065 mm)
(6) Square gauge block (10.72 mm)
(7) Rectangular gauge block (31.5 mm)
(8) Rectangular gauge block (10.02 mm)
(9) Rectangular gauge block (9.694 mm)
(10) Rectangular gauge block (6.156 mm)
(11) Rectangular gauge block (3.603 mm)
(12) Rectangular gauge block (1.1505 mm)
(13) Rectangular gauge block (0.555 mm)

Special gauge blocks (T: nominal), **CERA stepped master block**

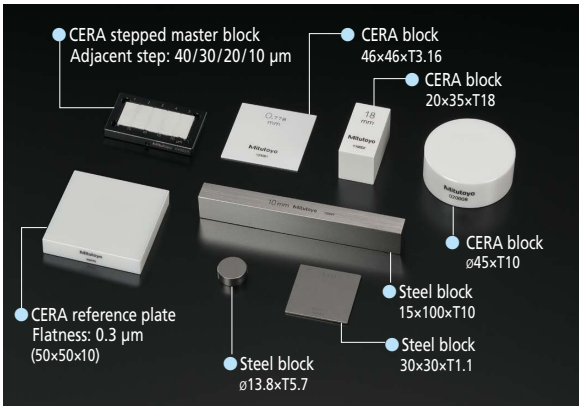

Unit: mm

E

Maintenance Kit for Gauge Blocks SERIES 516

- Maintenance kit for gauge blocks includes all the necessary maintenance tools for removing burrs and contamination, and applying anti-corrosion treatment after use.



516-650E

Order No. 516-650E
Tools and accessories included:

(1) Ceraston (**601645**)
(both sides finished by lapping)
(100×25×12 mm)

(2) Optical flat (**158-117**)
(ø45, 12 mm thickness, Flatness 0.2 µm)
Used to check the wringing of thin gauge blocks and for the presence of burrs.

(3) Tweezers (**600004**)
Used for handling thin gauge blocks.

(4) Blower brush (**600005**)
Used for blowing dust from measuring surfaces.

(5) Cleaning paper (**600006**)
(lens paper, 82×304 mm, 500 pcs.)
Used for wiping off rust preventive oil and contamination. Lint free.

(6) Artificial leather mat (B4 size, Artificial buckskin) (**600007**)
Used as a gauge block mat in order to avoid scratches on the work table.

(7) Reagent bottle (**600008**)
(polyethylene container, 100 ml)
Bottle of wiping solution.
(Mitutoyo employs n-Heptane for solvent.)

(8) Gloves (**600009**)
Used for handling large gauge blocks. Effective for the prevention of corrosion and thermal expansion.



Recommendation for Regular Calibration

As is widely known, gauge blocks are end measures based on distance measurements traceable to the wavelength of the iodine stabilized He-Ne laser. Because they serve as the standard based on which measurement devices are adjusted, even the smallest of errors can be critical; nevertheless, users often neglect to periodically calibrate them because they are so rarely used. Please calibrate your gauge blocks as described in the table below (best practices may vary according to frequency of use and grade).

Application	Cycle (years)	Grade
Reference standard	1 to 2	K
Calibration	2	K or 0
Inspection	2	0 or 1
Shop floor	0.5 to 1	1 or 2

As an accredited calibration laboratory, Mitutoyo offers a traceable calibration service for customers' gauge blocks. Our regular calibration service features:

- Gauge blocks manufactured by any maker can be calibrated.
- Cleansing and removal of burrs.
- Central dimension and dimensional deviations of each block are measured.
- Calibration results are provided for immediate use and for building a calibration history of each block.

For detailed information, contact the nearest Mitutoyo sales office.

Mitutoyo reserves the right to change any or all aspects of any product specification, including prices, designs and service content, without notice.



Typical application

Ceraston
SERIES 516 — Accessory for Gauge Block Maintenance

- Alumina-ceramic abrasive stone for removing burrs from hard materials such as ceramics that ordinary stones cannot handle.
- Can be used both for steel gauge blocks and CERA blocks.
- Excellent in the ease of removing burrs and durability compared with Arkansas stones.
- Both sides can be used.



601644
150 (W) ×50 (D) ×20 (H) mm



601645
100 (W) ×25 (D) ×12 (H) mm

Removing burrs

Figure 1

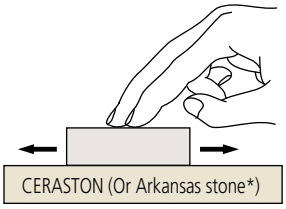

Figure 2

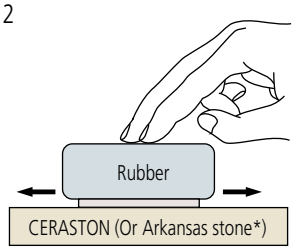

(1) Wipe any dust and oil films from the gauge block and the Ceraston (or Arkansas stone*) using a solvent.
(2) Place the gauge block on the Ceraston (or Arkansas stone*) so that the measuring face that has burrs is on the abrasive surface of the stone. While applying light pressure, move the gauge block to and fro about ten times (Fig. 1). Use a block rubber for thin gauge blocks to apply even pressure (Fig. 2).
(3) Check the measuring face for burrs with an optical flat. If the burrs have not been removed, repeat step (2). If burrs are too large, they may not be removed with an abrasive stone. If so, discard the gauge block.

* Mitutoyo does not offer Arkansas stones.

E

Mitutoyo reserves the right to change any or all aspects of any product specification, including prices, designs and service content, without notice.

Gauge Block Comparator GBCD-100A
SERIES 565 — Automatic Comparator with Dual Gage Heads

- Measures the length of rectangular gauge blocks in the size range 0.5 mm to 100 mm. It automatically compares a test block with an appropriate Reference gage block.
- The compensation result is not affected by any warping of thinner gauge blocks due to the use of upper and lower gage heads (dual-head system).
- Measurement configuration: 1 cycle of automatic comparison measurement with a Reference gage block.



- Gauge block set for comparator calibration (optional)
  Standard type **516-145-E2**



Special bridge-type block

516-145-E2

SPECIFICATIONS

Metric

Range	Resolution	Accuracy in narrow range (20 °C)	Upper gaging head		
			Type	Measuring force	Contact point
0.5 mm - 100 mm	0.01 µm	±(0.03 + 0.3L/1000) µm* L=Gauge block length (mm)	Mu-Checker	1 N	Carbide contact point of radius 20 mm

Lower gaging head			Operating conditions
Type	Measuring force	Contact point	
Mu-Checker	0.6 N	Carbide contact point of radius 5 mm	20 °C±1 °C Humidity: 58% RH ±15% RH (Under less temperature change, and hot or cold direct air flow should be avoided.)

* Uncertainty of measurement at the 95% confidence level (not including the calibration error of the Reference gage block).

E

Mitutoyo reserves the right to change any or all aspects of any product specification, including prices, designs and service content, without notice.

Gauge Block Comparator GBCD-250
SERIES 565 — Manual Comparator with Dual Gage Heads

- Measures Rectangular Gauge Blocks and Square Gauge Blocks (latter requires dedicated holder - optional accessory) by manual comparison with an appropriate Reference gage block in the size range 0.1 mm to 250 mm.
- Measuring method: Differential measurement between upper and lower gage heads (dual head system)



SPECIFICATIONS

Metric

Range	Resolution (Effective indication)	Accuracy [Comparison measurement of the same nominal length]	Accuracy [Dimensional deviations between Reference gage block and measurement gauge block: ±3 mm]
0.1 - 250 mm	0.001 µm (0.01 µm)	±(0.03 + 0.3L/1000) µm* L=Gauge block length (mm)	±(0.06 + 0.3L/1000) µm* L=Gauge block length (mm)

Upper gaging head			Lower gaging head			Operating conditions
Type	Measuring force	Contact point	Type	Measuring force	Contact point	
Linear Gage	0.4 N	Carbide contact point of radius 20 mm	Linear Gage	0.2 N	Carbide contact point of radius 5 mm	20 °C±1 °C Humidity: 30% RH to 60% RH (Under less temperature change, and hot or cold direct air flow should be avoided.)

* Uncertainty of measurement at the 95% confidence level (not including the calibration error of the Reference gage block).

E

Definition of the Meter

The 17th General Conference of Weights and Measures in 1983 decided on a new definition of the meter unit as the length of the path traveled by light in a vacuum during a time interval of 1/299792458 of a second. The gauge block is the practical realization of this unit and as such is used widely throughout industry.

Selection, Preparation and Assembly of a Gauge Block Stack

Select gauge blocks to be combined to make up the size required for the stack.

(1) Take the following things into account when selecting gauge blocks.
- a. Use the minimum number of blocks whenever possible.
- b. Select thick gauge blocks whenever possible.
- c. Select the size from the one that has the least significant digit required, and then work back through the more significant digits.

(2) Clean the gauge blocks with an appropriate cleaning agent.

(3) Check the measuring faces for burrs by using an optical flat as follows:

Figure 1 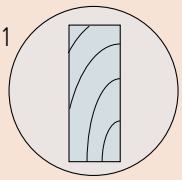

Figure 2 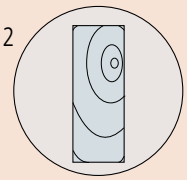

- a. Wipe each measuring face clean.
- b. Gently place the optical flat on the gauge block measuring face.
- c. Lightly slide the optical flat until interference fringes appear.
  Judgment 1: If no interference fringes appear, it is assumed that there is a large burr or contaminant on the measuring face.
- d. Lightly press the optical flat to check that the interference fringes disappear.
  Judgment 2: If the interference fringes disappear, no burr exists on the measuring face.
  Judgment 3: If some interference fringes remain locally while the flat is gently moved to and fro, a burr exists on the measuring face. If the fringes move along with the optical flat, there is a burr on the optical flat.
- e. To remove burrs, follow the directions on page E-30.

(4) Apply a very small amount of oil to the measuring face and spread it evenly across the face. (Wipe the face until the oil film is almost removed.) Grease, spindle oil, vaseline, etc., are commonly used.

Thermal Stabilization Time

The following figure shows the degree of dimensional change when handling a 100 mm steel gauge block with bare hands.

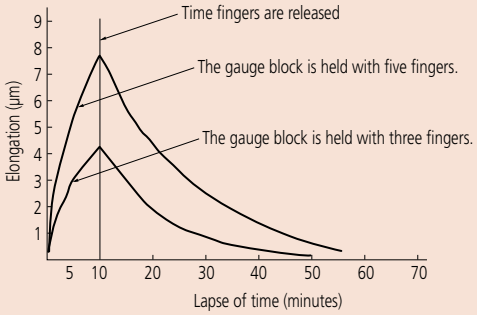

(5) Gently overlay the faces of the gauge blocks to be wrung together. There are three methods to use (a, b and c as shown below) according to the size of blocks being wrung:

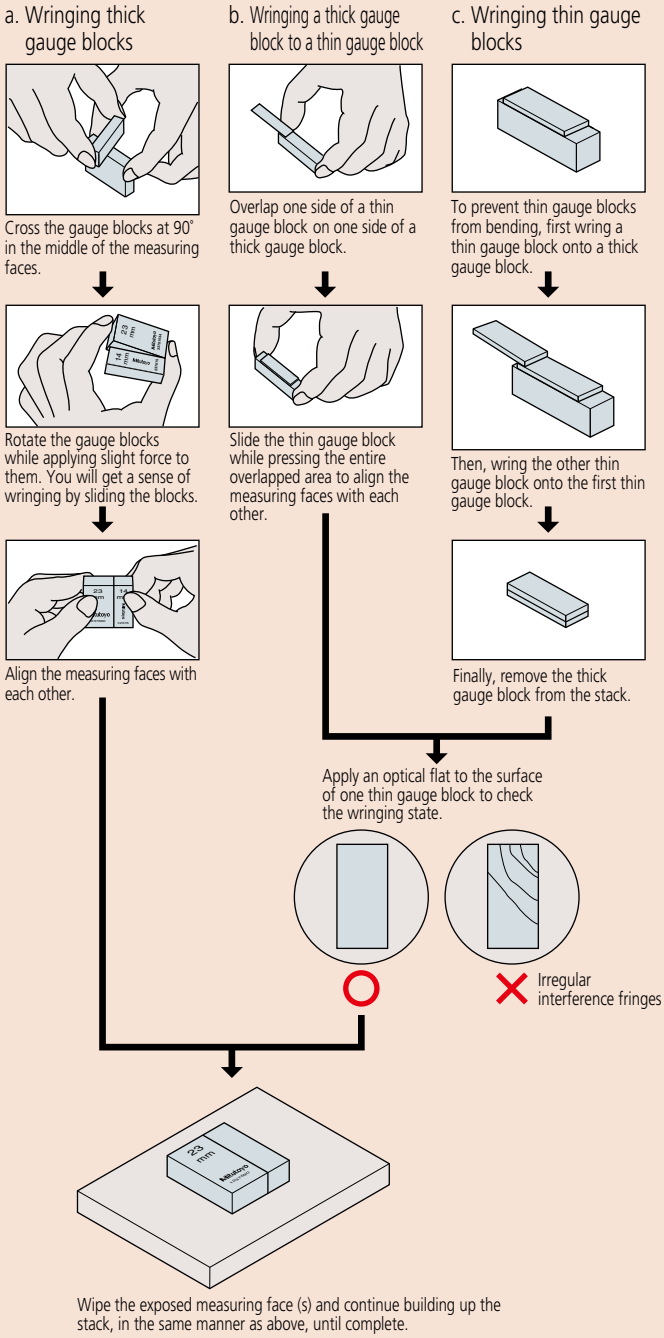

Height Master SERIES 515

- Height Master is a best-selling product with a name that has become the industry standard for height reference instruments.



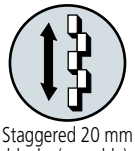

Staggered 20 mm blocks (movable)

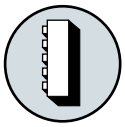

Vertical orientation



Riser block

515-322

SPECIFICATIONS

Metric

Order No.	515-322
Range (H)	5 < H ≤ 310 mm
Graduation (analog scale)	0.001 mm
Block step	20 mm (staggered)
Micrometer adjustment	20 mm
Micrometer feed	0.5 mm/rev
Block pitch accuracy	±1.5 µm
Parallelism of blocks	1.0 µm
Feed error	±1.0 µm
Retrace error	1.0 µm
Mass	23 kg

Note 1: The block accuracy and the parallelism of blocks are relative to the main unit installation surface.
Note 2: Supplied with a wooden storage case as standard.

Inch

Order No.	515-310	515-311
Range (H)	0.2 in < H ≤ 12.2 in	0.2 in < H ≤ 12.2 in
Graduation (analog scale)	0.00001 in	
Block step	0.5 in (straight)	1 in (staggered)
Micrometer adjustment	1 in	
Micrometer feed	0.025 in/rev	
Block pitch accuracy	±50 µin	
Parallelism of blocks	40 µin	
Feed error	±40 µin	
Retrace error	40 µin	
Mass	23 kg	

Note 1: The block accuracy and the parallelism of blocks are relative to the main unit installation surface.
Note 2: Supplied with a wooden storage case as standard.

Typical application



Reading

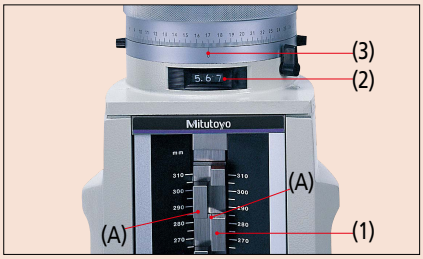

(A) Height A

(1) Scale	280.	mm
(2) Counter	5.67	mm
(3) Thimble	0.000	mm
	285.670	mm

MeasurLink® ENABLED
Data Management Software by Mitutoyo

Digital Height Master SERIES 515



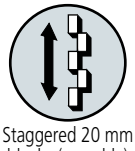

Staggered 20 mm blocks (movable)

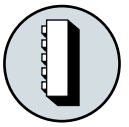

Vertical orientation



Riser block

515-374

- Best-selling height reference standard.
- Equipped with a data output port that enables incorporation into measurement networking and statistical process control systems. (Refer to Page A-3 for details)



SPECIFICATIONS

Metric

Order No.	515-374	515-376	515-378
Range (H)	10 < H ≤ 310 mm	10 < H ≤ 460 mm	10 < H ≤ 610 mm
Resolution (digital display)	0.001 mm		
Block step	20 mm (staggered)		
Micrometer adjustment	20 mm		
Micrometer feed	0.5 mm/rev		
Block pitch accuracy 0 < H ≤ 310 mm	±1.5 µm		
Block pitch accuracy 310 < H ≤ 460 mm	—	±2.5 µm	
Block pitch accuracy 460 < H ≤ 610 mm	—	—	±3.5 µm
Parallelism of blocks 0 < H ≤ 310 mm	2.0 µm		
Parallelism of blocks 310 < H ≤ 610 mm	—	2.5 µm	
Feed error	±2.0 µm		±2.5 µm
Retrace error	2.0 µm		2.5 µm
Mass	9.5 kg	13.6 kg	16 kg

Note: The block accuracy and the parallelism of blocks are based on main unit installation surface, which does not include the retrace error.

Inch

Order No.	515-375	515-377	515-379
Range (H)	0.5 in < H ≤ 12 in	0.5 in < H ≤ 18 in	0.5 in < H ≤ 24 in
Resolution (digital display)	0.0001 in		
Block step	1 in (staggered)		
Micrometer adjustment	1 in		
Micrometer feed	0.025 in/rev		
Block pitch accuracy 0 < H ≤ 12 in	±100 µin		
Block pitch accuracy 12 in < H ≤ 18 in	—	±100 µin	
Block pitch accuracy 18 in < H ≤ 24 in	—	—	±150 µin
Parallelism of blocks 0<H≤12 in	50 µin		
Parallelism of blocks 12 in < H ≤ 18 in	—	100 µin	
Feed error	±100 µin		±100 µin
Retrace error	100 µin		100 µin
Mass	9.5 kg	13.6 kg	16 kg

Note: The block accuracy and the parallelism of blocks are based on main unit installation surface, which does not include the retrace error.

Technical Data

- Display: LCD 6 digits
- Battery: SR44 (2 pcs.)
- Battery life: Approx. 1.8 years under normal use

Function

Zero setting, Origin-setting, Origin restoration, Data hold, Auto power off, Data output

Optional Accessories

515-111: Auxiliary block kit for bore gage (mm)
515-120: Auxiliary block kit for bore gage (inch)
———: Riser block (see page E-36.)
959149: SPC cable (1 m)
959150: SPC cable (2 m)

Mitutoyo reserves the right to change any or all aspects of any product specification, including prices, designs and service content, without notice.

Height Master
SERIES 515 — Optional accessories

Typical application

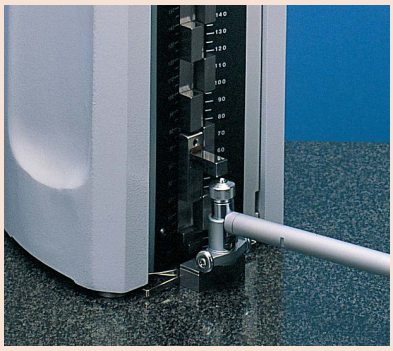

Bore gage zero-setting

Riser Blocks
SERIES 515

- These riser blocks are designed to increase the measurable height.
- They can also be used on Square Master models **311-215** and **311-225**. (Refer to Page E-42 for details)

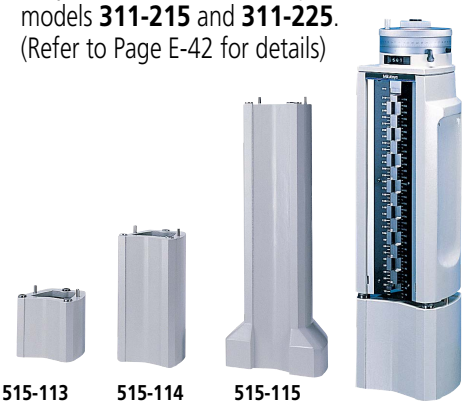

515-113 515-114 515-115

SPECIFICATIONS

Metric

Order No.	Height (mm)	Accuracy (µm)	Variation in length (µm)	Mass (kg)
515-113	150	±0.6	0.6	5.7
515-114	300	±1.0	0.8	9.8
515-115	600	±2.0	1.0	26.8

Inch

Order No.	Height (in)	Accuracy (µin)	Variation in length (µin)	Mass (kg)
515-116	6	±20	20	4.8
515-117	12	±40	30	11.3
515-118	24	±80	40	31

Auxiliary Block Kit
SERIES 515 – for Bore Gage

- Enables efficient zero point adjustment of cylinder gages using the Height Master.
- Zero point adjustment range: 18 to 150 mm.

515-112



SPECIFICATIONS

Metric

Order No.	Model
515-110	Universal Height Master
515-111	Digital Height Master (**515-374 / 376 / 378**)
515-112	Height Master (**515-322**)

Inch

Order No.	Model
515-119	Universal Height Master, Height Master (**515-310**)
515-120	Digital Height Master (**515-375 / 377 / 379**)
515-121	Height Master (**515-311**)

E

Mitutoyo reserves the right to change any or all aspects of any product specification, including prices, designs and service content, without notice.

Universal Height Master
SERIES 515 — Usable in Vertical and Horizontal Orientations

- The Universal Height Master is designed for both vertical and horizontal orientation, providing a wide range of applications such as accuracy checking of machine tool table movements.



515-520

- Analog display by the built-in counter – the appearance and specifications are the same as model **515-322**.
(Refer to Page E-35 for details)

SPECIFICATIONS

Metric

Order No.		515-520	515-523
Range (H)		5 < H ≤ 610 mm	5 < H ≤ 1010 mm
Graduation (analog scale)		0.001 mm	
Block step		10 mm (straight)	
Micrometer adjustment		20 mm	
Micrometer feed		0.5 mm/rev	
Block pitch accuracy	H ≤ 310 mm	±1.5 µm	
	310 < H ≤ 610 mm	±2.5 µm	
	610 < H ≤ 1010 mm	—	±3.5 µm
Parallelism of blocks	H ≤ 610 mm	1.5 µm	
	610 < H ≤ 1010 mm	—	2.0 µm
Feed error		±1.2 µm	±1.5 µm
Retrace error		1.2 µm	1.5 µm
Mass		42 kg	63.5 kg

Note 1: The block accuracy and the parallelism of blocks are relative to the main unit installation surface.
Note 2: Supplied with a wooden storage case as standard.

Inch

Order No.		515-512	515-510	515-513
Range (H)		0.2 in < H ≤ 18.2 in	0.2 in < H ≤ 24.2 in	0.2 in < H ≤ 40.2 in
Graduation (analog scale)		0.00001 in		
Block step		0.5 in (straight)		
Micrometer adjustment		1 in		
Micrometer feed		0.025 in/rev		
Block pitch accuracy	H ≤ 12 in	±50 µin		
	12 in < H ≤ 24 in	—	±100 µin	
	24 in < H ≤ 40 in	—	—	±150 µin
Parallelism of blocks	H ≤ 24 in	60 µin		
	24 in < H ≤ 40 in	—	80 µin	
Feed error		±40 µin		±60 µin
Retrace error		40 µin		60 µin
Mass		42 kg		63.5 kg

Note 1: The block accuracy and the parallelism of blocks are relative to the main unit installation surface.
Note 2: Supplied with a wooden storage case as standard.

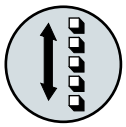

Single-row 10 mm blocks (movable)

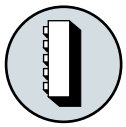

Vertical orientation

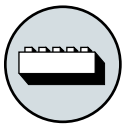

Horizontal orientation



Riser block

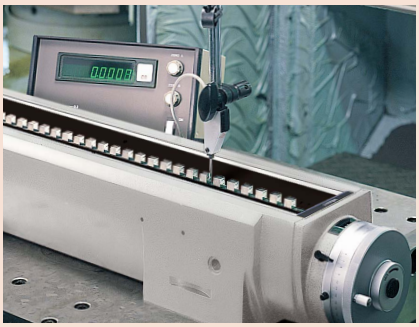

Typical application using in horizontal orientation

Optional Accessories

Supporting base
900574 (Dedicated for the Universal Height Master. Provided for **515-523** and **515-513** as standard.)
- Stable vertical orientation is available.

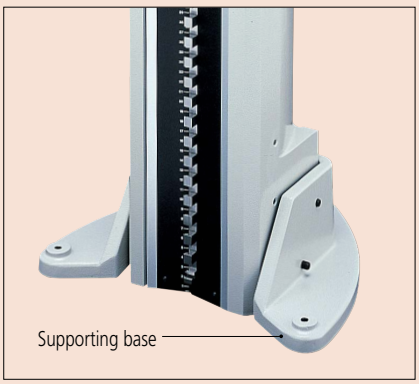

Mitutoyo reserves the right to change any or all aspects of any product specification, including prices, designs and service content, without notice.

Check Master
SERIES 515

- Designed to check the accuracy of table movements of machine tools and calibrate CMMs.
- Can be used in either vertical or horizontal orientation.



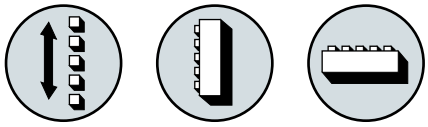

SPECIFICATIONS

Metric

Order No.		515-720	515-721	515-722	515-723	515-724
Range (H)		310 mm	450 mm	610 mm	1010 mm	1510 mm
Block step		10 mm				
Block pitch accuracy	H ≤ 310 mm	±2.5 µm				
	310 < H ≤ 610 mm	—	±3.5 µm			
	610 < H ≤ 1010 mm	—	—	—	±5.0 µm	
	1010 < H ≤ 1510 mm	—	—	—	—	±8.0 µm
Parallelism of blocks	H ≤ 310 mm	1.2 µm				
	310 < H ≤ 610 mm	—	1.5 µm			
	610 < H ≤ 1010 mm	—	—	—	2.0 µm	
	1010 < H ≤ 1510 mm	—	—	—	—	2.5 µm
Mass		7 kg	10 kg	13 kg	22 kg	30 kg

Note 1: The block accuracy and the parallelism of blocks are relative to the main unit installation surface.
Note 2: Supplied with a wooden storage case as standard.
Note 3: High-accuracy type is available by special order.

Inch

Order No.		515-710	515-711	515-712	515-713
Range (H)		12.5 in	18.5 in	24.5 in	40.5 in
Block step		0.5 in			
Block pitch accuracy	H ≤ 12.5 in	±100 µin			
	12.5 in < H ≤ 24.5 in	—	±150 µin		
	24.5 in < H ≤ 40.5 in	—	—	—	±200 µin
Parallelism of blocks	H ≤ 12.5 in	50 µin			
	12.5 in < H ≤ 24.5 in	—	60 µin		
	24.5 in < H ≤ 40.5 in	—	—	—	80 µin
Mass		7 kg	10 kg	13 kg	22 kg

Note 1: The block accuracy and the parallelism of blocks are relative to the main unit installation surface.
Note 2: Supplied with a wooden storage case as standard.
Note 3: High-accuracy type is available by special order.

Mitutoyo reserves the right to change any or all aspects of any product specification, including prices, designs and service content, without notice.

Standard Scales
SERIES 182 — Made of Low Expansion Glass

- Standard scales can be used as a traceable standard of length for calibrating measuring instruments.
- These scales are manufactured using Mitutoyo's high-definition lithography technology in an underground scale manufacturing facility dedicated to the production of high-accuracy, high-quality line standards. They are considered top-grade length standards.



182-501-50
182-501-60

182-502-50
182-502-60

Technical Data

- Material: Low expansion glass
- Thermal expansion coefficient: (0.00±0.02)×10^{-6}/K
- Graduation line thickness: 4 µm
- Graduation: 1 mm
- Accuracy (at 20 °C): (0.5 + L/1000) µm,
  L=Measured length (mm)

SPECIFICATIONS

Metric

Order No.	Range (mm)	Length (mm)	Width (mm)	Thickness (mm)
182-501-50	250	280	20	10
182-501-60*				
182-502-50	500	530	30	20
182-502-60*				

* With English JCSS certificate.

DIMENSIONS

Unit: mm

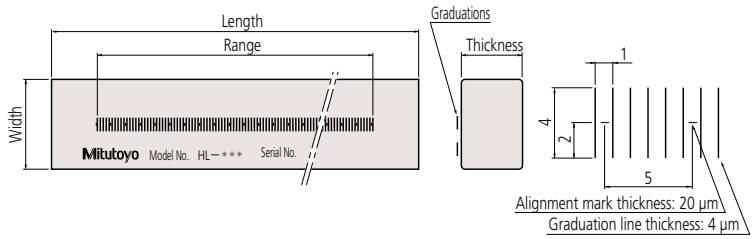

Mitutoyo reserves the right to change any or all aspects of any product specification, including prices, designs and service content, without notice.

Technical Data

- Glass material: Soda-lime glass
- Thermal expansion coefficient: 8.5×10^{-6}/K
- Accuracy (at 20 °C): (1.5 + 2L/1000) µm,
  L=Measured length (mm)

Working Standard Scales SERIES 182

- These standard scales can be used to calibrate various measuring instruments and to confirm traceability to upper-level calibration devices and reference instruments. For example, they can be used in daily and periodic inspections of profile projector/microscope stages and of optical length measurement systems.
- These scales are manufactured using high-accuracy lithographic technologies. Mitutoyo has developed these technologies at the dedicated underground facility which was custom-built to produce highly accurate scales. Various sizes are available for each type to suit the application.

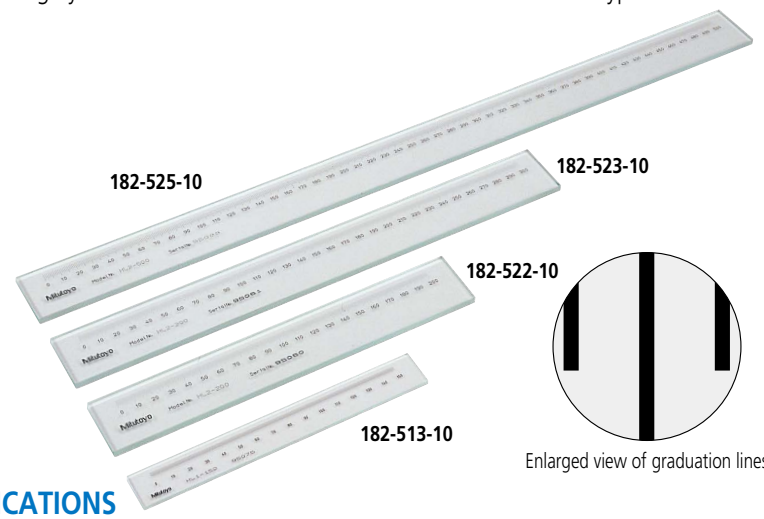

Enlarged view of graduation lines

SPECIFICATIONS

Metric

Order No.	Range (mm)	Graduation (mm)	Length (mm)	Inspection pitch (mm)	Graduation line thickness (µm)	Mass (kg)
182-511-10	50	0.1	75	5	20	0.23
182-512-10	100		125	10		0.24
182-513-10	150		175			0.25
182-514-10	200		225			0.26
182-521-10	100	0.5	130	20	50	0.27
182-522-10	200		230			0.32
182-523-10	300		330			0.57
182-524-10	400		430			0.71
182-525-10	500		530			0.86
182-531-10	250	1	280	25	100	0.55
182-532-10	500		530			1.22
182-533-10	750		780			0.23
182-534-10	1000		1030			1.54

Note: An inspection certificate produced by a standard scale automatic calibration system is supplied as standard.

DIMENSIONS

Unit: mm

- **0.1 mm graduation**

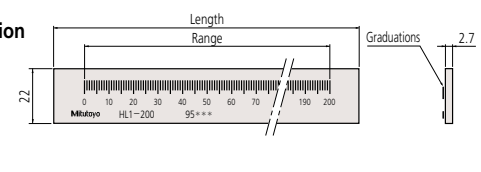

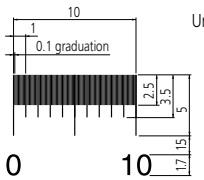

- **0.5 mm graduation**

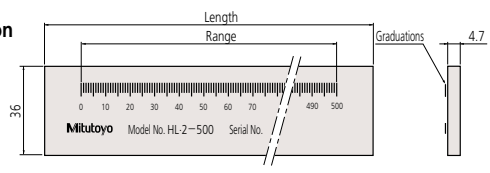

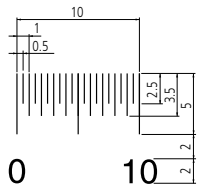

- **1 mm graduation**

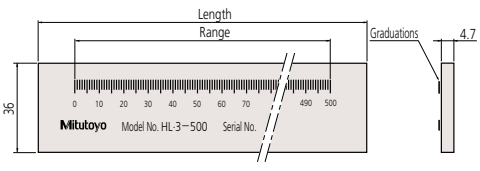

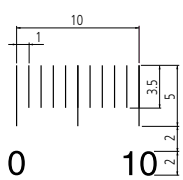

Mitutoyo reserves the right to change any or all aspects of any product specification, including prices, designs and service content, without notice.

High Precision Square SERIES 311

- The High Precision Square is a gage used for inspecting the travel straightness and axial perpendicularity of moving elements on equipment such as machine tools, CMMs, form measuring machines and semiconductor-related equipment.
- All four surfaces, finished using ultra-precision technology built on our experience in gauge blocks and other products, can be used as reference surfaces.
- Better than 1 µm/300 mm straightness and perpendicularity of each (four) reference surface. In addition, front and back faces are accurate to better than 5 µm/300 mm.
- Three nominal sizes are available (90×110, 160×210 and 260×310 mm) so that you can select the size that best suits the application.



311-111



311-112



311-113

SPECIFICATIONS

Metric

Order No.	Dimension (W×L×T) (mm)	Mass (kg)
311-111	90×110×25	1.5
311-112	160×210×25	5.0
311-113*	260×310×30	14.0

* Supplied with a removable handle.

Technical Data

- Reference surface
  Perpendicularity tolerance: 1 µm
  Straightness tolerance: 1 µm
- Front/back faces
  Perpendicularity tolerance: 5 µm
  Straightness tolerance: 5 µm
- Dedicated wooden case is provided.

Mitutoyo reserves the right to change any or all aspects of any product specification, including prices, designs and service content, without notice.

Typical application

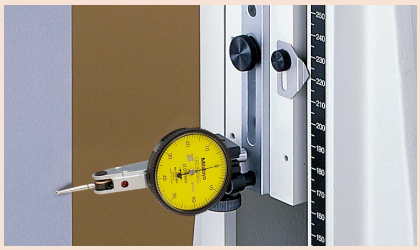

Mounting the Indicator Holder

Example 1

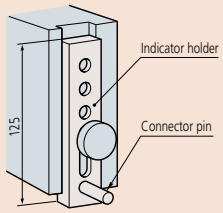

Example 2

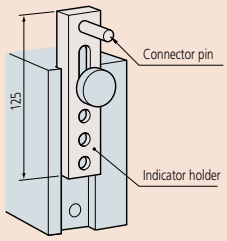

Standard Accessories

- **513-401-10H** (Metric)
- **902053**: Clamp
- **601471**: Indicator holder
- **538616**: Hexagonal-head wrench (3 mm)

Note: Inspection certificate is not attached. Contact your local Mitutoyo sales office.

Optional Accessories

- **900565**: Feeler
- **900571**: Adjustable holder
- **900551**: Extension holder

Square Master
SERIES 311 — Squareness/Straightness Measuring

- Squareness (perpendicularity) and straightness measurements can be performed accurately and efficiently by just moving a lever. Use the vertical motion handle on the rear of the main unit for operation.
- Highly accurate measurement of squareness and straightness is available by calibrating a square as a master using the built-in perpendicularity adjustment mechanism. Prepare a square to be used for accuracy check/adjustment separately.
- Sliding force: Approx. 2 to 5 N



311-215



311-225



311-245

SPECIFICATIONS

Metric

Order No.	Vertical travel (mm)	Squareness (µm)	Straightness (µm)	Dimension (mm)			Mass (kg)
				Width	Depth	Height	
311-215*	150	3	2	180	200	420	13.7
311-225*	250	6	2.5	180	200	520	16.2
311-245	450	9	3.5	220	220	720	24

* Riser blocks to extend the height of Square Masters can be used. (Refer to Page E-36 for details)

Optional accessories

900565: Feeler

For probing surfaces that the contact point of a detector cannot reach.

Unit: mm

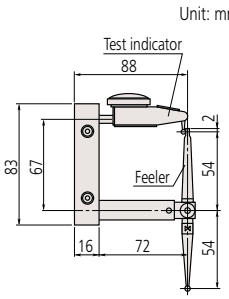



900571: Adjustable holder

Enables easy adjustment of indicator position.

Unit: mm

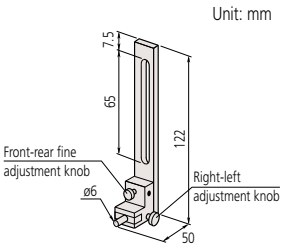



Unit: mm

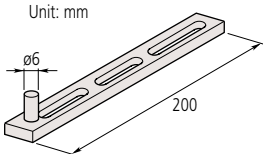

900551: Extension holder

Measurement position can be extended by using this 200 mm length holder instead of the indicator holder.

Mitutoyo reserves the right to change any or all aspects of any product specification, including prices, designs and service content, without notice.

Steel Rules
SERIES 182

- Clear graduations on satin-chrome finish.
- Stainless tempered.


182-101


182-102


182-103


182-105


182-201


182-202


182-205


182-302

SPECIFICATIONS

Metric Wide Rigid Rules

Order No.	Graduations (mm)	Range (mm)	Width (mm)
182-111	1, 0.5 (on both faces)	150	19
182-131		300	25
182-151		450	30
182-171		600	30

Metric Fully-Flexible Rules

Order No.	Graduations (mm)	Range (mm)	Width (mm)
182-211	1, 0.5 (on both faces)	150	12
182-231		300	12
182-251		450	19
182-271		600	19

Inch/Metric Semi-Flexible Rules

Order No.	Graduations*	Range	Width (in)
182-302	1/16 in, 1/32 in, 1/64 in, 1 mm, 0.5 mm	6 in/150 mm	0.51
182-303		8 in/200 mm	0.51
182-305		12 in/300 mm	0.59
182-307		20 in/500 mm	0.59
182-309		40 in/1000 mm	0.59

* Engraved on the front side only.

Inch/Metric Wide Rigid Rules

Order No.	Graduations	Range	Width (in)
182-105	1/32 in, 1/64 in, 1 mm, 0.5 mm	6 in/150 mm	0.75
182-125		12 in/300 mm	0.98
182-145		18 in/450 mm	1.18
182-165		24 in/600 mm	1.18
182-106	1/50 in, 1/100 in, 1 mm, 0.5 mm	6 in/150 mm	0.75
182-126		12 in/300 mm	0.98
182-107	1/10 in, 1/100 in, 1 mm, 0.5 mm	6 in/150 mm	0.75
182-108	1/10 in, 1/50 in, 1 mm, 0.5 mm	6 in/150 mm	0.75

Inch/Metric Fully-Flexible Rules

Order No.	Graduations	Range	Width (in)
182-205	1/32 in, 1/64 in, 1 mm, 0.5 mm	6 in/150 mm	0.47
182-225		12 in/300 mm	0.47
182-245		18 in/450 mm	0.75
182-265		24 in/600 mm	0.75
182-206	1/50 in, 1/100 in, 1 mm, 0.5 mm	6 in/150 mm	0.47
182-226		12 in/300 mm	0.47
182-207	1/10 in, 1/100 in, 1 mm, 0.5 mm	6 in/150 mm	0.47
182-208	1/10 in, 1/50 in, 1 mm, 0.5 mm	6 in/150 mm	0.47

Inch Wide Rigid Rules

Order No.	Graduations (in)	Range (in)	Width (in)
182-101	1/8, 1/16, 1/32, 1/64	6	0.75
182-121		12	0.98
182-141		18	0.71
182-161		24	1.18
182-102	1/50, 1/100, 1/32, 1/64	6	0.75
182-122		12	0.98
182-142		18	1.18
182-162		24	1.18
182-103	1/10, 1/100, 1/32, 1/64	6	0.75
182-123		12	0.98
182-143		18	1.18
182-163		24	1.18
182-104	1/10, 1/50, 1/32, 1/64	6	0.75
182-124		12	0.98

Inch Fully-Flexible Rules

Order No.	Graduations (in)	Range (in)	Width (in)
182-201	1/8, 1/16, 1/32, 1/64	6	0.47
182-221		12	0.47
182-241		18	1.18
182-261		24	0.75
182-202	1/50, 1/100, 1/32, 1/64	6	0.47
182-222		12	0.47
182-242		18	0.75
182-262		24	0.75
182-203	1/10, 1/100, 1/32, 1/64	6	0.47
182-223		12	0.47
182-243		18	0.75
182-263		24	0.75
182-204	1/10, 1/50, 1/32, 1/64	6	0.47
182-224		12	0.47

Mitutoyo reserves the right to change any or all aspects of any product specification, including prices, designs and service content, without notice.

Thickness Gages
SERIES 184

- Metric thickness gages are available with tapered leaves.
- Each leaf is marked with its thickness.
- Each leaf is detachable if necessary.

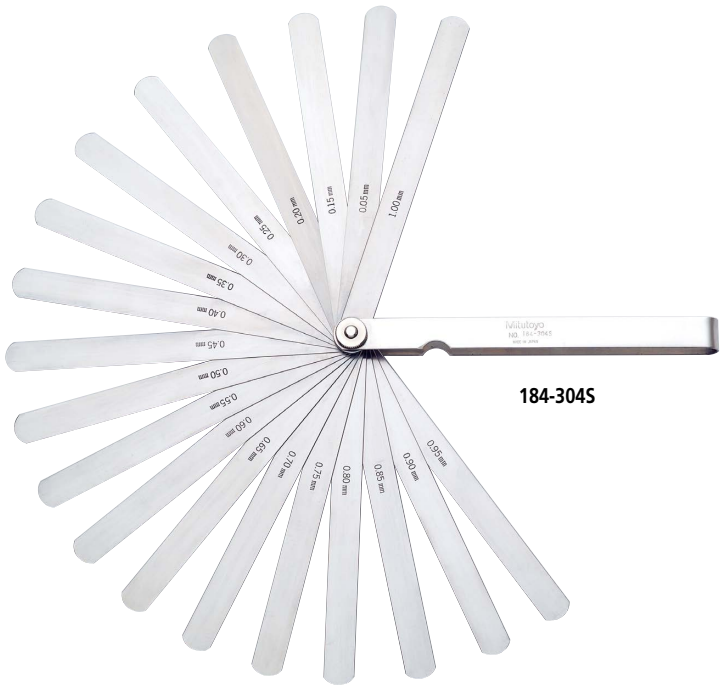

184-304S

SPECIFICATIONS

Metric

Order No.	Range (mm)	Composition of leaves	Remarks
184-313S	0.05 - 1	28 leaves: 0.05 - 0.15 mm by 0.01 mm, 0.2 - 1 mm by 0.05 mm	—
184-303S		28 leaves: 0.05 - 0.15 mm by 0.01 mm, 0.2 - 1 mm by 0.05 mm	Long leaf
184-304S	0.05 - 1	20 leaves: 0.05 - 1 mm by 0.05 mm	Long leaf
184-305S	0.05 - 1	13 leaves: 0.05 - 0.3 mm by 0.05 mm, 0.4 - 1 mm by 0.1 mm	—
184-301S		13 leaves: 0.05 - 0.3 mm by 0.05 mm, 0.4 - 1 mm by 0.1 mm	Long leaf
184-306S	0.05 - 0.8	10 leaves: 0.05 - 0.2 mm by 0.05 mm, 0.3 - 0.8 mm by 0.1 mm	—
184-308S		10 leaves: 0.05 - 0.2 mm by 0.05 mm, 0.3 - 0.8 mm by 0.1 mm	Long leaf
184-307S	0.03 - 0.5	13 leaves: 0.03 - 0.1 mm by 0.01 mm, 0.2 - 0.5 mm by 0.1 mm, 0.15 mm	—
184-302S		13 leaves: 0.03 - 0.1 mm by 0.01 mm, 0.2 - 0.5 mm by 0.1 mm, 0.15 mm	Long leaf

DIMENSIONS

Unit: mm

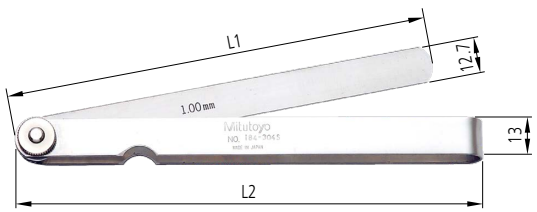

Order No.	L1	L2
184-313S	100	106
184-303S	150	156
184-304S	150	156
184-305S	100	106
184-301S	150	156
184-306S	100	106
184-308S	150	156
184-307S	100	106
184-302S	150	156

E

Mitutoyo reserves the right to change any or all aspects of any product specification, including prices, designs and service content, without notice.

Radius Gages SERIES 186

- Radius size is stamped on each gage leaf.
- Each leaf comprises an internal and an external radius gage of the same size.
- With locking clamp.



186-105

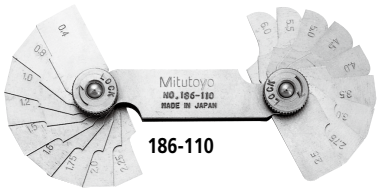

186-110

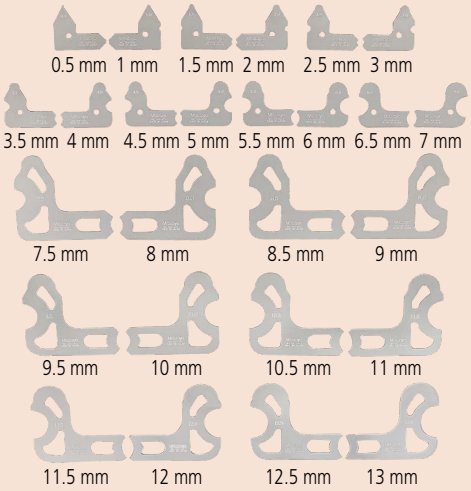

Composition of leaves for **186-902**

SPECIFICATIONS

Metric

Order No.	Range (mm)	Accuracy	Composition of leaves	Remarks
186-110	0.4 - 6	±0.04 mm	18 leaves: 0.4, 0.8, 1, 1.2, 1.5, 1.6 mm, 1.75 - 3 mm by 0.25 mm, 3.5 - 6 mm by 0.5 mm	90° arc
186-902	0.5 - 13		26 leaves: 0.5 - 13 mm by 0.5 mm	90° arc, separate part type
186-105	1 - 7		34 leaves: 1 - 3 mm by 0.25 mm, 3.5 - 7 mm by 0.5 mm	180° arc
186-106	7.5 - 15		32 leaves: 7.5 - 15 mm by 0.5 mm	180° arc
186-107	15.5 - 25		30 leaves: 15.5 - 20 mm by 0.5 mm, 21 - 25 mm by 1 mm	180° arc

Inch

Order No.	Range (in)	Accuracy	Composition of leaves	Remarks
186-103	1/32 - 17/64	±0.002 in	16 leaves: 1/32 in - 17/64 in by 64ths	90° arc
186-101	1/32 - 1/4		30 leaves: 1/32 in - 1/4 in by 64ths	180° arc
186-102	17/64 - 1/2		32 leaves: 17/64 in - 1/2 in by 64ths	180° arc
186-104	9/32 - 33/64		16 leaves: 9/32 in - 33/64 in by 64ths	90° arc
186-901*	1/64 - 1/2		25 leaves: 1/64 in - 17/64 in by 64ths, 9/32 in - 1/2 in by 32nds	—

* Each gage has five measuring locations.

Thread Pitch Gages SERIES 188

- Thread pitch is stamped on each gage.
- Metric, Unified, and Whitworth screw pitch gages.

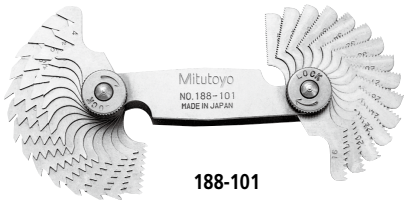

188-101

SPECIFICATIONS

Metric Screw Pitch Gages

Order No.	Range (mm)	Integration pitch error	Composition of leaves
188-130	0.35 - 6	±0.05 mm	22 leaves: 0.35, 0.4, 0.45, 0.5, 0.6, 0.7, 0.75, 0.8, 1, 1.25, 1.5, 1.75, 2, 2.5, 3, 3.5, 4, 4.5, 5, 5.5, 6 mm and 60° angle gage
188-122	0.4 - 7		21 leaves: 0.4, 0.5, 0.7, 0.75, 0.8, 0.9, 1, 1.25, 1.5, 1.75, 2, 2.5, 3, 3.5, 4, 4.5, 5, 5.5, 6, 6.5, 7 mm
188-121	0.4 - 7		18 leaves: 0.4, 0.5, 0.75, 1, 1.25, 1.5, 1.75, 2, 2.5, 3, 3.5, 4, 4.5, 5, 5.5, 6, 6.5, 7 mm

Unified Screw Pitch Gages

Order No.	Range	Integration pitch error	Composition of leaves
188-111	4 - 42 TPI	±0.002 in	30 leaves: 4, $4^{1/2}$, 5, $5^{1/2}$, 6, 7, 8, 9, 10, 11, $11^{1/2}$, 12, 13, 14, 15, 16, 18, 20, 22, 24, 26, 27, 28, 30, 32, 34, 36, 38, 40, 42 TPI

Note: Metric and Unified Pitch Gage Set (**188-151**) is available.

Metric and Unified Screw Pitch Gage Set

Order No.	Range	Integration pitch error	Composition of leaves
188-151	0.4 - 7 mm/4 - 42 TPI	±0.05 mm/ ±0.002 in	51 leaves: Set of **188-122** and **188-111**

Whitworth Screw Pitch Gages

Order No.	Range	Integration pitch error	Composition of leaves
188-101	4 - 42 TPI	±0.002 in	30 leaves: 4, $4^{1/2}$, 5, $5^{1/2}$, 6, 7, 8, 9, 10, 11, $11^{1/2}$, 12, 13, 14, 15, 16, 18, 20, 22, 24, 26, 27, 28, 30, 32, 34, 36, 38, 40, 42 TPI
188-102	4 - 60 TPI		28 leaves: 4, $4^{1/2}$, 5, 6, 7, 8, 9, 10, 11, 12, 13, 14, 16, 18, 19, 20, 22, 24, 25, 26, 28, 30, 32, 34, 36, 40, 48, 60 TPI

Mitutoyo reserves the right to change any or all aspects of any product specification, including prices, designs and service content, without notice.

Technical Data
- Battery: Lithium Battery
- Battery life: 2,000 hours

Function
- Presetting

Digimatic Universal Protractor SERIES 187

- Data output function makes it easy to gather statistical data.
- Can be attached to height gages using a gage holder (**950750**, metric)
- Setting preset value.
- Removable blade.



187-501

SPECIFICATIONS

Order No.	Blade length	Range	Resolution	Accuracy	Repeatability	Remarks (standard accessory)
187-501	150 mm	-360° to +360°	1' (0.01°)	±2' (±0.03°)	1'	Height gage holder (**950750**)
187-502	300 mm					Height gage holder (**950750**)
187-551	6 in					Height gage holder (**950749**)
187-552	12 in					Height gage holder (**950749**)

Universal Bevel Protractor SERIES 187



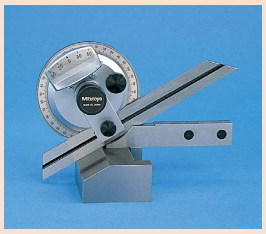

- High-precision instrument for accurate angle measurement on machines, molds, and jigs.
- Graduation: 5'

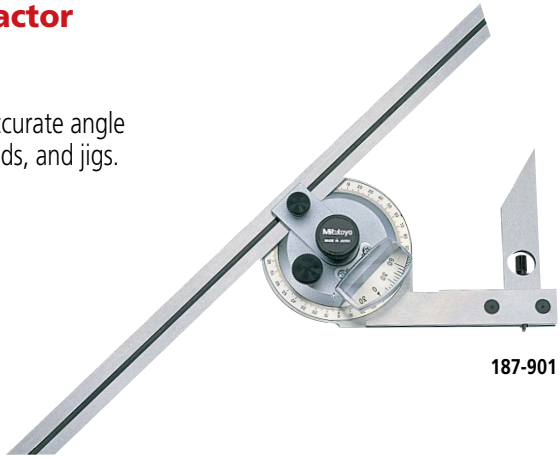

187-901

SPECIFICATIONS

Metric

Order No.	Blade length (mm)	Remarks
187-901	150, 300	w/60°, 45°, 30° edges
187-907	150	w/60°, 45° edges
187-908	300	w/60°, 45° edges

Inch

Order No.	Blade length (in)	Remarks
187-902	6, 12	w/60°, 45°, 30° edges
187-904	6	w/60°, 45° edges
187-906	12	w/60°, 45° edges

Bevel Protractor SERIES 187

- Consists of three sheets of stainless steel, the middle one of which is made for angle measurements.

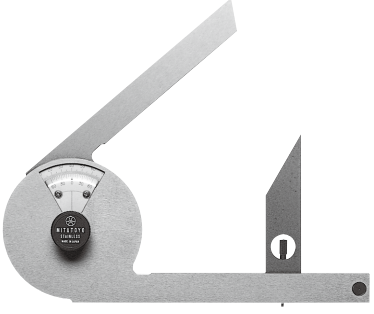

187-201

SPECIFICATIONS

Order No.	Blade length (mm)	Range	Graduation	Blade edge angle	Mass (g)	Remarks
187-201	137	90°×4 (360°)	5' (0° to 90° to 0°)	30° and 60°	260	w/60°, 30° edges

Mitutoyo reserves the right to change any or all aspects of any product specification, including prices, designs and service content, without notice.

Black Granite Surface Plates SERIES 517

- Natural granite is free from deterioration or dimensional change over time.
- Black Granite Plate's most distinctive feature is its hardness, twice that of cast iron.
- Free from wringing effects, so there is no interruption of work.
- Since granite is harder, finer grained, and more brittle than cast iron it does not throw up burrs or protrusions if scratched. (See Figure 1.) This ensures a high degree of flatness with no risk of damaging instruments or workpieces.
- Use these plates in a stable temperature environment. Since flatness error occurs when there is a temperature difference between the working surface and the underside, avoid working in direct sunlight. Also, do not place a plate in the vicinity of an air conditioner or heater. (Recommended environment: Temperature 20±1 °C, Humidity 58±2%)

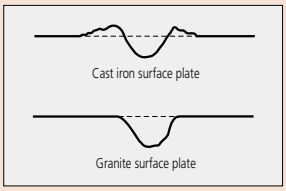

Figure 1



1000×750 mm



600×600 mm

Machining of optional through holes, screw bushings, etc.

Through holes and screw holes (bushings) can be machined to order on surface plates.
For detailed information, contact the nearest Mitutoyo sales office.

Mitutoyo reserves the right to change any or all aspects of any product specification, including prices, designs and service content, without notice.

SPECIFICATIONS

Order No.	Size (mm)			Flatness (μm)	Mass (kg)	Optional stands for black granite surface plates			h (mm)
	W×D×H	d	w			Standard type	with safety frame	with casters (with safety frame)	
517-401-4	300×300×100	240	240	2	27	—	—	—	—
517-301				3					
517-101				5					
517-411-4	450×300×100	240	390	2	40	—	—	—	—
517-311				3					
517-111				6					
517-414-4	600×450×100	370	500	2.5	80	**517-203-2**	**517-203R**	**517-203CR**	755 to 775
517-314				4					
517-114				8					
517-403-4	600×600×130	500	500	2.5	140	**517-204-2**	**517-204R**	**517-204CR**	755 to 775
517-303				5					
517-103				8					
517-405-4	750×500×130	420	630	3	146	**517-205-2**	**517-205R**	**517-205CR**	755 to 775
517-305				5					
517-105				9					
517-407-4	1000×750×150	630	700	3	337	**517-206-2**	**517-206R**	**517-206CR**	755 to 775
517-307				6					
517-107				12					
517-409-4	1000×1000×150	700	700	3.5	450	**517-207-2**	**517-207R**	**517-207CR**	735 to 775
517-309				7					
517-109				13					
517-413-4	1500×1000×200	700	1100	4	900	**517-208-4**	**517-208R**	**517-208CR**	735 to 775
517-313-4				8					
517-113-4				16					
517-410-4	2000×1000×250	700	1500	4.5	1500	**517-209-4**	**517-209R**	**517-209CR**	735 to 775
517-310-4				9.5					
517-110-4				19					
517-416-4	2000×1500×300	1100	1500	5	2700	**517-210-4**	**517-210R**	**517-210CR**	735 to 775
517-316-4				10					
517-116-4				20					
*1	2000×2000×350	1500	1500	11	4200	—	—	—	700 to 706*2
*1				22					
*1	3000×1500×400	1100	2000	12.5	5400	—	—	—	700 to 706*2
*1				25					
*1	3000×2000×500	1500	2000	13.5	9000	—	—	—	700 to 706*2
*1				27					

*1 2000×2000 or larger is available by special order. Consult your local Mitutoyo sales office.
*2 Distance from the bottom of the large granite plate block mount to the granite plate top surface.

DIMENSIONS

Unit: mm

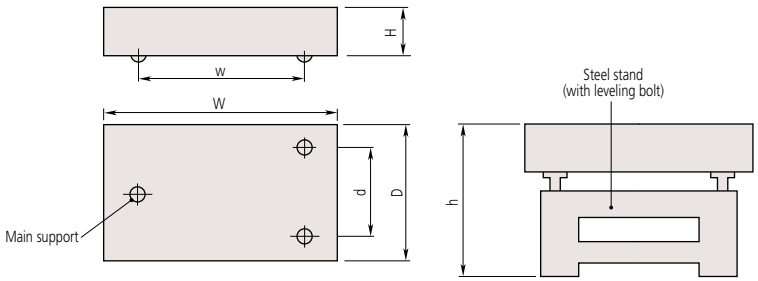

SPECIFICATIONS: Main and auxiliary supports for large surface plates

Order No.	Applicable surface plates Size (W×D×H) (mm)
06AAY174	2000×2000×350
06AAY175	3000×1500×400
06AAY176	3000×2000×500

E



ABSOLUTE Digimatic Indicator ID-CNX

Refer to page F-5 for details.



Dial Test Indicator

Refer to page F-67 for details.



Inspection Instruments for Indicators (i-Checker)

Refer to page F-77 for details.

F

Small Tool Instruments
Digimatic Indicators
Dial Indicators /
Dial Test Indicators

MeasurLink® ENABLED
Data Management Software by Mitutoyo

Measurement Data Network System

MeasurLink® is a measurement data management system based on databases (SQL Server). You can build a network to manage the measurement results and measuring machines by simply combining the functions necessary for your purpose.

MeasurLink® is a registered trademark of Mitutoyo Corporation in Japan and Mitutoyo America Corporation in the United States.



IP Codes

These are codes that indicate the degree of protection provided (by an enclosure) for the electrical function of a product against the ingress of foreign bodies, dust and water as defined in IEC standards (IEC 60529: 2001) and JIS C 0920: 2003.
(Refer to page IX)



TÜV Rheinland Certification Marks

All products with the marks have passed the IP test carried out by the German accreditation organization, TÜV Rheinland.



Measuring Instruments Shipped with Inspection Certificate

Mitutoyo guarantees product quality as a leading precision measuring instrument manufacturer and ships measuring instruments with an inspection certificate that includes inspection data so that customers can use them with confidence.

ABSOLUTE™

ABSOLUTE Linear Encoder

Mitutoyo developed the unique absolute method to retain position information after the power is turned off.
The origin is set once - thereafter the live position is displayed when the power is turned on.

INDEX

Digimatic Indicators

ABSOLUTE, Economical, **ID-SX2**	F-3
ABSOLUTE, Standard, **ID-CNX**	F-5
ABSOLUTE, IP66 Water-proof, **ID-N / B**	F-8
ABSOLUTE, Peak-Value Hold, **ID-C**	F-10
ABSOLUTE, for Bore Gage, **ID-C**	F-12
ABSOLUTE, Calculation, **ID-C**	F-14
ABSOLUTE, Signal Output Function, **ID-C**	F-17
ABSOLUTE, Slim, Economical, **ID-U**	F-19
High Accuracy, High Functionality, **ID-H**	F-21
ABSOLUTE, Back-lit Screen, **ID-F**	F-23
Origin setting of Digimatic Indicators	F-25
EC Counter	F-25

Dial Indicators

Dial Indicator Features	F-26
Standard, 0.01 mm Graduation	F-28
Standard, 0.001 & 0.005 mm Graduation	F-30
Water-proof, 0.01 mm & 0.001 mm Graduation	F-32
Standard, Inch Reading	F-34
Standard, One Revolution	F-36
Standard, One Revolution, Water-proof	F-38
Standard, One Revolution, Lightweight	F-40
Long Stroke	F-42
Compact, Extra Small Diameter	F-44
Compact, Small Diameter	F-46
Compact, One Revolution	F-48
Long Stroke, Large Diameter	F-50
ANSI/AGD, Metric	F-52
Special Feature Models	F-53
Back Plunger	F-55
Contact Points	F-57
Interchangeable Backs	F-61
Optional Accessories	F-62

Dial Test Indicators

Dial Test Indicator Features	F-67
Horizontal	F-68
Horizontal (20° Tilted Face), Vertical, and Parallel	F-70
Universal	F-72
Pocket	F-73
Contact points, Stems and Holders	F-75

Indicator Calibration

i-Checker, **IC2000**	F-77
UDT-2 Dial Indicator Tester	F-78
Calibration Tester	F-78

Dial Indicator Applications

Thickness Gages	F-79
Contact Force Gage	F-82
Dial Snap Gage	F-83

Stands

Magnetic Base	F-84
Dial Gage	F-86
Comparator, Granite Base	F-88
Comparator, Cast Iron Base	F-90
Transfer	F-91
Quick Guide to Precision Measuring Instruments	F-93

Mitutoyo

ABSOLUTE Digimatic Indicator ID-SX2 SERIES 543

- Cost-effective oriented design
  ID-SX2 indicators come with the minimum of functionality for ease of use. There is a choice of models in the lineup allowing selection of 0.01 mm, 0.001 mm or inch-based measurement resolutions.
- IP53 dust/water protection level
  The models listed below also provide IP53 dust/water protection level specifications:
  543-794(B)-10, **543-795(B)-10** and **543-796(B)-10**
- The ABS (absolute) scale restores the last origin position* automatically when the indicator is turned on, and realizes high reliability by eliminating over-speed errors.
- Equipped with a data output port that enables incorporation into measurement networking and statistical process control systems. (Refer to page A-3)

* Refer to "Origin Setting of Digimatic Indicators" on page F-25.



543-781-10
ID-S1012X2



543-790-10
ID-S112X2



543-794-10
ID-S112PX2

SPECIFICATIONS

Metric

ISO/JIS Type ASME/ANSI/AGD type

Order No.	Range (mm)	Resolution (mm)	Maximum permissible error*1 (mm) MPE$_E$*2	Hysteresis MPE$_H$	Repeatability MPE$_R$	Measuring force MPL (N)	Back type	Battery life*3	Net mass (g)	Dust/Water protection level*4
543-790-10	12.7	0.001	0.003	0.002	0.002	1.5 or less	With lug	Approx. 18,000 hours (Continuous use) Approx. 5 years (Normal use)	150	IP42
543-790B-10							Flat		140	
543-794-10						2.5 or less	With lug		155	IP53
543-794B-10							Flat		155	
543-781-10		0.01	0.02	0.02	0.01	1.5 or less	With lug	Approx. 20,000 hours (Continuous use) Approx. 5 years (Normal use)	150	IP42
543-781B-10							Flat		140	

Inch/Metric

Order No.	Range	Resolution	Maximum permissible error*1 MPE$_E$*2	Hysteresis MPE$_H$	Repeatability MPE$_R$	Measuring force MPL (N)	Back type	Battery life*3	Net mass (g)	Dust/Water protection level*4
543-791-10	0.5 in/ 12.7 mm	0.00005 in /0.001 mm	±0.0001 in /0.003 mm	0.0001 in /0.002 mm	0.0001 in /0.002 mm	1.5 or less	With lug	Approx. 18,000 hours (Continuous use) Approx. 5 years (Normal use)	150	IP42
543-791B-10							Flat		140	
543-792-10							With lug		165	
543-792B-10							Flat		140	
543-793-10		0.0001 in /0.001 mm					With lug		165	
543-793B-10							Flat		140	
543-795-10		0.00005 in /0.001 mm				2.5 or less	With lug		155	IP53
543-795B-10							Flat		155	
543-796-10							With lug		155	
543-796B-10							Flat		155	
543-782-10		0.0005 in /0.01 mm	±0.0010 in /0.02 mm	0.0010 in /0.02 mm	0.0005 in /0.01 mm	1.5 or less	With lug	Approx. 20,000 hours (Continuous use) Approx. 5 years (Normal use)	150	IP42
543-782B-10							Flat		140	
543-783-10							With lug		165	
543-783B-10							Flat		140	

*1 These values apply at 20 °C.
*2 Error of indication for the total measuring range
*3 The battery life varies, depending on the number of times a Digimatic indicator is used as well as the way it is used. The values listed above are approximations.
*4 This is only valid when the data socket cover is in place. Does not apply if the cover is removed, a lifting accessory is attached, or a connecting cable is attached.
Note: Regarding origin setting, refer to "Origin Setting of Digimatic Indicators" on page F-25.

MeasurLink® ENABLED Data Management Software by Mitutoyo

ABSOLUTE™

IP53

Applicable models:
See **SPECIFICATIONS**

Technical Data

- Display: 6-digit LCD, sign
- Usable orientation: All
- Scale type: ABSOLUTE electrostatic linear encoder
- Battery: SR44 (1 pc.), **938882** for initial operational checks (standard accessory)
- Maximum response speed: Unlimited (except for scanning measurement)

Functions

- Origin set (Zero-setting)
- Measuring direction switching
- Data output
- Low battery voltage alarm display
- Error alarm display

Optional Accessories

Lifting lever Lifting knob

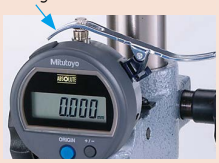



- Lifting
  Lifting lever **21EZA198**
  Lifting knob **21EZA105**
  Lifting cable **21JZA295**
- SPC Cable:
  905338 (1 m)
  905409 (2 m)
- USB Input Tool Direct (2 m): **06AFM380F**

Note: Please separately purchase **USB-ITPAK** since there is no data output switch on the measurement instrument.

- Input Tool Series
  IT-020U (USB Keyboard Signal Conversion Type): **264-020**
  IT-007R (RS-232C Communication Conversion Type): **264-007**
- Connecting Cables for **U-WAVE-T** (160 mm): **02AZD790F**
  For foot switch: **02AZE140F**
- Digimatic Mini-Processor **DP-1VA LOGGER**: **264-505**
- Contact points for Mitutoyo's digimatic indicators (Refer to pages F-57 to F-60 for details.)
- Interchangeable backs for SERIES 2 models (Refer to page F-61 for details.)
- Measuring stands (Refer to pages F-84 to F-91 for details.)

IP53 dust/water protection level*

Level 5: Dust protection
While complete protection against intrusion of dust is not provided, protection is adequate to prevent dust intrusion in amounts that would inhibit the prescribed operations and safety of the electronic equipment.

Level 3: Protection against spraying water
The product suffers no harmful effects when subjected to water sprayed at an angle of up to 60° on both sides.

For details on the dust/water protection level test conditions, refer to IEC 60529: 2001 and JIS C 0920: 2003.

* IP code is the degree of protection against the intrusion of solid foreign objects and water.
Mitutoyo offers a lineup of coolant proof, **ID-N/B** indicators that have excellent resistance to oil, water and dust and so are suitable for use in environments that include splashing cutting fluid. (Refer to page F-8 for details.)

F

Mitutoyo reserves the right to change any or all aspects of any product specification, including prices, designs and service content, without notice.

DIMENSIONS

ISO / JIS Type

Unit: mm

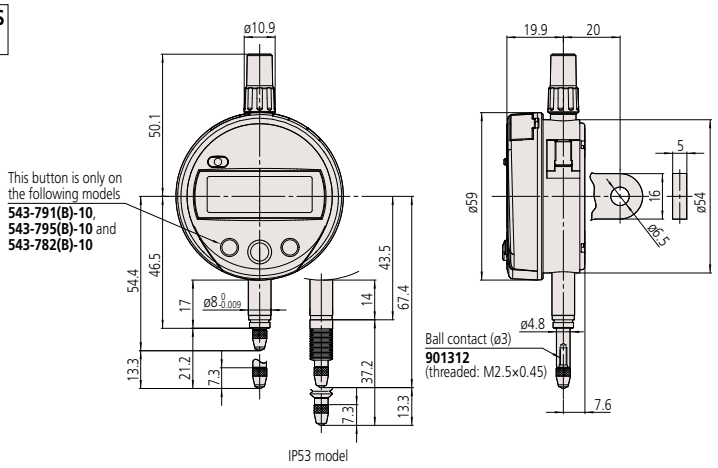

ASME / ANSI / AGD Type

Unit: in

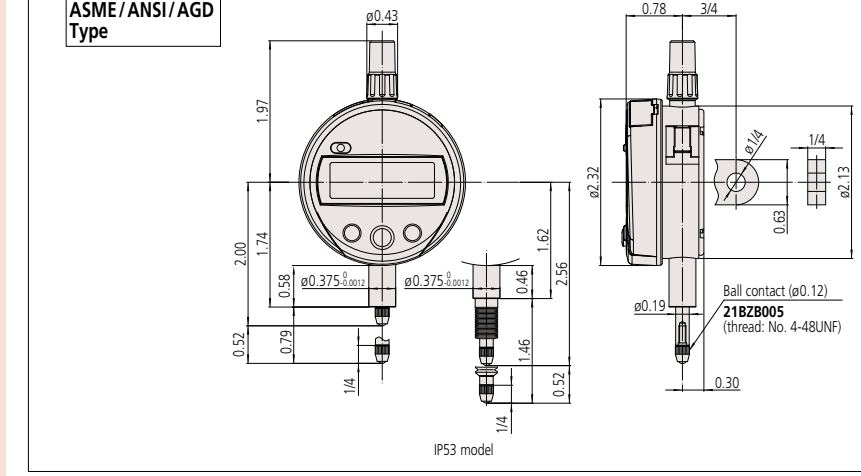

F

MeasurLink® ENABLED
Data Management Software by Mitutoyo

ABSOLUTE™

PROPRIETARY INSPECTION CERTIFICATE

ABSOLUTE Digimatic Indicator ID-CNX SERIES 543 — Standard Type

- Supports bidirectional communication between the **ID-C** and the computer, enabling data output to a computer and setting of various functions of **ID-C** from a computer.
- The ABS (absolute) scale restores the last origin position* automatically when the indicator is turned on, and realizes high reliability by eliminating over-speed errors.
- Tolerance judgment can be performed by setting upper and lower tolerance limits. The judgment result (GO/NO-GO) can be displayed in full-size characters.
- An analog bar indicator has been integrated to make upper/lower limit and turnover point reading more comfortable.
- Battery life of approx. 2.5 years under normal use has been achieved with only one battery.
- Equipped with a data output port that enables incorporation into measurement networking and statistical process control systems. (Refer to page A-3)

* Refer to "Origin Setting of Digimatic Indicators" on page F-25.


Measuring range
12.7 mm
543-700B


Low measuring
force model
543-705B


Measuring range
25.4 mm
543-720B


Measuring range
50.8 mm
543-730B

• Large LCD

A large LCD with an analog bar graph to improve the readability of measurement values.



• Three large buttons

The ease of use has been greatly enhanced thanks to these three large buttons. The user can freely set any frequently used function to the buttons.



- Power switch
- Data output (when connected to an external device)
- Data hold (when no external device is connected)

Switches between the ABS (preset) and INC (zeroset) measurement modes

- Parameter setting mode
  Count direction switching, tolerance judgment setting, resolution switching, scale factor setting, and function lock setting
- inch/mm conversion (inch/mm type)

• 330° rotary display

The display can be rotated 330°, allowing use at a position where you can easily read the measurement value.



• Calibration schedule warning

An icon is displayed on the LCD to notify the user of the set calibration schedule. This function facilitates the proper precision management of the measuring instrument.



The calibration schedule warning icon starts blinking at a set time (e.g. 1 week before the calibration date) before the limit. If the limit is exceeded, the entire screen starts blinking to notify the user.

Technical Data

- Display: 7-digit LCD, sign, and analog bar
- Battery: CR2032 (1 pc.) for initial operational checks (standard accessory)
- Battery life: Approx. 2,700 hours of continuous use. Approx. 2.5 years under normal use.

Note: Depends on use of the indicator. The above values are reference values.

- Maximum response speed: Unlimited (except for scanning measurement)

Functions

- Peak detection (MAX/MIN)
- Runout range measurement (MAX - MIN)
- Zero-setting (INC system)
- Presetting (ABS system)
- Measuring direction switching
- Tolerance judgment
- Resolution switching
  (For 0.0005 mm or 0.00002 inch resolution type)
- Simple calculation: f(x) =Ax
- Function Lock
- Calibration schedule warning
- Auto power ON/OFF
- Data output
- Display value holding
  (when no external device is connected)
- 330° rotary display
- Low battery/voltage alarm display
- Error alarm display

Optional Accessories

- Lifting
  Lifting lever:
  21EZA198 (12.7 mm/0.5 inch type)
  Lifting cable: **21JZA295**
  (stroke 12.7 mm: 12.7 mm/0.5 inch type)
  Lifting knob:
  21EZA105 (12.7 mm/0.5 inch type)*1
  21EZA197 (25.4 mm/1 inch type)
  21EZA200 (50.8 mm/2 inch type)
  Lifting lever: **21EAA426** (for measuring range: 25.4 and 50.8 mm)
  (supplied with 25.4 mm and 50.8 mm models as standard.)

*1 Not available for low measuring force models.

- Auxiliary spindle spring:
  02ACA571 (25.4 mm/1 inch type)*2
  02ACA773 (50.8 mm/2 inch type)*2

*2 Required when orienting the indicator upside down.

- SPC Cable:
  06AGL011 (1 m)
  06AGL021 (2 m)
- USB Input Tool Direct (2 m): **06AGQ001F**
- Input Tool Series
  IT-020U (USB Keyboard Signal Conversion Type):
  264-020
  IT-007R (RS-232C Communication Conversion Type):
  264-007
- Connecting Cables for **U-WAVE-T** (160 mm): **02AZG011**
  For foot switch: **02AZG021**
- Connecting unit for **U-WAVE-TM/TMB:**
  02AZF700 (12.7 mm/0.5 inch type)
- Digimatic Mini-Processor **DP-1VA LOGGER**: **264-505**
- Contact points for Mitutoyo's digimatic indicators
  (Refer to pages F-57 to F-60 for details.)
- Interchangeable backs for SERIES 2 models
  (Refer to page F-61 for details.)
- Measuring stands (Refer to pages F-84 to F-91 for details.)

Mitutoyo reserves the right to change any or all aspects of any product specification, including prices, designs and service content, without notice.

Spindle orientation for measurement

- Standard models with measuring range 12.7 mm: Usable in all orientations.
- Models with measuring range 25.4 or 50.8 mm: Usable between the contact point pointing downward and spindle in horizontal orientation. To use the contact point pointing upward, the auxiliary spindle spring (optional) is required.
- Low measuring force model: See "Setting measuring force on low measuring force models" below.

Setting measuring force on low measuring force models

The measuring force of models with low measuring force can be set by combining standard accessory springs and weights.

• 543-715(B)/716(B)/717(B)

Spindle orientation	Spring	Weight (approximately 0.1 N)	Maximum measuring force (N)
Pointing vertically downward	Yes	Yes	0.5 or less
	Yes	No	0.4 or less
	No	Yes	0.3 or less
	No	No	0.2 or less
Horizontal	Yes	No	0.3 or less

Note: Operation using configurations other than shown above is not guaranteed.

• 543-705(B)/706(B)/707(B)

Spindle orientation	Spring	Weight (approximately 0.1 N)	Maximum measuring force (N)
Pointing vertically downward	Yes	Yes	0.7 or less
	Yes	No	0.6 or less
	No	Yes	0.4 or less
	No	No	Not guaranteed

Note: Operation using configurations other than shown above is not guaranteed.

SPECIFICATIONS

Metric

ISO/JIS type ASME/ANSI/AGD type

Order No. w/lug	Order No. Flat back	Range (mm)	Resolution (mm)	Maximum permissible error MPE*1 (mm) MPE$_E$*3	Hysteresis MPE$_H$	Repeatability MPE$_R$	Measuring force MPL (N)	Net mass (g) w/lug	Net mass (g) Flat back
543-700	**543-700B**	12.7	0.0005/ 0.001/0.01 (selectable)	0.003	0.002	0.002	1.5 or less	175	165
543-705*2	**543-705B***2						0.4 to 0.7	170	160
—	**543-720B**	25.4					1.8 or less	—	195
—	**543-730B**	50.8		0.005			2.3 or less	—	260
543-710	**543-710B**	12.7	0.01	0.02	0.02	0.01	0.9 or less	170	160
543-715*2	**543-715B***2						0.2 to 0.5	165	155
—	**543-725B**	25.4					1.8 or less	—	190
—	**543-735B**	50.8		0.04			2.3 or less	—	245

*1 These values apply at 20 °C.
*2 Low measuring force
*3 Error of indication for the total measuring range

Inch/Metric

Order No. w/lug	Order No. Flat back	Range	Resolution	Maximum permissible error MPE*1 MPE$_E$*3	Hysteresis MPE$_H$	Repeatability MPE$_R$	Measuring force MPL (N)	Net mass (g) w/lug	Net mass (g) Flat back
543-701	**543-701B**	0.5 in/ 12.7 mm	0.00002/ 0.00005/ 0.0001/ 0.0005 in 0.0005/ 0.001/ 0.01 mm (selectable)	±0.00012 in /0.003 mm	0.00008 in /0.002 mm	0.00008 in /0.002 mm	1.5 or less	175	165
543-702	**543-702B**						1.5 or less	195	165
543-706*2	**543-706B***2						0.4 to 0.7	170	160
543-707*2	**543-707B***2						0.4 to 0.7	190	160
—	**543-721B**	1 in/ 25.4 mm					1.8 or less	—	195
—	**543-722B**						1.8 or less	—	195
—	**543-731B**	2 in/ 50.8 mm		±0.0002 in /0.005 mm			2.3 or less	—	260
—	**543-732B**						2.3 or less	—	260
543-711	**543-711B**	0.5 in/ 12.7 mm	0.0005 in/ 0.01 mm	±0.001 in /0.02 mm	0.001 in /0.02 mm	0.0005 in /0.01 mm	0.9 or less	170	160
543-712	**543-712B**						0.9 or less	190	160
543-716*2	**543-716B***2						0.2 to 0.5	165	155
543-717*2	**543-717B***2						0.2 to 0.5	185	155
—	**543-726B**	1 in/ 25.4 mm					1.8 or less	—	190
—	**543-727B**						1.8 or less	—	190
—	**543-736B**	2 in/ 50.8 mm		±0.0015 in /0.04 mm			2.3 or less	—	245
—	**543-737B**						2.3 or less	—	245

*1 These values apply at 20 °C.
*2 Low measuring force
*3 Error of indication for the total measuring range

DIMENSIONS

12.7 mm range models

ISO/JIS Type Unit: mm

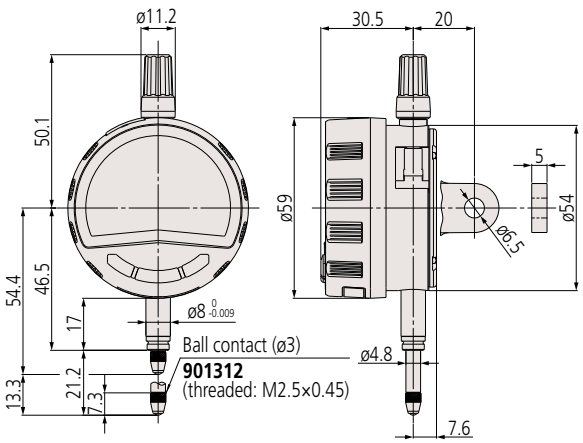

ASME/ANSI/AGD Type Unit: in

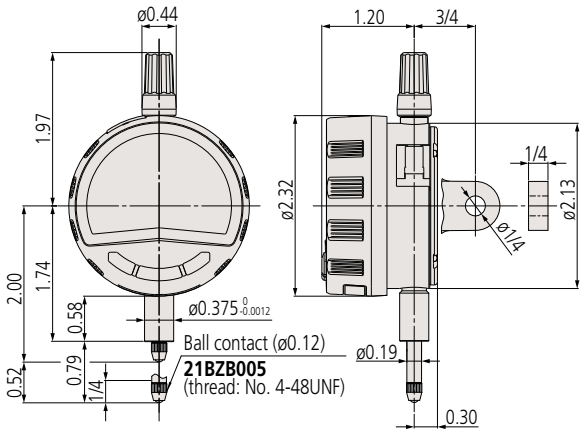

Note: Products with an Order No. suffixed "**B**" have a plain back, and other models have a center-lug back. Refer to page F-61 for details of the backs.

F

DIMENSIONS

25.4 mm range models

Unit: mm

ISO / JIS Type

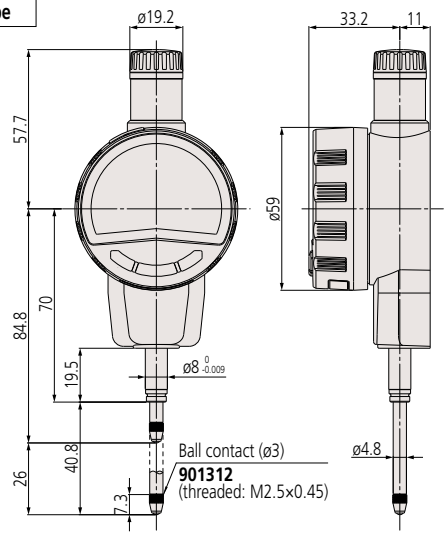

Unit: in

ASME / ANSI / AGD Type

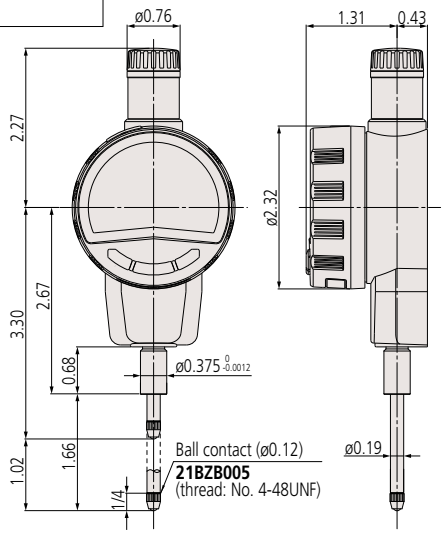

50.8 mm range models

Unit: mm

ISO / JIS Type

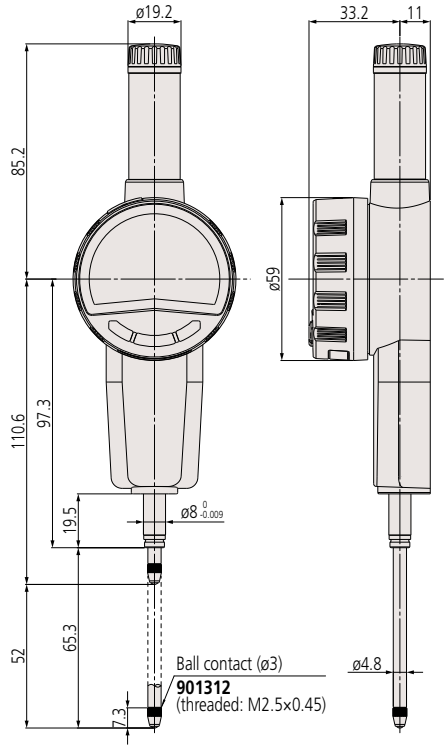

Unit: in

ASME / ANSI / AGD Type

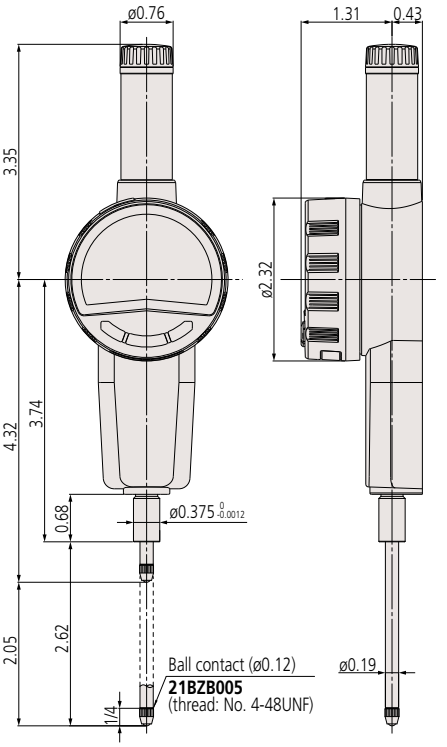

Note: Products with an Order No. suffixed "**B**" have a plain back, and other models have a center-lug back. Refer to page F-61 for details of the backs.

Mitutoyo reserves the right to change any or all aspects of any product specification, including prices, designs and service content, without notice.

MeasurLink® ENABLED
Data Management Software by Mitutoyo

ABSOLUTE™

IP66

Dust- and Water-Protected
TÜVRheinland CERTIFIED
www.tuv.com ID 0000007161

Applicable models:
543-57X

Dust- and Water-Protected
TÜVRheinland CERTIFIED
www.tuv.com ID 0000007162

Applicable models:
543-58X

Functions

- Zero-setting (INC system)
- Presetting (ABS system)
- Measuring direction switching
- Tolerance judgment
- LCD readout reversal
- Resolution switching
  (For 0.001 mm or 0.00005 in resolution type)
- Data output
- Display value holding
  (when no external device is connected)
- Low battery voltage alarm display
- Error alarm display

ABSOLUTE Digimatic Indicator ID-N/B SERIES 543 — with Dust/Water Protection Conforming to IP66

- The ABS (absolute) scale restores the last origin position* automatically when the indicator is turned on, and realizes high reliability by eliminating over-speed errors.
- Rated to IP66: can be used satisfactorily even in adverse environments where the indicator is subject to splashing by cutting fluid or coolant.
- Slim body design (body width: only 35 mm) is advantageous in multipoint measurement situations where space is restricted. The LCD readout can also be rotated 180° to allow reading from the most convenient direction.

* Refer to "Origin Setting of Digimatic Indicators" on page F-25.

- Succeeded in digitalization of the Back Plunger type widely used for dial indicators for **ID-B**. A 5 mm-stroke plunger with a higher degree of accuracy has been implemented by adopting a direct reading scale for plunger displacement.
- Tolerance judgment can be performed by setting upper and lower tolerance limits. The judgment result (GO/NO-GO) can be displayed in full-size characters.
- Equipped with a data output port that enables incorporation into measurement networking and statistical process control systems. (Refer to page A-3)





Rated to IP66 water- and dust-proofing standard and oil resistance improved.



Body width 35 mm



LCD readout reversal function

SPECIFICATIONS

ISO/JIS type ASME/ANSI/AGD type

Metric

Order No.	Range (mm)	Resolution (mm)	Maximum permissible error (mm)			Measuring force MPL (N)	Remarks
			MPE[E]*	Hysteresis MPE[H]	Repeatability MPE[R]		
543-570	12.7	0.01	0.02	0.02	0.01	2.5 or less	Slim type
543-580	5.0					2.0 or less	Back Plunger type
543-575	12.7	0.01/0.001 (selectable)	0.01/0.003	0.002	0.002	2.5 or less	Slim type
543-585	5.0					2.0 or less	Back Plunger type

Inch/Metric

Order No.	Range (in)	Resolution	Maximum permissible error			Measuring force MPL (N)	Remarks
			MPE[E]*	Hysteresis MPE[H]	Repeatability MPE[R]		
543-571	0.5	0.0005 in/0.01 mm	±0.001 in/0.02 mm	0.001 in/0.02 mm	0.0005 in/0.01 mm	2.5 or less	Slim type
543-581	0.2					2.0 or less	Back Plunger type
543-576	0.5	0.00005/0.0005 in 0.001/0.01 mm (selectable)	±0.0001 in/0.003 mm	0.0001 in/0.002 mm	0.0001 in/0.002 mm	2.5 or less	Slim type
543-586	0.2					2.0 or less	Back Plunger type

* Error of indication for the total measuring range
Note: One silver oxide button cell (SR44) for monitor included

Mitutoyo reserves the right to change any or all aspects of any product specification, including prices, designs and service content, without notice.

Mitutoyo

Typical applications

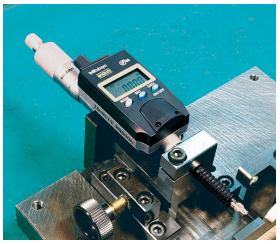

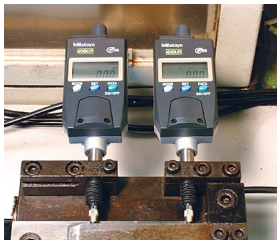
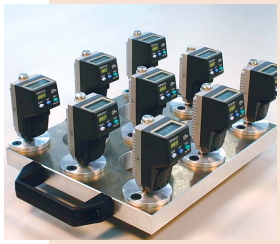
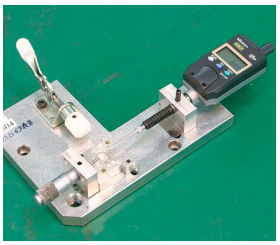
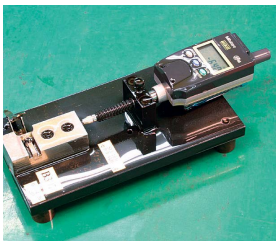
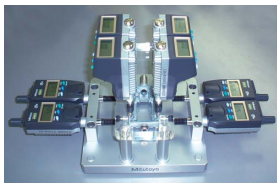

DIMENSIONS

Slim Type
ID-N

Unit: mm

ISO/JIS Type

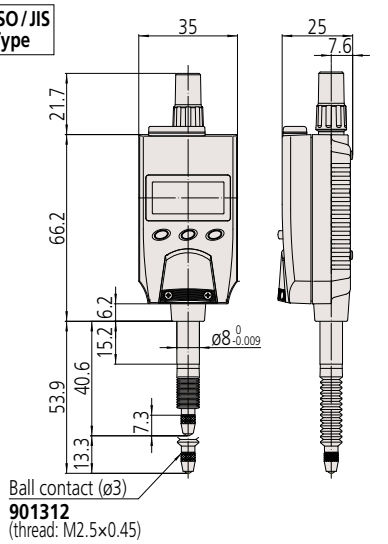

Unit: in

ASME/ANSI/AGD Type

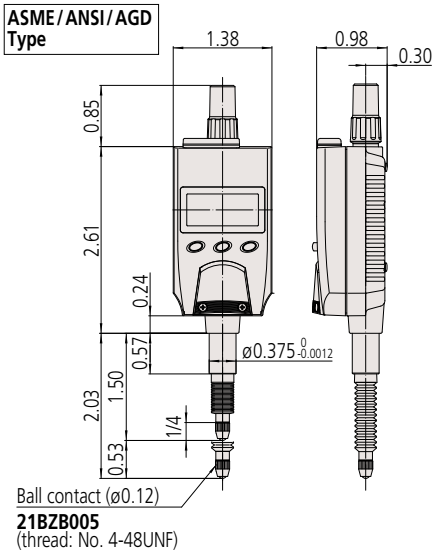

Back plunger Type
ID-B

ISO/JIS Type

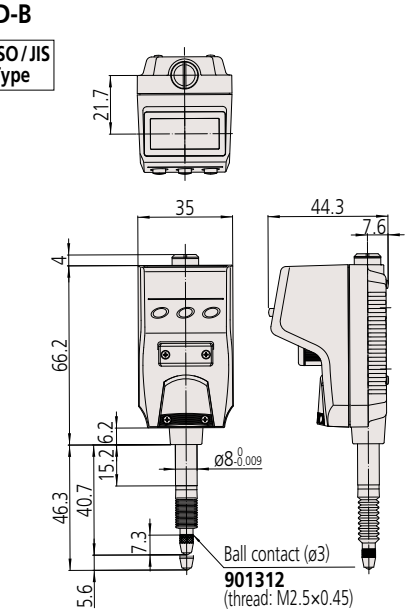

ASME/ANSI/AGD Type

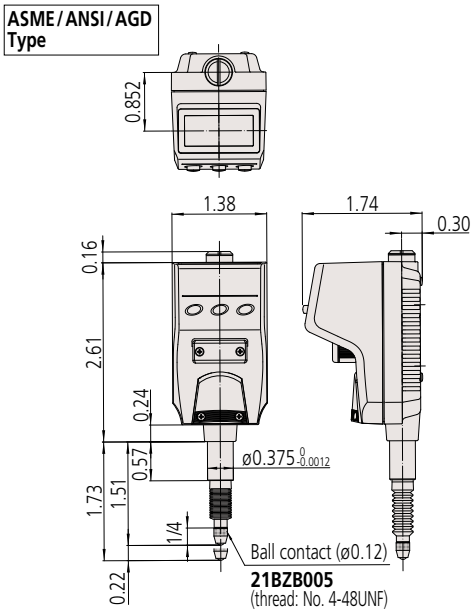

Optional Accessories

- Lug
  21EZA145 (ISO/JIS type)
  21EZA146 (ASME/ANSI/AGD type)
- Contact points for Mitutoyo's digimatic indicators. (Refer to pages F-57 to F-60 for details.)
- Lifting knob (only for **ID-N**)
  21EZA105 (ISO/JIS type)
  21EZA150 (ASME/ANSI/AGD type)
  Spindle can be manually lifted. Remove the spindle cap for **ID-N** and attach the lifting knob to the spindle. Note that water resistance is not maintained in this configuration.

Typical application using the lifting knob



- Arm for **ID-B** (made-to-order)
- Rubber boot
  For oil resistance (NBR) **21EAA423** (for **ID-N**)
  21AAB562 (for **ID-B**)
  For durability (silicone) **238774** (for **ID-N**)
  21EAA212 (for **ID-B**)
- SPC cable:
  21EAA194 (1 m)
  21EAA190 (2 m)

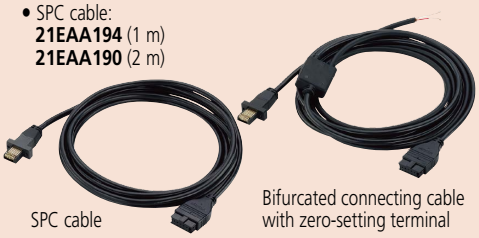

SPC cable

Bifurcated connecting cable with zero-setting terminal

- USB Input Tool Direct (2 m): **06AFM380G**
- Input Tool Series
  IT-020U (USB Keyboard Signal Conversion Type): **264-020**
  IT-007R (RS-232C Communication Conversion Type): **264-007**
- Connecting Cables for **U-WAVE-T** (160 mm): **02AZD790G**
  For foot switch: **02AZE140G**
- Digimatic Mini-Processor **DP-1VA LOGGER**: **264-505**
- Bifurcated connecting cable with zero-setting terminal:
  21EAA210 (1 m)
  21EAA211 (2 m)
  Two of the wires inside the cable are separated for zero setting without touching the SET switch on the main body. Use these wires in combination with commercially available switches. Zero setting is performed by briefly connecting these two wires together (less than a second), and ABS preset & recall by connecting for a second or more.

Mitutoyo reserves the right to change any or all aspects of any product specification, including prices, designs and service content, without notice.

MeasurLink® ENABLED
Data Management Software by Mitutoyo

ABSOLUTE™

PROPRIETARY INSPECTION CERTIFICATE

ABSOLUTE Digimatic Indicator ID-C SERIES 543 — Peak-Value Hold Type

- Run-out/MAX-MIN Hold function enables GO/NG judgment*1 for peak or difference values.
- Five buttons, status icons, and clear button indications allow for easy operation of a wide variety of functions.
- Wide LCD and new analog bar graph are now standard on all models.
- The ABS (absolute) scale restores the last origin position*2 automatically when the indicator is turned on, and realizes high reliability by eliminating over-speed errors.
- By using the parameter setup kit (optional) and the dedicated software, the functions and the parameters can be configured using a computer.
- Equipped with a data output port that enables incorporation into measurement networking and statistical process control systems. (Refer to page A-3)

*1 Tolerance judgment results cannot be output.
*2 Refer to "Origin Setting of Digimatic Indicators" on page F-25.



543-300-10 / 543-300B-10

Functions

- Peak detection (MAX/MIN)
- Runout (MAX - MIN) Hold

Note: Peak detection
1) Sampling rate: 50 readings/s
2) Capturing speed: 50 µm/s (max.)

- Zeroset (INC system)
- Preset function (ABS system)
- Measuring direction switching
- Tolerance judgment (3 pairs of ABS, INC memory function)
- Resolution selection
- Simple calculation f(x) =Ax
- Analog bar resolution selection
- Key lock
- in/mm conversion (inch/mm type)
- Display hold (when no external device is connected)
- Data output
- External PC setting input
- Display rotation (330°)
- Low battery voltage alarm display
- Error alarm display

Optional Accessories

- Lifting
  Lifting lever **21EZA198**
  Lifting knob **21EZA105**
- SPC Cable:
  905338 (1 m)
  905409 (2 m)
- USB Input Tool Direct (2 m) : **06AFM380F**
- Input Tool Series
  IT-020U (USB Keyboard Signal Conversion Type): **264-020**
  IT-007R (RS-232C Communication Conversion Type): **264-007**
- Connecting Cables for **U-WAVE-T** (160 mm): **02AZD790F**
  For foot switch: **02AZE140F**
- Digimatic Mini-Processor **DP-1VA LOGGER**: **264-505**
- Parameter setup kit: **21EZA313**

Note: Parameter setting software (can be downloaded for free from the Mitutoyo website) is also required.



Parameter setup kit

Parameter setting software

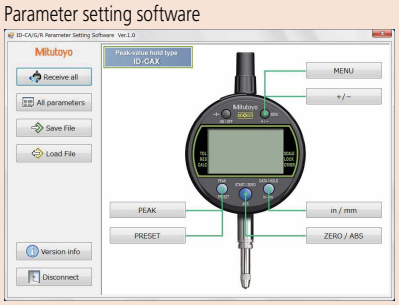

SPECIFICATIONS

ISO/JIS type ASME/ANSI/AGD type

Metric

Order No. (w/lug, flat back)	Range (mm)	Resolution (mm)	Maximum permissible error (mm)			Measuring force MPL (N)	Power supply	Battery life (normal use)*2	Net mass (g)
			MPE_E*1	Hysteresis MPE_H	Repeatability MPE_R				
543-300-10	12.7	0.001/ 0.01 (selectable)	0.003	0.002	0.002	1.5 or less	CR2032x1 pc.	Approx. 1 year	180
543-300B-10*3									170

Inch / Metric

Order No. (w/lug, flat back)	Range	Resolution	Maximum permissible error			Measuring force MPL (N)	Power supply	Battery life (normal use)*2	Net mass (g)
			MPE_E*1	Hysteresis MPE_H	Repeatability MPE_R				
543-301-10	0.5 in/ 12.7 mm	0.00005/ 0.0001/ 0.0005 in, 0.001/0.01 mm (selectable)	±0.00010 in /0.003 mm	0.00010 in /0.002 mm	0.00010 in /0.002 mm	1.5 or less	CR2032x1 pc.	Approx. 1 year	180
543-301B-10*3									170
543-302-10									195
543-302B-10*3									170

*1 Error of indication for the total measuring range
*2 Applies only if not connected to a data processor. Battery life depends on use of the indicator. Use the above value as a guide only.
*3 Flat back

F

Mitutoyo reserves the right to change any or all aspects of any product specification, including prices, designs and service content, without notice.

Mitutoyo

DIMENSIONS

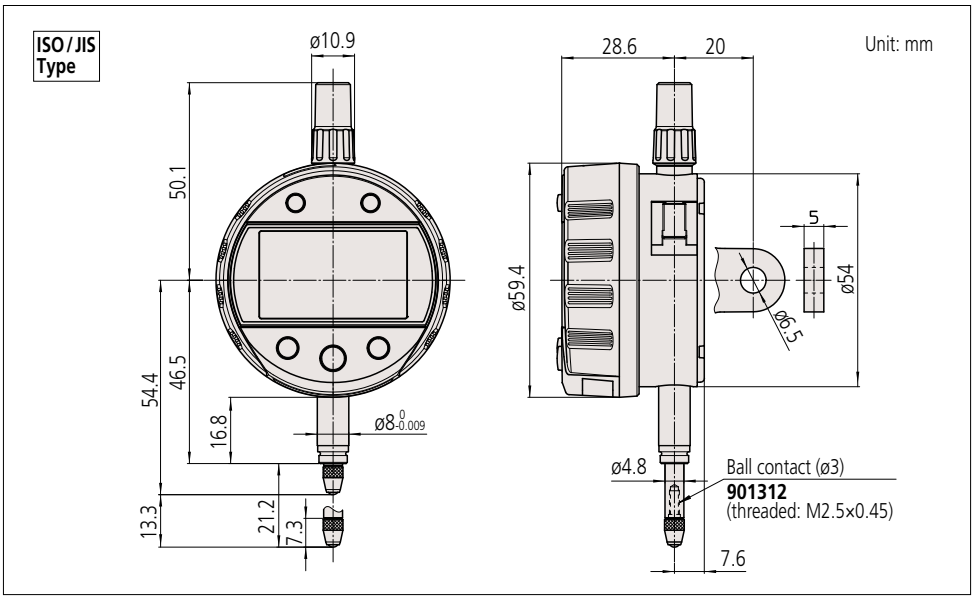

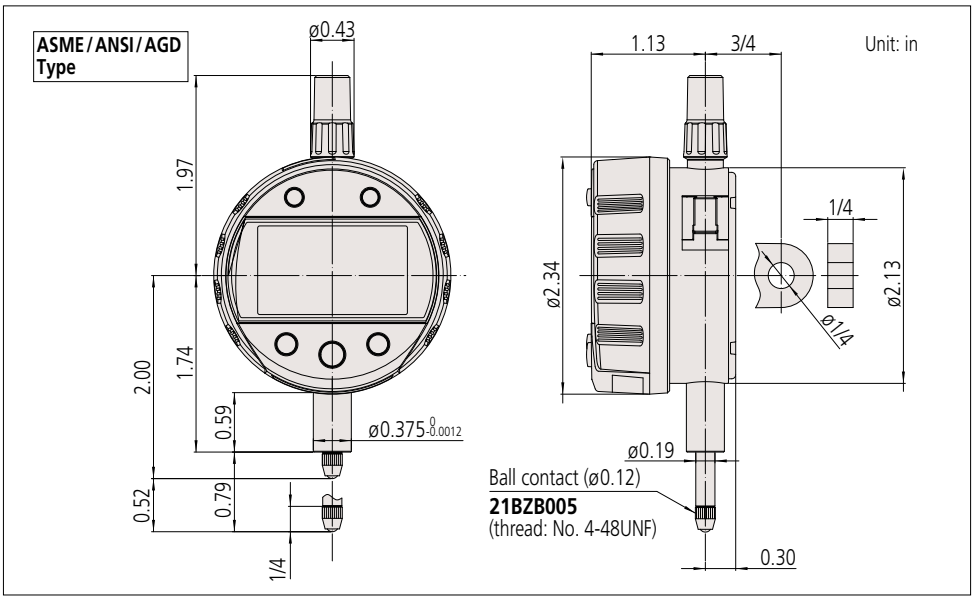

F

Mitutoyo reserves the right to change any or all aspects of any product specification, including prices, designs and service content, without notice.

MeasurLink® ENABLED
Data Management Software by Mitutoyo

ABSOLUTE™

PROPRIETARY INSPECTION CERTIFICATE

Functions

- Minimum value detection

Note: Peak detection
1) Sampling rate: 50 readings/s
2) Capturing speed: 50 µm/s (max.)

- Preset (3 Preset values can be stored)
- Tolerance judgment
  (3 sets of upper and lower limits can be stored)
- Resolution selection
- Analog bar resolution selection
- Key lock
- Display hold (when no external device is connected)
- Data saving/calling
  (when no external device is connected)
- Data output
- External PC setting input
- Display rotation (330°)
- Low battery voltage alarm display
- Error alarm display

Optional Accessories

- SPC Cable:
  905338 (1 m)
  905409 (2 m)
- USB Input Tool Direct (2 m): **06AFM380F**
- Input Tool Series
  IT-020U (USB Keyboard Signal Conversion Type):
  264-020
  IT-007R (RS-232C Communication Conversion Type):
  264-007
- Connecting Cables for **U-WAVE-T** (160 mm):
  02AZD790F
  For foot switch: **02AZE140F**
- Digimatic Mini-Processor **DP-1VA LOGGER**: **264-505**
- Parameter setup kit: **21EZA313**

Note: Parameter setting software (can be downloaded for free from the Mitutoyo website) is also required.

The ABSOLUTE Digimatic Bore Gage



ABSOLUTE Digimatic Bore Gages, which integrate the display with a bore gage measuring unit, are also available. Refer to pages C-47 and C-48 for details.



ABSOLUTE Digimatic Indicator ID-C SERIES 543 — Bore Gage Type

- Dedicated to inside measurement with minimum-value Hold and tolerance judgment functions*1.
  Use together with a Mitutoyo bore gage (refer to pages C-29 to C-46 for details).
- Five buttons, status icons, and clear button indications allow for easy operation of a wide variety of functions.
- Wide LCD and new analog bar graph are now standard on all models.
- Can store up to three sets of master reference values and tolerances, alleviating the need for multiple settings to master gages.
- The ABS (absolute) scale restores the last origin position*2 automatically when the indicator is turned on, and realizes high reliability by eliminating over-speed errors.
- By using the parameter setup kit (optional) and the dedicated software, the functions and the parameters can be configured using a computer.
- Equipped with a data output port that enables incorporation into measurement networking and statistical process control systems. (Refer to page A-3)

*1 Tolerance judgment results cannot be output.
*2 Refer to "Origin Setting of Digimatic Indicators" on page F-25.





543-310B-10
Typical application
The Bore Gage is optional.

SPECIFICATIONS

Metric

ISO/JIS type ASME/ANSI/AGD type

Order No.	Range (mm)	Resolution (mm)	Maximum permissible error (mm)			Measuring force MPL (N)	Power supply	Battery life (normal use)*2	Net mass (g)
			MPE_E*1	Hysteresis MPE_H	Repeatability MPE_R				
543-310B-10	12.7	0.001/0.01 (selectable)	0.003	0.002	0.002	1.5 or less	CR2032 ×1 pc.	Approx. 1 year	170

Inch/Metric

Order No.	Range	Resolution	Maximum permissible error			Measuring force MPL (N)	Power supply	Battery life (normal use)*2	Net mass (g)
			MPE_E*1	Hysteresis MPE_H	Repeatability MPE_R				
543-311B-10	0.5 in/ 12.7 mm	0.00005/0.0001/ 0.0005 in, 0.001/0.01 mm (selectable)	±0.00010 in /0.003 mm	0.00010 in /0.002 mm	0.00010 in /0.002 mm	1.5 or less	CR2032 ×1 pc.	Approx. 1 year	170
543-312B-10									

*1 Error of indication for the total measuring range
*2 Applies only if not connected to a data processor. Battery life depends on use of the indicator. Use the above value as a guide only.
Note: Flat-back type only.

F

Mitutoyo reserves the right to change any or all aspects of any product specification, including prices, designs and service content, without notice.

Mitutoyo

DIMENSIONS

ISO / JIS Type

Unit: mm

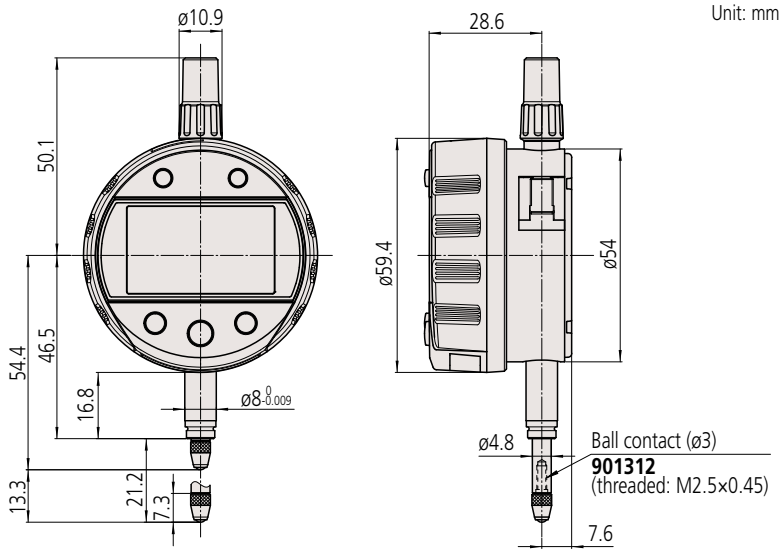

ASME / ANSI / AGD Type

Unit: in

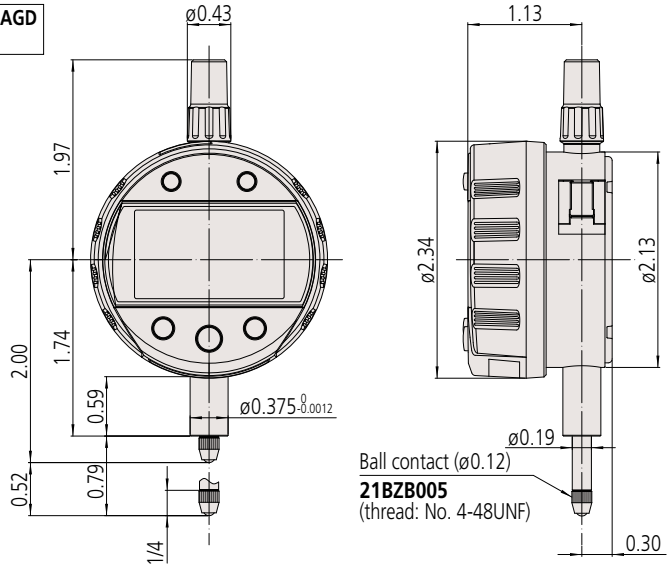

F

Mitutoyo reserves the right to change any or all aspects of any product specification, including prices, designs and service content, without notice.

MeasurLink® ENABLED Data Management Software by Mitutoyo

ABSOLUTE™

PROPRIETARY INSPECTION CERTIFICATE

ABSOLUTE Digimatic Indicator ID-C SERIES 543 — Calculation Type

- Calculation function operates on spindle displacement.
  Entering the appropriate formula factors for a fixture dedicated to the application enables direct measurement readout, thereby eliminating any need for the conversion tables previously needed for those applications where fixtures are typically used.
- Five buttons, status icons, and clear button indications allow for easy operation of a wide variety of functions.
- Wide LCD and new analog bar graph are now standard on all models.
- The ABS (absolute) scale restores the last origin position* automatically when the indicator is turned on, and realizes high reliability by eliminating over-speed errors.
- By using the parameter setup kit (optional) and the dedicated software, the functions and the parameters can be configured using a computer.
- Equipped with a data output port that enables incorporation into measurement networking and statistical process control systems. (Refer to page A-3)

* Refer to "Origin Setting of Digimatic Indicators" on page F-25.



543-342B-10

Functions

- Calculation f (x') =Ax'+B+Cx'$^{-1}$
  (x'=x+offset)
- Peak detection (MAX/MIN)
- Runout (MAX - MIN) Hold

Note: Peak detection
1) Sampling rate: 10 readings/s
2) Capturing speed: 10 µm/s (max.)

Settings can be changed to:
1) Sampling rate: 50 readings/s
2) Capturing speed: 50 µm/s (max.)

- Zero-setting (INC system)
- Preset (ABS system)
- Tolerance judgment
  (3 pairs of ABS, INC memory function)
- Analog bar resolution selectable
- Key lock
- Display hold (when no external device is connected)
- Data output
- External PC setting input
- Display rotation (330°)
- Low battery voltage alarm display
- Error alarm display
- Resolution switching*

Resolution (mm)		
0.0002	0.005	0.1
0.0005	0.01	0.2
0.001	0.02	0.5
0.002	0.05	1

Resolution (in)		
0.00001	0.0002	0.005
0.00002	0.0005	0.01
0.00005	0.001	0.02
0.0001	0.002	0.05

* Since the calculation resolution is one micrometer (0.001 mm), using sub-micrometer resolution settings may result in the 4th-place digit being unreliable, particularly when B is set to a very low value and C=0. It does not change at all with certain combinations of calculation coefficient (for example, A=1, B=C=0). The 3rd-place digit representing micrometers (if displayed) is always reliable.

Optional Accessories

- Lifting
  Lifting lever **21EZA198**
  Lifting knob **21EZA105**
- SPC Cable:
  905338 (1 m)
  905409 (2 m)
- USB Input Tool Direct (2 m): **06AFM380F**
- Input Tool Series
  IT-020U (USB Keyboard Signal Conversion Type): **264-020**
  IT-007R (RS-232C Communication Conversion Type): **264-007**
- Connecting Cables for **U-WAVE-T** (160 mm): **02AZD790F**
  For foot switch: **02AZE140F**
- Digimatic Mini-Processor **DP-1VA LOGGER**: **264-505**
- Parameter setup kit: **21EZA313**

Note: Parameter setting software (can be downloaded for free from the Mitutoyo website) is also required.

SPECIFICATIONS

ISO/JIS type ASME/ANSI/AGD type

Metric

Order No.	Range (mm)	Resolution (selectable)	Maximum permissible error*1 (mm) MPE$_E$*2	Hysteresis MPE$_H$	Repeatability MPE$_R$	Measuring force MPL (N)	Power supply	Battery life (normal use)*4	Net mass (g)
543-340B-10	12.7	12 steps*4	0.003	0.002	0.002	1.5 or less	CR2032x1 pc.	Approx. 1 year	170
543-590B-10	25.4					1.8 or less*3			190
543-595B-10	50.8		0.006			2.3 or less*3			260

Inch/Metric

Order No.	Range	Resolution (selectable)	Maximum permissible error*1 MPE$_E$*2	Hysteresis MPE$_H$	Repeatability MPE$_R$	Measuring force MPL (N)	Power supply	Battery life (normal use)*4	Net mass (g)
543-341B-10	0.5 in /12.7 mm	12 steps*4	±0.0001 in /0.003 mm	0.0001 in /0.002 mm	0.0001 in /0.002 mm	1.5 or less	CR2032x1 pc.	Approx. 1 year	170
543-342B-10									
543-591B-10	1 in /25.4 mm					1.8 or less*3			190
543-592B-10									
543-596B-10	2 in /50.8 mm		±0.00025 in /0.006 mm			2.3 or less*3			260
543-597B-10									

*1 Valid for resolution set to 0.001 mm/0.00005 in and coefficients A=1, B=0 and C=0.
*2 Error of indication for the total measuring range
*3 Applies for a spindle orientation between the spindle pointing vertically downward to the spindle horizontal.
*4 Applies only if not connected to a data processor. Battery life depends on use of the indicator. Use the above value as a guide only.
Note: Flat-back type only.

F

Mitutoyo reserves the right to change any or all aspects of any product specification, including prices, designs and service content, without notice.

Mitutoyo

DIMENSIONS

ISO / JIS Type

Unit: mm

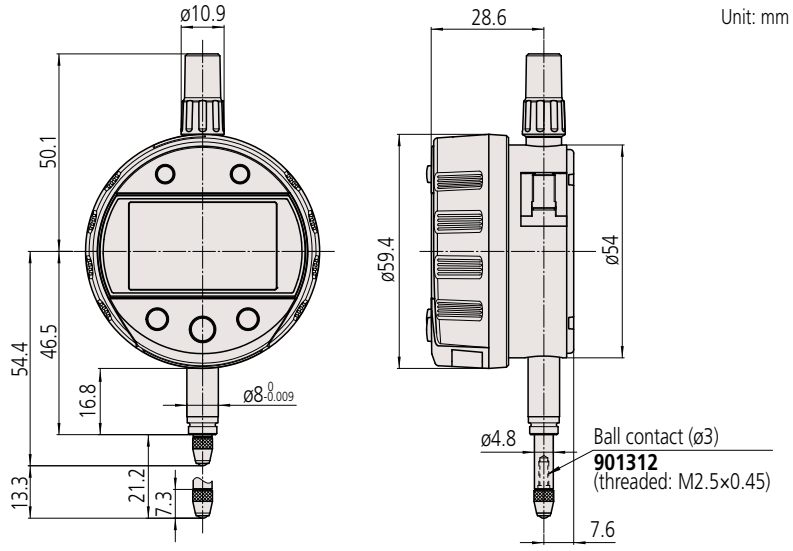

ASME / ANSI / AGD Type

Unit: in

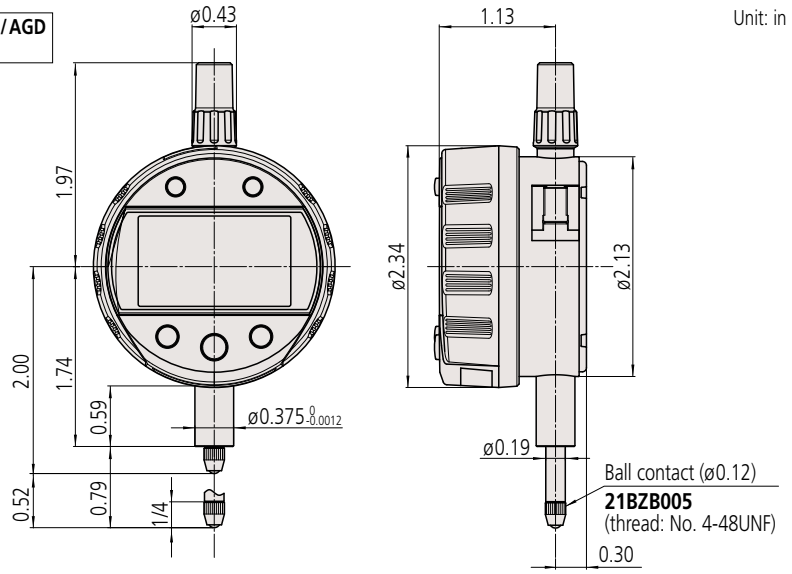

F

Mitutoyo reserves the right to change any or all aspects of any product specification, including prices, designs and service content, without notice.

Typical applications









Examples of measuring various features

Item		D=Countersink diameter/Groove width; H=Countersink depth/Groove depth				R=Outside radius of round object		R=Inside radius of round object	R=Outside radius of round object
Fixture type*1						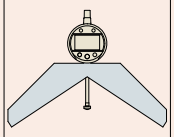	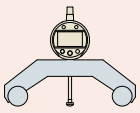		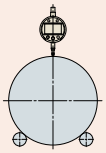
Contact point		Cone	Ball		Cone	—			
Measuring method x: Spindle displacement		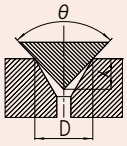	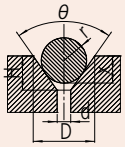		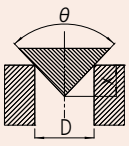	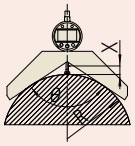	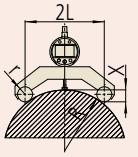	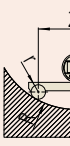	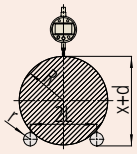
Calculation		D=Ax	D=Ax+B	H=Ax+B	D=Ax	R=Ax	R=Ax+B+Cx^{-1}		R=A(x+d)+B+C(x+d)$^{-1}$
Coefficient values	A	$-2tan\frac{\theta}{2}$	$-2tan\frac{\theta}{2}$	-1	$-2tan\frac{\theta}{2}$	$-\frac{sin\frac{\theta}{2}}{1-sin\frac{\theta}{2}}$	$\frac{1}{2}$	$-\frac{1}{2}$	$\frac{1}{2}$
	B	0	$2r\left(\frac{1}{cos\frac{\theta}{2}}-tan\frac{\theta}{2}\right)$	$r\left(\frac{1}{sin\frac{\theta}{2}}-1\right)-\frac{d}{2tan\frac{\theta}{2}}$	0	0	$-r$	r	$-r$
	C	0	0	0	0	0	$\frac{L^2}{2}$	$-\frac{L^2}{2}$	$\frac{L^2}{2}$
Origin offset value (function ON/OFF)	d	0 (OFF)	0 (OFF)	0 (OFF)	0 (OFF)	0 (OFF)	0 (OFF)	0 (OFF)	d (ON)
ORIGIN-set position (x=0 position)		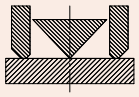			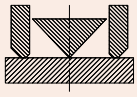	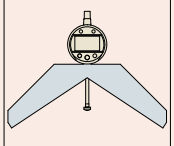	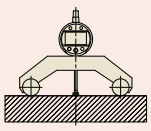		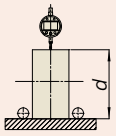
Displayed measurement value at ORIGIN-set position (Value displayed when x=0)		0	Value of coefficient B	0	0	0	Err 30*2 (Overflow error of Display value)		Depends on value of d

*1 A dedicated fixture for a workpiece can be made to order.
*2 The error is cleared when the measured value returns to the displayable range as a result of moving the spindle.

F

ABSOLUTE Digimatic Indicator ID-C
SERIES 543 — Signal Output Function Type

- Enables GO/NG judgment to be output to external equipment for a measurement result against the peak values set. Solid-state switching provides high reliability by avoiding metallic switch contacts.
- The signal can be output to an external device such as a sequencer. The GO/NG judgment result is also indicated by the green/red LED and the signs on LCD.
- A peak-detection function makes runout measurements easy.
- The ABS (absolute) scale restores the last origin position* automatically when the indicator is turned on, and realizes high reliability by eliminating over-speed errors.
- Provided with a 4 m cable.
- External power supply required is 5-24 VDC/100 mA (max.).
- Dust-water protection level: IP54.

* Refer to "Origin Setting of Digimatic Indicators" on page F-25.



543-350-10

SPECIFICATIONS

Metric

ISO/JIS type ASME/ANSI/AGD type

Order No.	Range (mm)	Resolution (mm)	Maximum permissible error (mm)			Measuring force MPL (N)	Net mass (g)
			MPE_E*1	Hysteresis MPE_H	Repeatability MPE_R		
543-350-10	12.7	0.001/0.01 (selectable)	0.003	0.002	0.002	2.5 or less	295
543-350B-10*2							285

Inch/Metric

Order No.	Range	Resolution	Maximum permissible error			Measuring force MPL (N)	Net mass (g)
			MPE_E*1	Hysteresis MPE_H	Repeatability MPE_R		
543-351-10	0.5 in /12.7 mm	0.00005/0.0001/ 0.0005 in, 0.001/0.01 mm (selectable)	±0.00010 in /0.003 mm	0.0001 in /0.002 mm	0.0001 in /0.002 mm	2.5 or less	295
543-351B-10*2							285
543-352-10							295
543-352B-10*2							285

*1 Error of indication for the total measuring range
*2 Flat back
Note 1: LCD readout does not rotate.
Note 2: MAX/MIN holding: sample rate is 100 readings/s; max. rate of change of reading is 100 µm/s or less.
Note 3: Standard contact point: **901312** (ISO/JIS type), **21BZB005** (ANSI/AGD type)

ABSOLUTE™ PROPRIETARY INSPECTION CERTIFICATE

IP54

Functions

- Signal output (–NG/OK/+NG, N-ch open drain, logical invert is available)
- Remote control (peak start preset/zero-set)
- Peak detection (MAX/MIN)
- Runout range measurement (MAX - MIN)
- Zero-setting (INC system)
- Presetting (ABS system)
- Measuring direction switching
- Tolerance judgment (3 pairs of ABS, INC memory function)
- Resolution switching
- Simple calculation: f(x) =Ax
- Key lock
- Calibration mode (Signal output in Digimatic code format)
- Error alarm display

Optional Accessories

- Lifting*1
  Lifting lever **21EZA198**
  Lifting knob **21EZA105**
- Digimatic power supply unit: **21EZA345**
  To denote your AC power cable add the following suffixes to the order No.: **A** for UL/CSA, **D** for CEE, **DC** for CCC, **E** for KC. **No suffix** is required for JIS/100VAC.
  Used in the calibration mode when executing automatic inspection using i-Checker **IC2000**.
  In such a case, purchase connecting cable **21EAA194** (1 m), or **21EAA190** (2 m).

Note: It can't be used as a power suppy when using in the normal mode.

- Contact points for Mitutoyo's digimatic indicators.*2
- Interchangeable backs for SERIES 2 models (Refer to page F-61 for details.)

*1 Dust-water protection is not guaranteed.
*2 Refer to pages F-57 to F-60 for details.

Output signals and LCD display

Wire	– NG	OK	+ NG	ABS data composition error
Orange (– NG)	Low	High	High	High
Green (OK)	High	Low	High	High
Brown (+ NG)	High	High	Low	High
LED	Red	Green	Red	Red flashing
LCD	◁	○	▷	"x.xxE" indication

Note: Logical invert is available.

I/O Specifications

Wire	Signal	I/O	Description
Black	– V (GND)	—	Connected to minus (-) terminal
Red	+ V	—	Power supply (5 to 24 VDC)
Orange	– NG	O	Tolerance judgment result output: Only the terminal corresponding to a judgment result is set to the low level.
Green	OK	O	
Brown	+ NG	O	
Yellow	PRESET_RECALL ZERO	I	External input terminal: If the relevant terminal is set to the low level, its signal becomes true.
Blue	PEAK_START	I	
Shield	FG	—	Connected to GND (Earth)

Note: Measurement data cannot be output.

Output

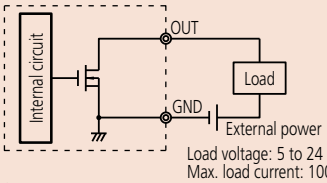

Load voltage: 5 to 24 VDC
Max. load current: 100 mA or less

Input

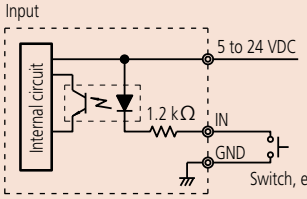

Input current: Max. 20 mA

Mitutoyo reserves the right to change any or all aspects of any product specification, including prices, designs and service content, without notice.

DIMENSIONS

ISO / JIS Type

Unit: mm

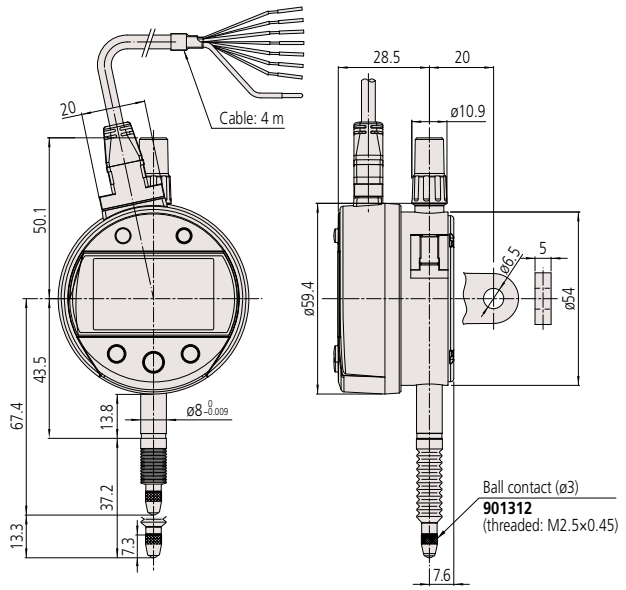

ASME / ANSI / AGD Type

Unit: in

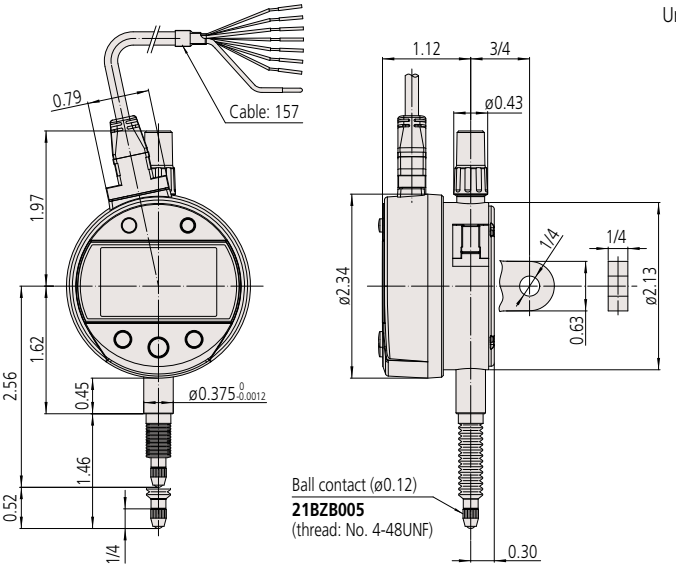

F

MeasurLink® ENABLED Data Management Software by Mitutoyo

ABSOLUTE™

PROPRIETARY INSPECTION CERTIFICATE

ABSOLUTE Digimatic Indicator ID-U SERIES 575 — Slim and Economical Design

- General-purpose slim indicator with a measuring range of 25.4 mm and a resolution of 0.01 mm.
- Cost-effective and user-friendly type with basic functions.
- The ABS (absolute) scale restores the last origin position* automatically when the indicator is turned on, and realizes high reliability by eliminating over-speed errors.
- Battery life: approx. 20,000 hours in continuous use.
- Easy-to-read large LCD readout with a character height of 8 mm.
- Equipped with a data output port that enables incorporation into measurement networking and statistical process control systems. (Refer to page A-3)

* Refer to "Origin Setting of Digimatic Indicators" on page F-25.



575-121

Technical Data

- Display: 5-digit LCD, sign
- Battery: SR44 (1 pc.), **938882** for initial operational checks (standard accessory)
- Battery life: Approx. 20,000 hours of continuous use. Approx. 5 years under normal use.

Note: It varies depending on use frequency and method. Please take the values as rough indications.

- Lifting lever: **21EAA426** (standard accessory)

Function

- Origin set (Zero-setting)
- Measuring direction switching
- Data output
- Low battery voltage alarm display
- Error alarm display

Optional Accessories

- Spindle lifting cable (stroke: 10 mm): **21JZA295**
- Contact points for Mitutoyo's digimatic indicators (Refer to pages F-57 to F-60 for details.)
- SPC Cable:
  905338 (1 m)
  905409 (2 m)
- USB Input Tool Direct (2 m): **06AFM380F**

Note: Please separately purchase **USB-ITPAK** since there is no data output switch on the measurement instrument.

- Input Tool Series
  IT-020U (USB Keyboard Signal Conversion Type): **264-020**
  IT-007R (RS-232C Communication Conversion Type): **264-007**
- Connecting Cables for **U-WAVE-T** (160 mm): **02AZD790F**
  For foot switch: **02AZE140F**
- Digimatic Mini-Processor **DP-1VA LOGGER**: **264-505**
- Measuring stands
  (Refer to pages F-84 to F-91 for details.)

SPECIFICATIONS

ISO/JIS type ASME/ANSI/AGD type

Metric

Order No.	Range (mm)	Resolution (mm)	Maximum permissible error (mm)			Measuring force MPL (N)
			MPE$_E$*	Hysteresis MPE$_H$	Repeatability MPE$_R$	
575-121	25.4	0.01	0.02	0.02	0.01	1.8 or less

Inch / Metric

Order No.	Range	Resolution	Maximum permissible error			Measuring force MPL (N)
			MPE$_E$*	Hysteresis MPE$_H$	Repeatability MPE$_R$	
575-122	1 in / 25.4 mm	0.0005 in / 0.01 mm	±0.001 in/0.02 mm	0.001 in / 0.02 mm	0.0005 in / 0.01 mm	1.8 or less
575-123						

* Error of indication for the total measuring range

F

Mitutoyo reserves the right to change any or all aspects of any product specification, including prices, designs and service content, without notice.

DIMENSIONS

ISO / JIS Type

Unit: mm

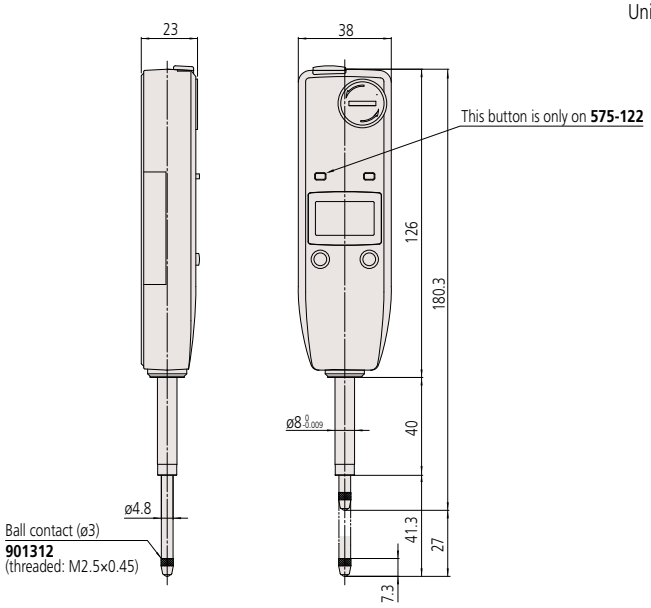

ASME / ANSI / AGD Type

Unit: in

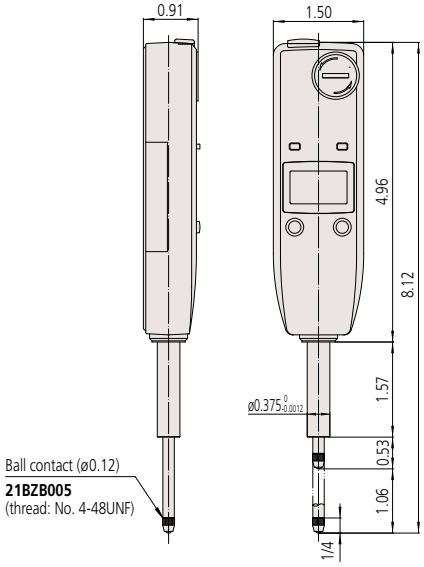

F

MeasurLink® ENABLED
Data Management Software by Mitutoyo

PROPRIETARY INSPECTION CERTIFICATE

Digimatic Indicator ID-H
SERIES 543 — High Accuracy and High Functionality Type

- A top-level digital indicator that supports high accuracy and multi-functional measurement.
- Take advantage of its high accuracy backed up by 0.0005 mm/0.00002 inch inch resolution, remote control functionality via a handheld controller (or an RS-232C interface) and easy runout measurements with the well-established analog bar display.
- Functionality meets the needs of diverse measurement applications.

Tolerance judgment

OK NG



Analog bar display



Resolution switching



- Measuring maximum value, minimum value and runout (MAX - MIN)

Maximum value/minimum value measurement



Difference/runout measurement



Example: Indicator traces between points <A> to <D>
Difference (or Total Runout) is displayed as <A>. Dimensions <B> (maximum value) and <C> (minimum value) can be retrieved from memory with a simple key sequence or using the remote control (optional).

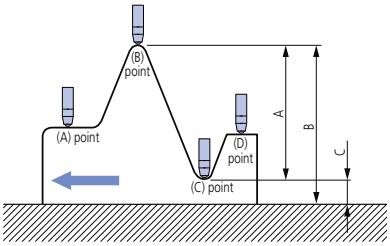

- With the optional remote controller, operations such as zero-setting and presetting can be made without touching the indicator body, thereby avoiding disturbance to the set-up.
- An advanced, remote control system can be implemented with the built-in RS-232C interface and a PC.
- Equipped with a data output port that enables incorporation into measurement networking and statistical process control systems. (Refer to page A-3)



Remote controller (optional)



543-561



543-563

Technical Data

- Display: 7-digit LCD, sign, and analog bar with 2-color backlight
- Power supply: 5.9 V DC (via AC adapter) **06AGZ369***
* To denote your AC power cable add the following suffixes to the order No.: **JA** for UL/CSA and PSE, **D** for CEE, **DC** for CCC, **E** for BS, **K** for KC, **No suffix** is required for JIS/100 V
- Positional detection method: Photoelectric-type reflection linear encoder
- Maximum response speed: 1000 mm/s
- Lifting lever: **21EAA426** (standard accessory)

Optional Accessories

- Remote controller: **21EZA099**
- Lifting
  Lifting cable: **21JZA295** (stroke 30 mm)
  Lifting knob: **21EZA101**
- SPC Cable:
  936937 (1 m)
  965014 (2 m)
- USB Input Tool Direct (2 m): **06AFM380D**
- Input Tool Series
  IT-020U (USB Keyboard Signal Conversion Type): **264-020**
  IT-007R (RS-232C Communication Conversion Type): **264-007**
- Connecting Cables for **U-WAVE-T** (160 mm): **02AZD790D**
  For foot switch: **02AZE140D**
- RS-232C Connecting cable (2 m): **21EAA131**
- Lug-on-center back:
  101040 (ISO/JIS type)
  101306 (ASME/ANSI/AGD type)
- Contact points for Mitutoyo's digimatic indicators (Refer to pages F-57 to F-60 for details.)
- Digimatic Mini-Processor **DP-1VA LOGGER**: **264-505**
- Granite comparator stands (Refer to page F-88 for details.)
- Comparator stands (Refer to page F-90 for details.)

Comparator stand
215-505-10





Remote controller

Lifting cable



F

Mitutoyo reserves the right to change any or all aspects of any product specification, including prices, designs and service content, without notice.

SPECIFICATIONS

Metric

Order No.*1	Range (mm)	Resolution (mm)	Maximum permissible error (mm)			Measuring force MPL (N)	Net mass (g)
			MPE$_E$*2	Hysteresis MPE$_H$	Repeatability MPE$_R$		
543-561	30.4	0.0005/ 0.001 (selectable)	0.0015	0.0015	0.001	2.0 or less	290
543-563	60.9		0.0025	0.0025		2.5 or less	305

Inch / Metric

ISO/JIS type ASME/ANSI/AGD type

Order No.*1	Range	Resolution	Maximum permissible error			Measuring force MPL (N)	Net mass (g)
			MPE$_E$*2	Hysteresis MPE$_H$	Repeatability MPE$_R$		
543-562	1.2 in /30.4 mm	0.00002/ 0.00005/ 0.0001 in, 0.0005/ 0.001 mm (selectable)	±0.00006 in/ 0.0015 mm	0.00006 in/ 0.0015 mm	0.00004 in/ 0.001 mm	2.0 or less	300
543-564	2.4 in /60.9 mm		±0.0001 in/ 0.0025 mm	0.0001 in/ 0.0025 mm		2.5 or less	

*1 To denote your AC power cable add the following suffixes to the order No.: **A** for UL/CSA, **D** for CEE, **DC** for CCC, **E** for BS, **K** for KC, **No suffix** is required for JIS/100 V

*2 Error of indication for the total measuring range

Note 1: The indicator can output SPC (Digimatic) data consisting of up to 6 digits in full. If the data consists of 7 digits the first digit is not output (example: 123.4565 mm is output as 23.4565 mm).

Note 2: Regarding origin setting, refer to "Origin Setting of Digimatic Indicators" on page F-25.

Note 3: The orientation for use can be from vertical (contact point pointing downward) to horizontal (spindle in horizontal orientation).

DIMENSIONS

ISO/JIS Type

Unit: mm

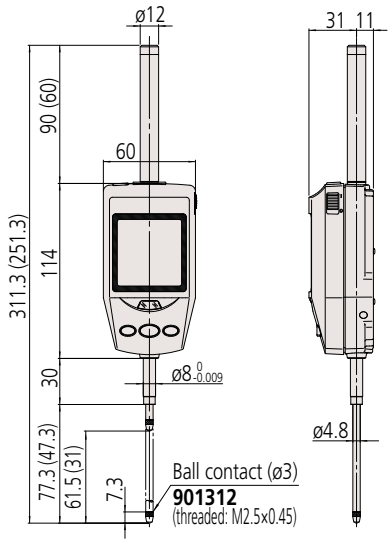

Note: ( ) = **543-561**

ASME/ANSI/AGD Type

Unit: in

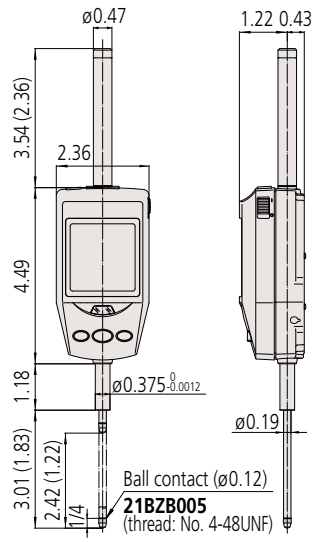

Note: ( ) = **543-562**

F

MeasurLink® ENABLED Data Management Software by Mitutoyo

ABSOLUTE™

PROPRIETARY INSPECTION CERTIFICATE

High-performance ABS Digimatic Indicator ID-F SERIES 543 — with Back-lit LCD Screen

- Supports bidirectional communication between the **ID-F** and the computer, enabling data output to a computer and setting of various functions of **ID-F** from a computer.
- The face can be rotated 330° to maintain the ease of use and readability of the characters and the bar even when the **ID-F** is used horizontally or at an angle.



543-851

543-853

- GO/±NG judgment function: If a judgment result shows an out of tolerance condition, the display backlighting changes from green to red.

Green indication for GO judgment



Red indication for ±NG judgment



- An analog bar indicator has been integrated to make upper/lower limit and turnover point reading more comfortable.
- The ABS (absolute) scale restores the last origin position* automatically when the indicator is turned on, and realizes high reliability by eliminating over-speed errors.
- Easy-to-read large LCD readout with the height of the characters has been increased from 8.5 mm with the previous model to 11 mm (about 1.5 times as much).
- External power supply type: an AC adapter is a standard accessory. Does not require battery replacement.
- The maximum resolution is 0.5 µm (0.0005 mm). With a indication error corresponding to 0.0025 mm, this indicator can be used in high-precision applications.
- Equipped with a data output port that enables incorporation into measurement networking and statistical process control systems. (Refer to page A-3)

* Refer to "Origin Setting of Digimatic Indicators" on page F-25.

SPECIFICATIONS

Metric

Order No.	Range (mm)	Resolution (mm)	Resolution switching (mm)	Maximum permissible error MPE (mm)			Response speed	Measuring force MPL (N)	Power supply	Net mass (g)
				MPE$_E$*	Hysteresis MPE$_H$	Repeatability MPE$_R$				
543-851	25.4	0.0005	0.0005/ 0.001/ 0.01	0.0025	0.002	0.002	Unlimited	1.8 or less	AC adapter (5.9 V)	240
543-853	50.8			0.004				2.3 or less		330
543-857	50.8			0.003						

Inch/Metric

ISO/JIS type ASME/ANSI/AGD type

Order No.	Range	Resolution	Resolution switching	Maximum permissible error MPE			Response speed	Measuring force MPL (N)	Power supply	Net mass (g)
				MPE$_E$*	Hysteresis MPE$_H$	Repeatability MPE$_R$				
543-852	1 in/ 25.4 mm	0.00002 in/ 0.0005 mm	0.00002/ 0.00005/ 0.0001/ 0.0005/ 0.001 in 0.005/ 0.001/ 0.01 mm	±0.0001 in/ 0.0025 mm	0.00008 in/ 0.002 mm	0.00008 in/ 0.002 mm	Unlimited	1.8 or less	AC adapter (5.9 V)	240
543-854	2 in/ 50.8 mm			±0.00016 in/ 0.004 mm				2.3 or less		330
543-858	2 in/ 50.8 mm			±0.00012 in/ 0.003 mm						

* Error of indication for the total measuring range (MPE$_E$)
Note: Measures precisely Max., Min., and TIR (amplitude (Max - Min) values. (Peak detection speed: 500 times/s)

Technical Data

- Display: 7-digit LCD, sign, and analog bar with 2-color backlight
- Power supply: 5.9 V (via AC adapter) **06AGZ369***
- * To denote your AC power cable add the following suffixes to the order No.: **JA** for UL/CSA and PSE, **D** for CEE, **DC** for CCC, **E** for BS, **K** for KC
- Lifting lever: **21EAA426** (standard accessory)

Functions

- Peak detection (MAX/MIN)
- Runout range measurement (MAX - MIN)
- Zero-setting (INC system)
- Presetting (ABS system)
- Measuring direction switching
- Tolerance judgment
- Resolution switching
- Simple calculation f(x) =Ax
- Analog resolution selection
- Data hold (when not connected to an external device)
- Function Lock
- Calibration schedule warning
- Data output
- Display rotation (330°)
- Error alarm display

Optional Accessories

- Lifting knob:
  21EZA197 (25.4 mm/1 inch type)
  21EZA200 (50.8 mm/2 inch type)
- Auxiliary spindle spring:
  02ACA571 (25.4 mm/1 inch type)
  02ACA773 (50.8 mm/2 inch type)
- SPC cable:
  06AGL011 (1 m)
  06AGL021 (2 m)
- USB Input Tool Direct (2 m): **06AGQ001F**
- Measurement data collection software
  USB-ITPAK V3.0: **06AGR543**
- Input Tool Series
  IT-020U (USB Keyboard Signal Conversion Type): **264-020**
  IT-007R (RS-232C Communication Conversion Type): **264-007**
- Connecting Cables for **U-WAVE-T** (160 mm): **02AZG011**
  For foot switch: **02AZG021**
- Contact points for Mitutoyo's digimatic indicators*1
- Interchangeable backs for SERIES 2 models*2
- Digimatic Mini-Processor **DP-1VA LOGGER**: **264-505**
- Measuring stands*3

*1 Refer to pages F-57 to F-60 for details.
*2 Refer to page F-61 for details.
*3 Refer to pages F-84 to F-91 for details.

Mitutoyo reserves the right to change any or all aspects of any product specification, including prices, designs and service content, without notice.

DIMENSIONS

ISO / JIS Type

Unit: mm

543-851

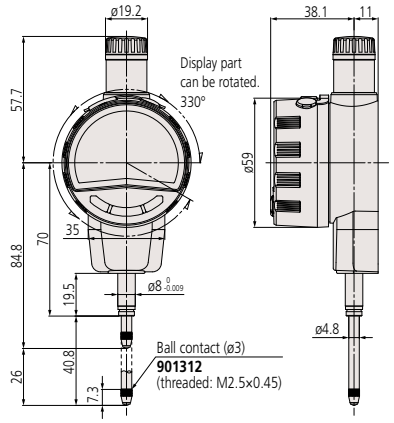

543-853, 543-857

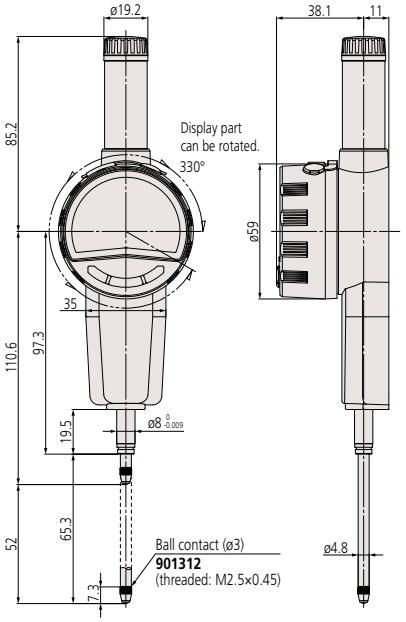

ASME / ANSI / AGD Type

Unit: in

543-852

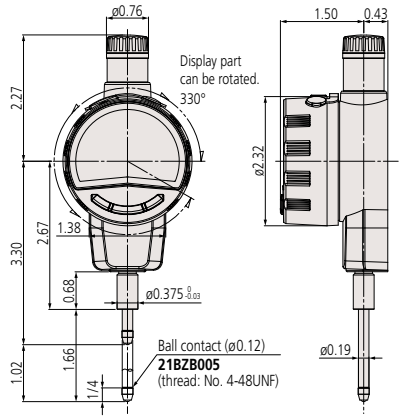

543-854, 543-858

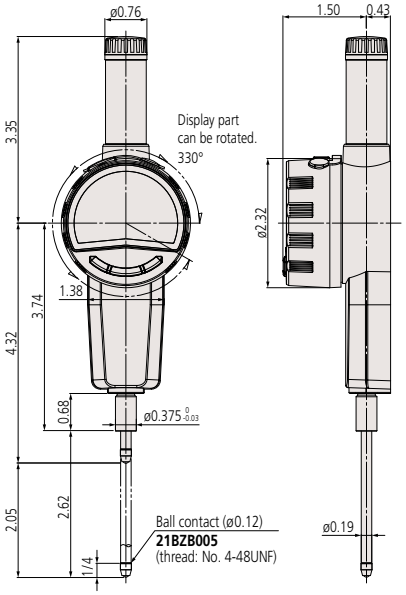

F

Supplemental information on Digimatic Indicators

Origin setting of Digimatic Indicators



Repeatability in the range of 0.2 mm from the lowest rest point is not guaranteed for Digimatic indicators. When setting the origin or presetting a specific value, be sure to lift the spindle at least 0.2 mm from the lowest rest point.

EC Counter
SERIES 542 — Low-cost, Modular Type Display Unit

- –NG, OK and +NG tolerance judgment results can be displayed.
- Can be set to produce either tolerance judgment output or Digimatic output.
- Small size (96×48 mm) which conforms to DIN standards.



542-007

MeasurLink® ENABLED
Data Management Software by Mitutoyo

Functions

- Preset
- Tolerance judgment (3 steps)

SPECIFICATIONS

Order No.		542-007*
Resolution ( ) indicates maximum display range		0.01 mm (±9999.99)/0.0005 in (±99.9995 in)/0.001 in (±999.999 in) 0.001 mm (±9999.999)/0.00005 in (±9.99995 in)/0.0001 in (±99.999 in) [automatic setting by gage]
Tolerance judgment display		LED display (3 steps: Amber, Green, Red)
External output (switching type)	Tolerance judgment output	–NG, OK, +NG (open-collector)
	Data output	Digimatic output
Control input		External PRESET, external HOLD
Operation temperature range		0 to 40 °C (RH 20 to 80%, no condensation)
Storage temperature range		–10 to 50 °C (RH 20 to 80%, no condensation)
External dimensions		96 (W) ×48 (H) ×84.6 (D) mm
Power Supply		AC adapter: **12BAR954** AC cable: **12BAK729** (Japan), **12BAK730** (U.S.), **12BAK731** (EU), **12BAK734** (UK), **12BAK732** (China), **12BAK733** (Korea)
Standard Accessories		AC adapter, AC cable, rubber feet
Mass		220 g

* To denote your AC power cable add the following suffixes to the order No.: **A** for UL/CSA, **D** for CEE, **DC** for CCC, **E** for BS, **K** for KC, C and **No suffix** are required for PSE.

DIMENSIONS

Unit: mm

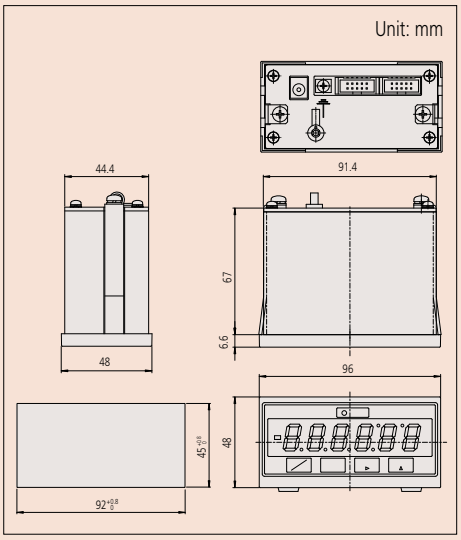

Mitutoyo reserves the right to change any or all aspects of any product specification, including prices, designs and service content, without notice.

Feature icons

Icon	Feature description
	Continuous scale
	Balanced scale
	Reverse reading type, Suitable for depth and step measurement.
	One revolution type for easy and error-free reading
	Double scale spacing type, easy-on-the-eyes
	Shockproof
	Waterproof (IP63)
	Waterproof (IP64)
	With damper at top rest point
	With damper at lowest rest point
	Jeweled bearing
	Peak retaining
	Dustproof
	With coaxial revolution counter
	Back Plunger
	Adjustable hand

Note: Mitutoyo produces ASME-compatible products.
Contact us for details.

Dial Indicators

Mitutoyo's dial indicators have long been used by many of our customers. In full recognition of their needs, we have devoted ourselves to the research and development necessary to produce high-quality and high-accuracy dial indicators. Due to the recent re-acknowledgement of the importance of measurement technologies, the demands on dial indicators are many and varied: installation in measuring jigs, mounting in countless types of precision equipment, etc. We offer numerous models with various types of dial faces, measuring ranges, graduation styles and environmental resistance ratings. The stems, which ensure the fixture reliability, and the spindles, which are the basis of accuracy, have excellent resistance against harsh use thanks to the hardened stainless steel construction. 0.01 mm resolution dial indicators have a main gear made of stainless steel with high resistance to wear and deformation. 0.001 mm graduation dial indicators employ a sector gear made of a special alloy in order to further increase the resistance to wear. Many models employ an O-ring to ensure airtightness between the outer frame and the bezel in order to prevent water or oil penetration from the front.
Mitutoyo's dial indicators are manufactured and inspected according to JIS B 7503:2017. (Inspection orientation: vertical)
Important factors in choosing a dial indicator: the size (bezel diameter), resolution (graduation) and measuring range. Use the table on the right to help choose a suitable model for your application.

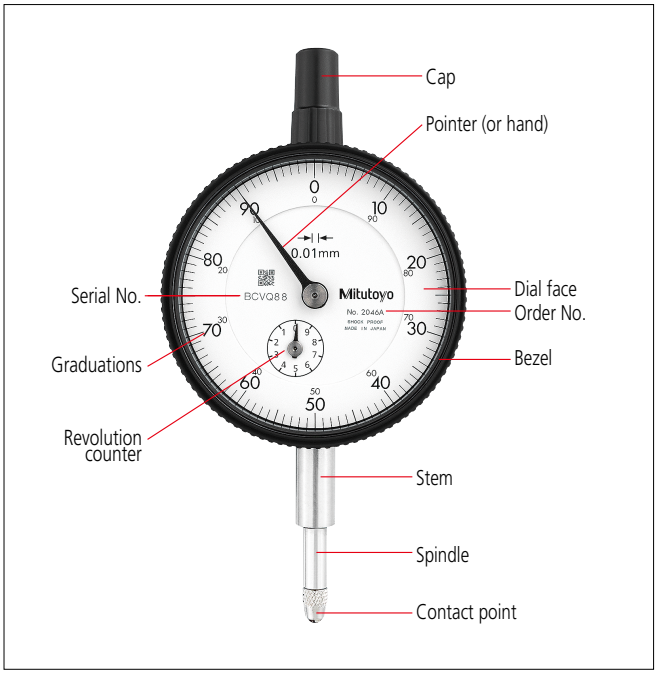

Parts of a dial indicator

F

FEATURES: A Series (SERIES 2, 3, 4)

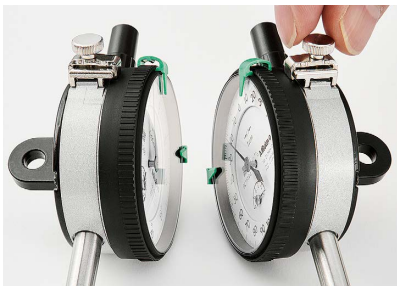

- No through screw-holes on the frame for high oil- and dust-resistance. The bezel clamp (optional) can be attached either to the right or left side.
- Improved Impact- and oil-resistant materials are employed in the bezel. Easier reading is due to the improved shape of the crystal face.

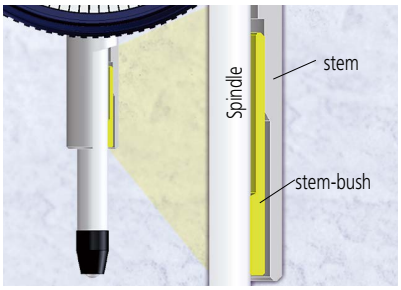

- Revolutionary stem-bush design for trouble-free stem clamping (longer clamping range; maximum tightening torque at the clamping point with M5 screw: 150 N-cm).



- The spindle lifting lever (optional: **21EZA198**) can be attached to either the right or left side providing high operability and smooth movement. This lever can be easily installed and removed.



- Limit hand <optional> (1) can be moved without interfering with the bezel clamp <optional> (2).

- Application of anti-stain and anti-reflective coating improves scale visibility.

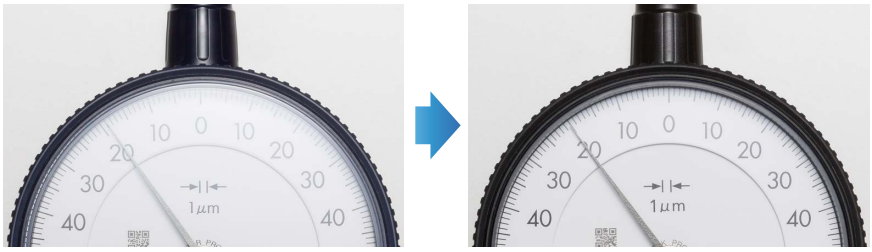

<Conventional model> **<New model>**

Mitutoyo reserves the right to change any or all aspects of any product specification, including prices, designs and service content, without notice.

SERIES 2 — Standard Type, 0.01 mm Graduation

- Standard 0.01 mm graduation dial gages having a bezel with an outside diameter of 57 mm.
- The bezel clamp and lifting lever (optional) can be attached to either the right or left side. These parts can be easily installed and removed without tools.
- Watertight assembly of bezel and crystal as well as the use of an O-ring prevents water or oil penetration.
- The stem and spindle are made of high-strength quench-hardened stainless steel suitable for heavy-duty use.
- A carbide contact point is used.
- The grand gear is made of stainless steel with high resistance to wear and deformation.
- Application of an anti-reflective and hard surface coating improves scale visibility along with scratch and chemical resistance.



2046A

Continuous scale

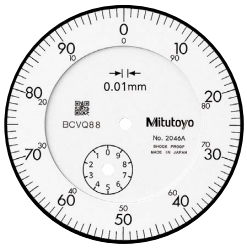

Graduation: 0.01 mm, Measuring range: 10 mm

2046A
With damper at top rest point

2046A-09
Shockproof

Balanced scale

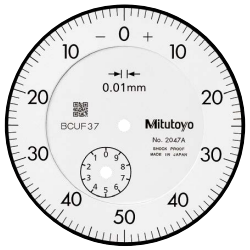

Graduation: 0.01 mm, Measuring range: 10 mm

2047A
With damper at top rest point

Reverse reading type. Suitable for depth and step measurement.

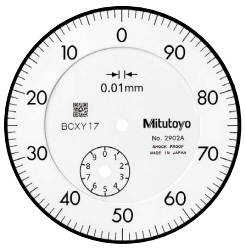

Graduation: 0.01 mm, Measuring range: 10 mm

2902A
With damper at top rest point

Continuous scale

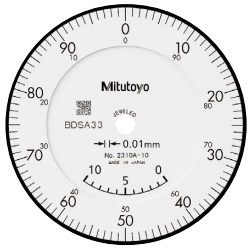

Graduation: 0.01 mm, Measuring range: 10 mm

2310A-10
With coaxial revolution counter
Jeweled bearing

Continuous scale

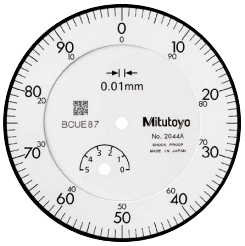

Graduation: 0.01 mm, Measuring range: 5 mm

2044A
With damper at top rest point

2044A-09
With damper at top rest point
Shockproof

Balanced scale



Graduation: 0.01 mm, Measuring range: 5 mm

2045A
With damper at top rest point

F

DIMENSIONS

ISO/JIS Type

Unit: mm

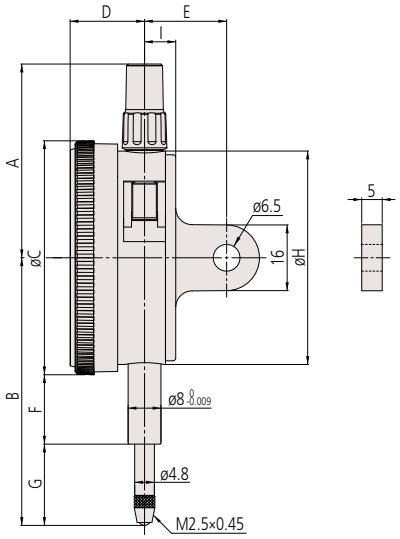

Order No.	A	B	C	D	E	F	G	H	I	Mass (g)	
										w/lug	Flat-back
2046A	47.2	65.2	57	18.1	20	16.9	19.8	52	7.6	144	135
2046A-09	47.2	65.2	57	18.1	20	16.9	19.8	52	7.6	146	137
2047A	47.2	65.2	57	18.1	20	16.9	19.8	52	7.6	144	135
2902A	47.2	65.2	57	18.1	20	16.9	19.8	52	7.6	144	135
2310A-10	47.2	65.2	57	18.1	20	16.9	19.8	52	7.6	146	137
2044A	47.2	65.2	57	18.1	20	16.9	19.8	52	7.6	145	136
2044A-09	47.2	65.2	57	18.1	20	16.9	19.8	52	7.6	147	138
2045A	47.2	65.2	57	18.1	20	16.9	19.8	52	7.6	145	136

Note: Refer to pages F-57 to F-60 for details of contact points.

Optional Accessories

• Limit hand (2 pcs.): **21AZB195**



• Bezel clamp: **21AZB148**



FEATURES

Metric

Order No.									
w/lug	Flat-back								
2046A	**2046AB**	✔					✔		
2046A-09	**2046AB-09**	✔			✔				
2047A	**2047AB**		✔				✔		
2902A	**2902AB**			✔			✔		
2310A-10	**2310AB-10**	✔						✔	✔
2044A	**2044AB**	✔					✔		
2044A-09	**2044AB-09**	✔			✔				
2045A	**2045AB**		✔				✔		

SPECIFICATIONS

Metric

ISO/JIS type

Order No.		Graduation (mm)	Range (range/rev) (mm)	Maximum permissible error (MPE) (µm)						Dial reading	Measuring force (N)
				Indication error				Hysteresis	Repeat-ability		
w/lug	Flat-back			1/10 Rev	1/2 Rev	1 Rev	Measuring range				
2046A	**2046AB**	0.01	10 (1)	5	9	10	13	3	3	±0-100	1.4 or less
2046A-09	**2046AB-09**	0.01	10 (1)	5	9	10	15	3	3	±0-100	1.4 or less
2047A	**2047AB**	0.01	10 (1)	5	9	10	13	3	3	0-50-0	1.4 or less
2902A	**2902AB**	0.01	10 (1)	5	9	10	13	3	3	100-0	1.4 or less
2310A-10	**2310AB-10**	0.01	10 (1)	5	9	10	15	3	3	±0-100	1.4 or less
2044A	**2044AB**	0.01	5 (1)	5	9	10	12	3	3	±0-100	1.4 or less
2044A-09	**2044AB-09**	0.01	5 (1)	5	9	10	12	3	3	±0-100	1.4 or less
2045A	**2045AB**	0.01	5 (1)	5	9	10	12	3	3	0-50-0	1.4 or less

Note: Completed products inspection is performed in the vertical orientation (contact point downward) and the stated accuracy is guaranteed.

Mitutoyo reserves the right to change any or all aspects of any product specification, including prices, designs and service content, without notice.

SERIES 2 — Standard Type, 0.001 mm & 0.005 mm Graduation

- Standard 0.001 mm and 0.005 mm graduation dial indicators having a bezel with an outside diameter of 57 mm.
- The bezel clamp and lifting lever (optional) can be attached to either the right or left side. These parts can be easily installed and removed without tools.
- Watertight assembly of bezel and crystal as well as the use of an O-ring prevents water or oil penetration.
- The stem and spindle are made of high-strength quench-hardened stainless steel suitable for heavy-duty use.
- A carbide contact point is used.
- A special alloy is used for the sector gears to provide improved wear resistance.
- The indicator uses jeweled bearings, providing excellent indication sensitivity and durability.
- Application of an anti-reflective and hard surface coating improves scale visibility along with scratch and chemical resistance.

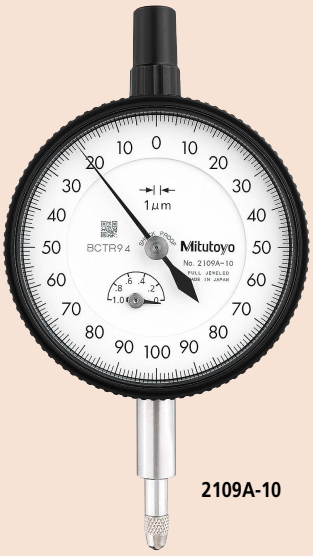

2109A-10

Balanced scale

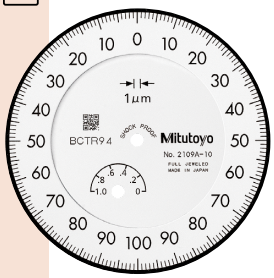

Graduation: 0.001 mm, Measuring range: 1 mm

2109A-10
Shockproof
Jeweled bearing

Continuous scale

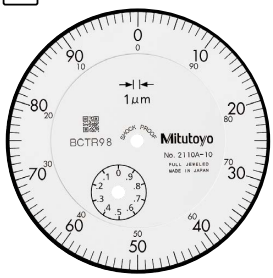

Graduation: 0.001 mm, Measuring range: 1 mm

2110A-10
Double scale spacing
Shockproof
Jeweled bearing

Balanced scale

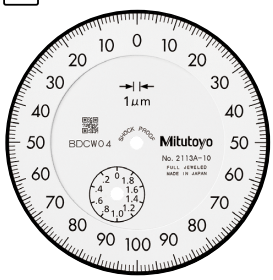

Graduation: 0.001 mm, Measuring range: 2 mm

2113A-10
Shockproof
Jeweled bearing

Continuous scale

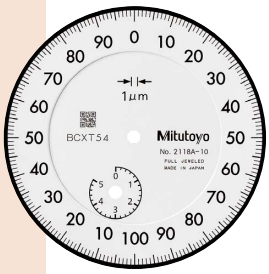

Graduation: 0.001 mm, Measuring range: 5 mm

2118A-10
Jeweled bearing

Balanced scale

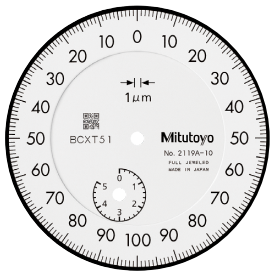

Graduation: 0.001 mm, Measuring range: 5 mm

2119A-10
Jeweled bearing

Continuous scale

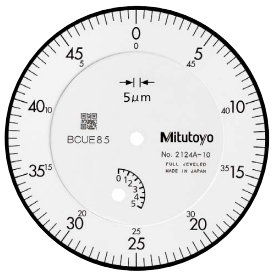

Graduation: 0.005 mm, Measuring range: 5 mm

2124A-10
Jeweled bearing

F

DIMENSIONS

ISO/JIS Type

Unit: mm

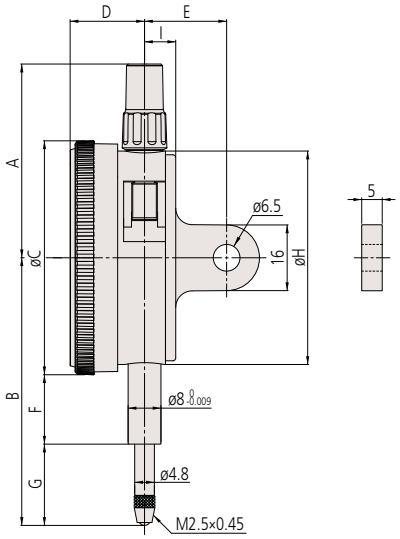

Order No.	A	B	C	D	E	F	G	H	I	Mass (g)	
										w/lug	Flat-back
2109A-10	47.2	60.5	57	18.1	20	16.9	15.1	52	7.6	148	139
2110A-10	47.2	66.5	57	18.1	20	16.9	21.1	52	7.6	149	140
2113A-10	47.2	61	57	18.1	20	16.9	15.6	52	7.6	148	139
2118A-10	47.2	60.7	57	18.1	20	16.9	15.3	52	7.6	146	137
2119A-10	47.2	60.7	57	18.1	20	16.9	15.3	52	7.6	146	137
2124A-10	47.2	60.7	57	18.1	20	16.9	15.3	52	7.6	146	137

Note: Refer to pages F-57 to F-60 for details of contact points.

Optional Accessories

• Limit hand (2 pcs.): **21AZB195**

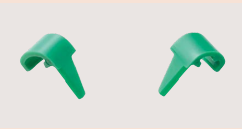

• Bezel clamp: **21AZB148**



FEATURES

Metric

Order No.								
w/lug	Flat-back							
2109A-10	**2109AB-10**		✔	✔		✔	
2110A-10	**2110AB-10**	✔		✔		✔	✔
2113A-10	**2113AB-10**		✔	✔		✔	
2118A-10	**2118AB-10**	✔				✔	
2119A-10	**2119AB-10**		✔			✔	
2124A-10	**2124AB-10**	✔				✔	

SPECIFICATIONS

Metric

ISO/JIS type

Order No.		Graduation (mm)	Range (range/rev) (mm)	Maximum permissible error (MPE) (µm)						Dial reading	Measuring force (N)
				Indication error				Hysteresis	Repeat-ability		
w/lug	Flat-back			1/10 Rev	1/2 Rev	1 Rev	Measuring range				
2109A-10	**2109AB-10**	0.001	1 (0.2)	2	3	4	5	2	0.5	0-100-0	1.5 or less
2110A-10	**2110AB-10**	0.001	1 (0.1)	2	3	4	5	2	0.5	±0-100	1.8 or less
2113A-10	**2113AB-10**	0.001	2 (0.2)	2	4	5	7	2	0.5	0-100-0	1.5 or less
2118A-10	**2118AB-10**	0.001	5 (0.2)	3.5	5	6	10	3	1	0-100-100	1.5 or less
2119A-10	**2119AB-10**	0.001	5 (0.2)	3.5	5	6	10	3	1	0-100-0	1.5 or less
2124A-10	**2124AB-10**	0.005	5 (0.5)	5	8	9	12	3	3	±0-50	1.5 or less

Note: Completed products inspection is performed in the vertical orientation (contact point downward) and the stated accuracy is guaranteed.

Mitutoyo reserves the right to change any or all aspects of any product specification, including prices, designs and service content, without notice.

SERIES 2 — Water-proof Type, 0.01 mm & 0.001 mm Graduation

- Water-proof type dial indicators having a bezel with an outside diameter of 57 mm.
- O-rings and rubber bellows are used to prevent water and oil penetration.
- The bezel clamp can be attached to either the right or left side. These parts can be easily installed and removed without tools.
- The stem and spindle are made of high-strength quench-hardened stainless steel suitable for heavy-duty use.
- A carbide contact point is used.
- Application of an anti-reflective and hard surface coating improves scale visibility along with scratch and chemical resistance.



2046A-60

Continuous scale

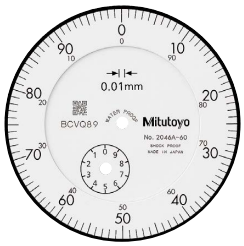

Graduation: 0.01 mm,
Measuring range: 10 mm

2046A-60
Waterproof
With damper at top rest point

Continuous scale

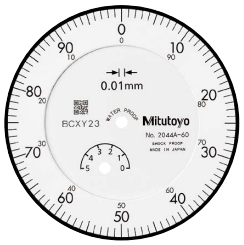

Graduation: 0.01 mm,
Measuring range: 5 mm

2044A-60
Waterproof
With damper at top rest point

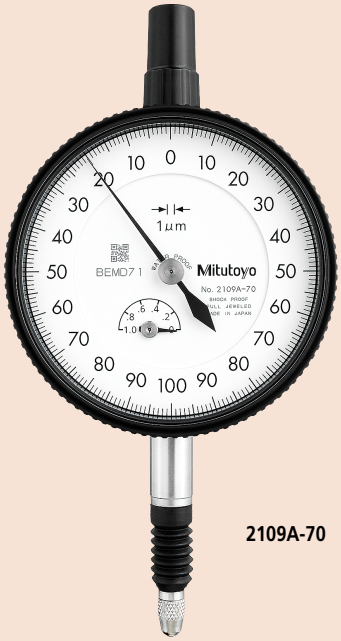

2109A-70

Balanced scale

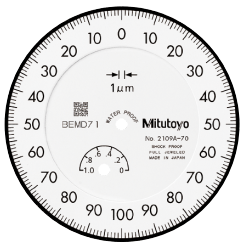

Graduation: 0.001 mm,
Measuring range: 1 mm

2109A-70
Waterproof
Shockproof
Jeweled bearing

Continuous scale

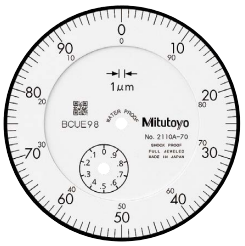

Graduation: 0.001 mm,
Measuring range: 1 mm

2110A-70
Waterproof
Double scale spacing
Shockproof
Jeweled bearing

F

Mitutoyo reserves the right to change any or all aspects of any product specification, including prices, designs and service content, without notice.

DIMENSIONS

ISO/JIS Type

Unit: mm

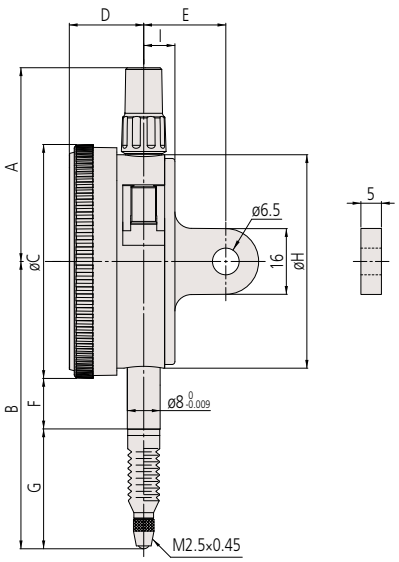

Order No.	A	B	C	D	E	F	G	H	I	Mass (g)	
										w/lug	Flat-back
2046A-60	47.2	74.7	57	18.1	20	12.3	33.9	52	7.6	147	138
2044A-60	47.2	70	57	18.1	20	12.3	29.2	52	7.6	147	138
2109A-70	47.2	65.3	57	18.1	20	12.3	24.5	52	7.6	149	140
2110A-70	47.2	67.5	57	18.1	20	12.3	26.7	52	7.6	150	141

Note: Refer to pages F-57 to F-60 for details of contact points.

Optional Accessories

• Limit hand (2 pcs.): **21AZB195**



• Bezel clamp: **21AZB148** (for metric type)
21RZA065 (for inch type)



21AZB148

FEATURES

Metric

Order No.								
w/lug	Flat-back							
2046A-60	**2046AB-60**	✔			✔	✔		
2044A-60	**2044AB-60**	✔			✔	✔		
2109A-70	**2109AB-70**		✔	✔	✔		✔	
2110A-70	**2110AB-70**	✔		✔	✔		✔	✔

SPECIFICATIONS

Metric

ISO/JIS type

Order No.		Graduation (mm)	Range (range/rev) (mm)	Maximum permissible error (MPE) (µm)						Dial reading	Measuring force (N)
				Indication error				Hysteresis	Repeat-ability		
w/lug	Flat-back			1/10 Rev	1/2 Rev	1 Rev	Measuring range				
2046A-60	**2046AB-60**	0.01	10 (1)	5	9	10	13	3	3	±0-100	2.5 or less
2044A-60	**2044AB-60**	0.01	5 (1)	5	9	10	12	3	3	±0-100	2.5 or less
2109A-70	**2109AB-70**	0.001	1 (0.2)	2	3	4	5	2	0.5	0-100-0	2.0 or less
2110A-70	**2110AB-70**	0.001	1 (0.1)	2	3	4	5	2	0.5	±0-100	2.0 or less

Note: Completed products inspection is performed in the vertical orientation (contact point downward) and the stated accuracy is guaranteed.

Mitutoyo reserves the right to change any or all aspects of any product specification, including prices, designs and service content, without notice.

SERIES 2 — Standard Type, Inch Reading

SPECIFICATIONS

Inch

ANSI/AGD type

Order No. w/lug	Order No. Flat-back	Graduation (in)	Range (range/rev) (in)	Accuracy (in) First 1 Rev/2.5 Rev/10 Rev	Accuracy (in) Retrace	Repeatability (in)	Dial reading	Measuring force (N)
2414A	**2414AB**	0.001	0.5 (0.1)	±0.001/±0.001/±0.001	0.0002	±0.0002	±0-100	1.8 or less
2415A	**2415AB**	0.001	0.5 (0.1)	±0.001/±0.001/±0.001	0.0002	±0.0002	0-50-0	1.8 or less
2914A	**2914AB**	0.001	0.5 (0.1)	±0.001/±0.001/±0.001	0.0002	±0.0002	100-0	1.8 or less
2506A	**2506AB**	0.0005	0.125 (0.05)	±0.0005/±0.0005/—	0.00016	±0.0001	±0-50	1.8 or less
2507A	**2507AB**	0.0005	0.125 (0.05)	±0.0005/±0.0005/—	0.00016	±0.0001	0-25-0	1.8 or less
2514A	**2514AB**	0.0005	0.5 (0.05)	±0.0005/±0.0005/±0.0015	0.00016	±0.0001	±0-50	1.8 or less
2922A	**2922AB**	0.0005	0.125 (0.05)	±0.0005/±0.0005/—	0.00016	±0.0001	0-25-0	1.8 or less
2356A-10	**2356AB-10**	0.0001	0.25 (0.01)	±0.0002/±0.0002/±0.0003/±0.0004 (First 20rev)/±0.0005 (Over 20rev)	0.0001	±0.00003	0-10	2.0 or less
2358A-10	**2358AB-10**	0.0001	0.5 (0.01)	±0.0002/±0.0002/±0.0003/±0.0004 (First 20rev)/±0.0008 (Over 20rev)	0.00015	±0.00003	0-10	2.0 or less
2802A-10	**2802AB-10**	0.0001	0.025 (0.01)	±0.0001/±0.0001/—	0.0001	±0.00003	0-10	2.0 or less
2803A-10	**2803AB-10**	0.0001	0.025 (0.01)	±0.0001/±0.0001/—	0.0001	±0.00003	0-5-0	2.0 or less
2804A-10	**2804AB-10**	0.0001	0.05 (0.01)	±0.0001/±0.0001/±0.0002	0.0001	±0.00003	0-10	2.0 or less
2805A-10	**2805AB-10**	0.0001	0.05 (0.01)	±0.0001/±0.0001/±0.0002	0.0001	±0.00003	0-5-0	2.0 or less
2905A-10	**2905AB-10**	0.0001	0.05 (0.01)	±0.0001/±0.0001/±0.0002	0.0001	±0.00003	10-0	2.0 or less
2923A-10	**2923AB-10**	0.0001	0.05 (0.01)	±0.0001/±0.0001/±0.0002	0.0001	±0.00003	0-5-0	2.0 or less

Note: Completed products inspection is performed in the vertical orientation (contact point downward) and the stated accuracy is guaranteed.

FEATURES

Inch

Order No. w/lug	Order No. Flat-back						
2414A	**2414AB**				✔		✔
2415A	**2415AB**					✔	✔
2914A	**2914AB**		✔				✔
2506A	**2506AB**				✔		✔
2507A	**2507AB**					✔	✔
2514A	**2514AB**				✔		✔
2922A	**2922AB**					✔	✔
2356A-10	**2356AB-10**			✔	✔		✔
2358A-10	**2358AB-10**			✔	✔		✔
2802A-10	**2802AB-10**	✔		✔	✔		
2803A-10	**2803AB-10**	✔		✔		✔	
2804A-10	**2804AB-10**	✔		✔	✔		
2805A-10	**2805AB-10**	✔		✔		✔	
2905A-10	**2905AB-10**	✔	✔	✔			
2923A-10	**2923AB-10**	✔		✔		✔	

Mitutoyo reserves the right to change any or all aspects of any product specification, including prices, designs and service content, without notice.

DIMENSIONS

ANSI/AGD Type

Unit: in

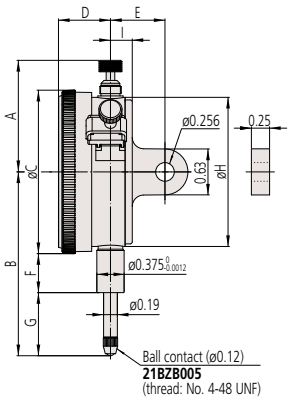

Order No.	A	B	C	D	E	F	G	H	I	Mass (g)	
										w/lug	Flat-back
2414A	1.53	2.52	2.24	0.71	3/4	0.54	0.87	2.05	0.30	164	139
2415A	1.53	2.52	2.24	0.71	3/4	0.54	0.87	2.05	0.30	164	139
2914A	1.53	2.52	2.24	0.71	3/4	0.54	0.87	2.05	0.30	164	139
2506A	1.86	2.14	2.24	0.71	3/4	0.54	0.48	2.05	0.30	164	139
2507A	1.86	2.14	2.24	0.71	3/4	0.54	0.48	2.05	0.30	164	139
2514A	1.53	2.52	2.24	0.71	3/4	0.54	0.87	2.05	0.30	164	139
2922A	1.86	2.14	2.24	0.71	3/4	0.54	0.48	2.05	0.30	164	139
2356A-10	1.86	2.25	2.24	0.71	3/4	0.54	0.59	2.05	0.30	163	138
2358A-10	1.53	2.50	2.24	0.71	3/4	0.54	0.85	2.05	0.30	164	139
2802A-10	1.86	2.02	2.24	0.71	3/4	0.54	0.37	2.05	0.30	164	139
2803A-10	1.86	2.02	2.24	0.71	3/4	0.54	0.37	2.05	0.30	164	139
2804A-10	1.86	2.04	2.24	0.71	3/4	0.54	0.38	2.05	0.30	166	141
2805A-10	1.86	2.04	2.24	0.71	3/4	0.54	0.38	2.05	0.30	166	141
2905A-10	1.86	2.04	2.24	0.71	3/4	0.54	0.38	2.05	0.30	164	139
2923A-10	1.86	2.04	2.24	0.71	3/4	0.54	0.38	2.05	0.30	164	139

Mitutoyo reserves the right to change any or all aspects of any product specification, including prices, designs and service content, without notice.

SERIES 2 — Standard One Revolution Type for Error-free Reading

- This series has been developed to eliminate the possibility of reading errors due to miscounting multiple revolutions.
- Mitutoyo's unique shock-proof mechanism is incorporated, providing improved resistance to shock due to sudden spindle retraction caused by impact.
- The bezel clamp and lifting lever (optional) can be attached to either the right or left side. These parts can be easily installed and removed without tools.
- The stem and spindle are made of high-strength quench-hardened stainless steel suitable for heavy-duty use.
- A carbide contact point is used.
- Application of an anti-reflective and hard surface coating improves scale visibility along with scratch and chemical resistance.
- The dead zone in red indicates "accuracy not guaranteed".

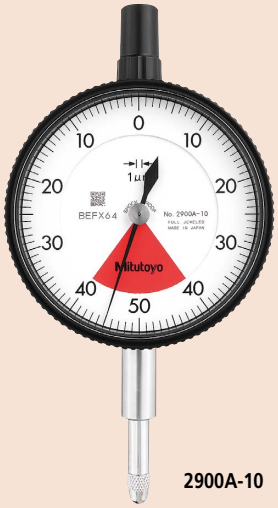

2900A-10

Balanced scale

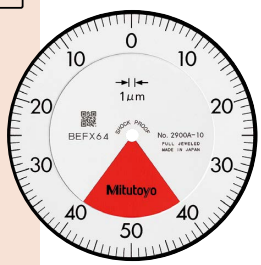

Graduation: 0.001 mm, Measuring range: 0.08 mm

2900A-10
- One revolution
- Shockproof
- Jeweled bearing

2900A-72
- One revolution
- Shockproof
- Dustproof
- Jeweled bearing

Balanced scale

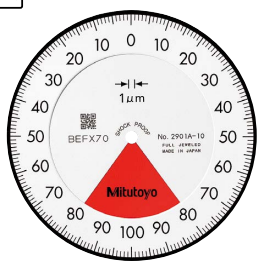

Graduation: 0.001 mm, Measuring range: 0.16 mm

2901A-10
- One revolution
- Shockproof
- Jeweled bearing

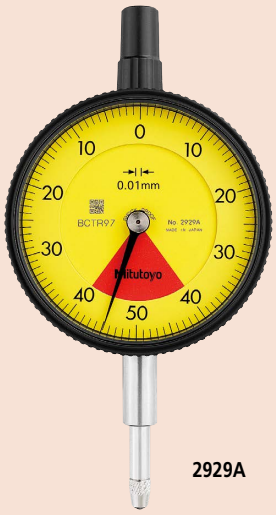

2929A

Balanced scale

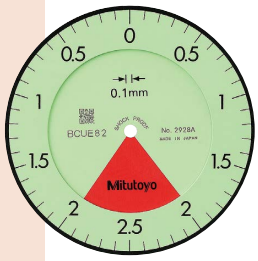

Graduation: 0.1 mm, Measuring range: 4 mm

2928A
- One revolution
- Shockproof

Balanced scale

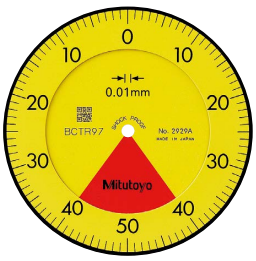

Graduation: 0.01 mm, Measuring range: 0.8 mm

2929A
- One revolution
- Shockproof

2929A-62
- One revolution
- Shockproof
- Dustproof

Balanced scale

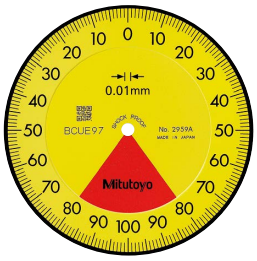

Graduation: 0.01 mm, Measuring range: 1.6 mm

2959A
- One revolution
- Shockproof

One revolution type Back Plunger dial gages are also available. (Refer to pages F-55 to F-56 for details.)

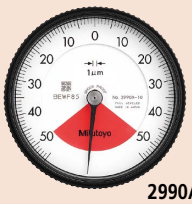

2990A-10

Mitutoyo reserves the right to change any or all aspects of any product specification, including prices, designs and service content, without notice.

DIMENSIONS

ISO/JIS Type

Unit: mm

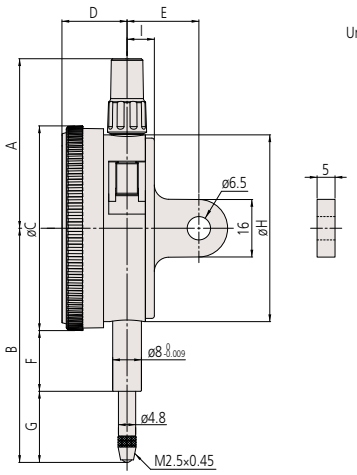

Order No.	A	B	C	D	E	F	G	H	I	Mass (g) w/lug	Mass (g) Flat-back
2928A	47.2	65.2	57	18.1	20	16.9	19.8	52	7.6	145	136
2929A	47.2	65.2	57	18.1	20	16.9	19.8	52	7.6	145	136
2929A-62	47.2	65.2	57	18.1	20	16.9	19.8	52	7.6	145	136
2959A	47.2	65.2	57	18.1	20	16.9	19.8	52	7.6	145	136
2900A-10	47.2	66	57	18.1	20	16.9	20.6	52	7.6	149	140
2900A-72	47.2	66	57	18.1	20	16.9	20.6	52	7.6	149	140
2901A-10	47.2	66.1	57	18.1	20	16.9	20.7	52	7.6	149	140

Note: Refer to pages F-57 to F-60 for details of contact points.

ANSI/AGD Type

Unit: in

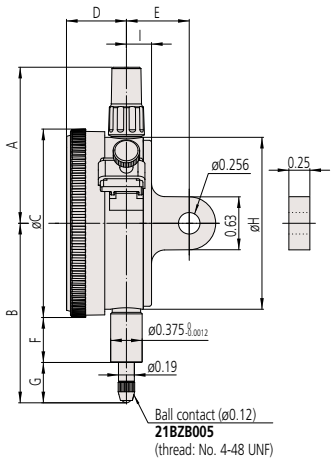

Order No.	A	B	C	D	E	F	G	H	I	Mass (g) w/lug	Mass (g) Flat-back
2909A-62	1.86	2.04	2.24	0.71	3/4	0.54	0.39	2.05	0.30	163	138
2910A-10	1.86	2.02	2.24	0.71	3/4	0.54	0.36	2.05	0.30	164	139

FEATURES

Metric

Order No. w/lug	Order No. Flat-back						
2928A	**2928AB**	✔	✔	✔			
2929A	**2929AB**	✔	✔	✔			
2929A-62	**2929AB-62**	✔	✔	✔		✔	
2959A	**2959AB**	✔	✔	✔			
2900A-10	**2900AB-10**	✔	✔	✔			✔
2900A-72	**2900AB-72**	✔	✔	✔		✔	✔
2901A-10	**2901AB-10**	✔	✔	✔			✔

Inch

Order No. w/lug	Order No. Flat-back						
2909A-62	**2909AB-62**	✔	✔	✔		✔	
2910A-10	**2910AB-10**	✔	✔	✔			✔

SPECIFICATIONS

Metric

ISO/JIS type

Order No. w/lug	Order No. Flat-back	Graduation (mm)	Range (range/rev) (mm)	Maximum permissible error (MPE) (µm) Indication error 1/10 Rev	1/2 Rev	1 Rev	Measuring range	Hysteresis	Repeatability	Dial reading	Measuring force (N)
2928A	**2928AB**	0.1	4 (5)	20	—	—	40	20	20	2-0-2	1.4 or less
2929A	**2929AB**	0.01	0.8 (1)	5	—	—	8	3	3	40-0-40	1.4 or less
2929A-62	**2929AB-62**	0.01	0.8 (1)	5	—	—	8	3	3	40-0-40	2.0 or less
2959A	**2959AB**	0.01	1.6 (2)	5	—	—	10	3	3	80-0-80	1.4 or less
2900A-10	**2900AB-10**	0.001	0.08 (0.1)	2	—	—	3	2	0.5	40-0-40	1.5 or less
2900A-72	**2900AB-72**	0.001	0.08 (0.1)	2	—	—	3	2	0.5	40-0-40	2.0 or less
2901A-10	**2901AB-10**	0.001	0.16 (0.2)	2	—	—	4	2	0.5	80-0-80	1.5 or less

Note: Completed products inspection is performed in the vertical orientation (contact point downward) and the stated accuracy is guaranteed.

Inch

ANSI/AGD type

Order No. w/lug	Order No. Flat-back	Graduation (in)	Range (range/rev) (in)	Accuracy (in) First 1 Rev/2.5 Rev/10 Rev	Retrace	Repeatability (in)	Dial reading	Measuring force (N)
2909A-62	**2909AB-62**	0.0005	0.04/0.05	±0.0005/—/—	0.00016	±0.0001	20-0-20	2.5 or less
2910A-10	**2910AB-10**	0.0001	0.008/0.01	±0.0001/—/—	0.0001	±0.00003	4-0-4	1.8 or less

Note: Completed products inspection is performed in the vertical orientation (contact point downward) and the stated accuracy is guaranteed.

Optional Accessories

- Limit hand (2 pcs.): **21AZB195**



- Bezel clamp: **21AZB148** (for metric type)
  21RZA065 (for inch type)



21AZB148

Mitutoyo reserves the right to change any or all aspects of any product specification, including prices, designs and service content, without notice.

SERIES 2 — Standard One Revolution Type for Error-free Reading, Water-proof Type

- This series has been developed to eliminate the possibility of reading errors due to miscounting multiple revolutions.
- Mitutoyo's unique shock-proof mechanism is incorporated, providing improved resistance to shock due to sudden spindle retraction caused by impact.
- The bezel clamp and lifting lever (optional) can be attached to either the right or left side. These parts can be easily installed and removed without tools.
- The stem and spindle are made of high-strength quench-hardened stainless steel suitable for heavy-duty use.
- A carbide contact point is used.
- Application of an anti-reflective and hard surface coating improves scale visibility along with scratch and chemical resistance.
- The dead zone in red indicates "accuracy not guaranteed".

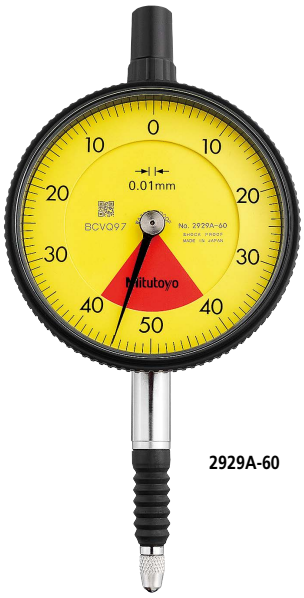

2929A-60

Balanced scale

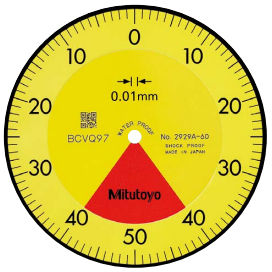

Graduation: 0.01 mm,
Measuring range: 0.8 mm

2929A-60
One revolution
Shockproof
Waterproof

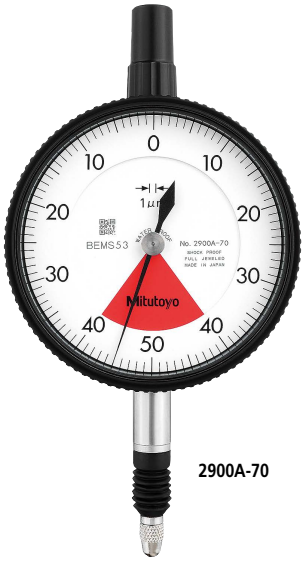

2900A-70

Balanced scale



Graduation: 0.001 mm,
Measuring range: 0.08 mm

2900A-70
One revolution
Shockproof
Waterproof
Jeweled bearing

F

Mitutoyo reserves the right to change any or all aspects of any product specification, including prices, designs and service content, without notice.

DIMENSIONS

ISO/JIS Type

Unit: mm

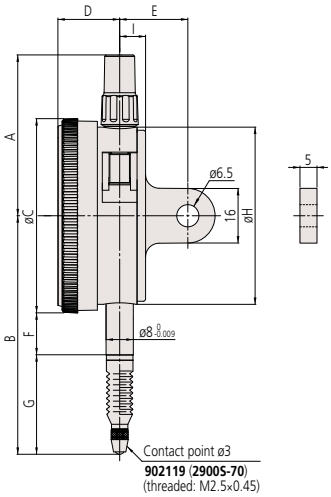

Order No.	A	B	C	D	E	F	G	H	I	Mass (g) w/lug	Mass (g) Flat-back
2929A-60	47.2	70	57	18.1	20	12.3	29.2	52	7.6	146	137
2900A-70	47.2	67	57	18.1	20	12.3	26.2	52	7.6	150	141

Note: Refer to pages F-57 to F-60 for details of contact points.

ANSI/AGD Type

Unit: in

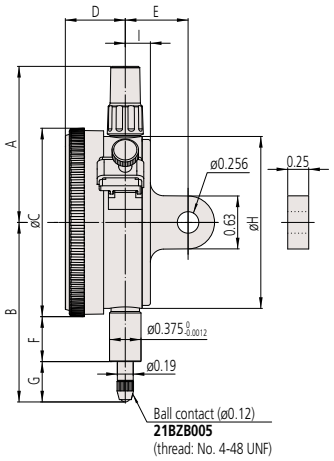

Order No.	A	B	C	D	E	F	G	H	I	Mass (g) w/lug	Mass (g) Flat-back
2910A-72	1.86	2.02	2.24	0.71	3/4	0.54	0.36	2.05	0.30	150	141

Note: Refer to pages F-57 to F-60 for details of contact points.

FEATURES

Metric

Order No. w/lug	Order No. Flat-back						
2929A-60	**2929AB-60**	✔	✔	✔	✔		
2900A-70	**2900AB-70**	✔	✔	✔	✔		✔

Inch

Order No. w/lug	Order No. Flat-back						
2910A-72	**2910AB-72**	✔	✔	✔		✔	✔

SPECIFICATIONS

Metric

ISO/JIS type

Order No. w/lug	Order No. Flat-back	Graduation (mm)	Range (range/rev) (mm)	Maximum permissible error (MPE) (µm) Indication error 1/10 Rev	1/2 Rev	1 Rev	Measuring range	Hysteresis	Repeat-ability	Dial reading	Measuring force (N)
2929A-60	**2929AB-60**	0.01	0.8 (1)	5	—	—	8	3	3	40-0-40	2.0 or less
2900A-70	**2900AB-70**	0.001	0.08 (0.1)	2	—	—	3	2	0.5	40-0-40	2.0 or less

Note: Completed products inspection is performed in the vertical orientation (contact point downward) and the stated accuracy is guaranteed.

Inch

ANSI/AGD type

Order No. w/lug	Order No. Flat-back	Graduation (in)	Range (range/rev) (in)	Accuracy (in) First 1 Rev/2.5 Rev/10 Rev	Retrace	Repeat-ability (in)	Dial reading	Measuring force (N)
2910A-72	**2910AB-72**	0.0001	0.008/0.01	±0.0001/—/—	0.0001	±0.00003	4-0-4	2.5 or less

Note: Completed products inspection is performed in the vertical orientation (contact point downward) and the stated accuracy is guaranteed.

Optional Accessories

• Limit hand (2 pcs.): **21AZB195**



• Bezel clamp: **21AZB148** (for metric type)
21RZA065 (for inch type)



21AZB148

Mitutoyo reserves the right to change any or all aspects of any product specification, including prices, designs and service content, without notice.

SERIES 2 — Standard One Revolution Type for Error-free Reading, Lightweight Type

- This series has been developed to eliminate the possibility of reading errors due to miscounting multiple revolutions.
- Mitutoyo's unique shock-proof mechanism is incorporated, providing improved resistance to shock due to sudden spindle retraction caused by impact.
- The stem and spindle are made of high-strength quench-hardened stainless steel suitable for heavy-duty use.
- A carbide contact point is used.
- Application of an anti-reflective and hard surface coating improves scale visibility along with scratch and chemical resistance.
- Lightweight type (70 g).
- The dead zone in red indicates "accuracy not guaranteed".

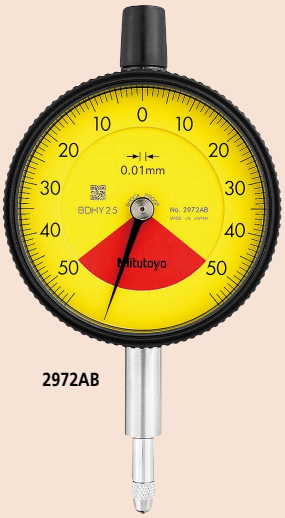

2972AB

Balanced scale

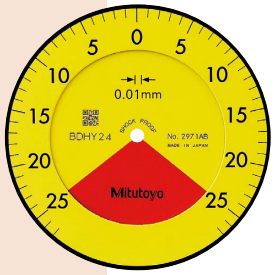

Graduation: 0.01 mm,
Measuring range: 0.5 mm

2971AB
One revolution
Shockproof
Dustproof

Balanced scale

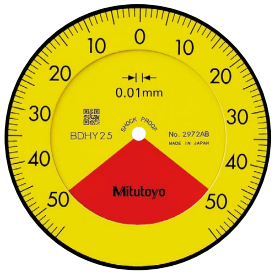

Graduation: 0.01 mm,
Measuring range: 1 mm

2972AB
One revolution
Shockproof
Dustproof

Balanced scale

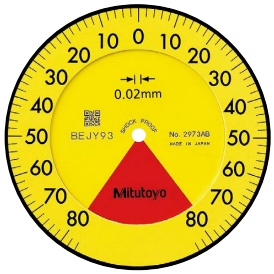

Graduation: 0.02 mm,
Measuring range: 1.6 mm

2973AB
One revolution
Shockproof
Dustproof

F

DIMENSIONS

ISO/JIS Type

Unit: mm

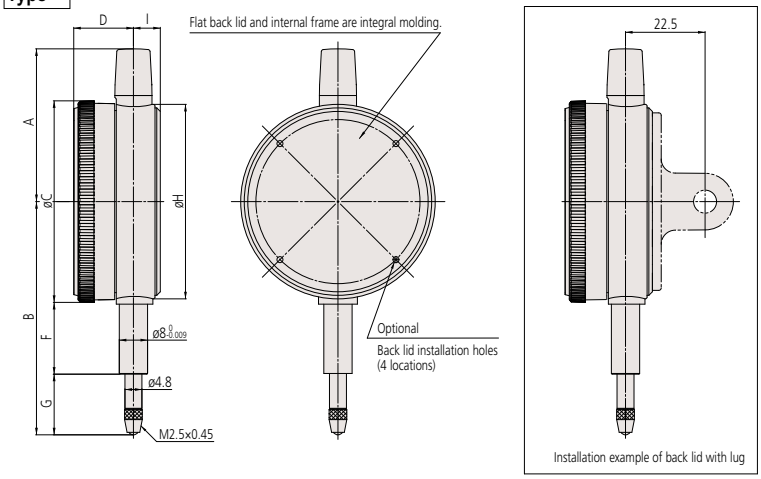

ANSI/AGD Type

Unit: in

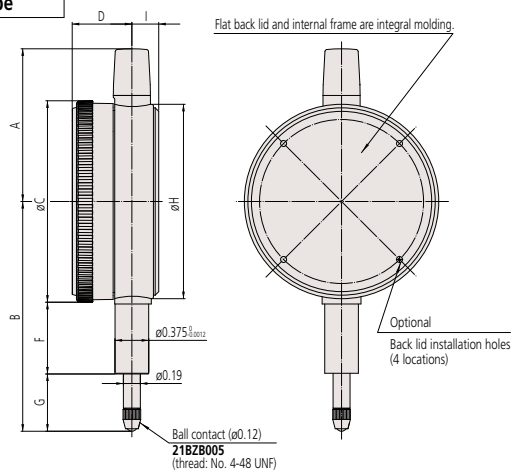

Note 1: When installing an optional back (refer to page F-61 for details) 4 retaining screws must also be obtained (**546666**: Self-tapping screw only for plastic). Do not apply a tightening torque of more than 20 N-cm in order to avoid stripping the screw threads.
Note 2: An optional lifting lever, release or bezel clamp cannot be installed.

Metric

Order No.	A	B	C	D	F	G	H	I	Mass (g)
2971AB	43.2	65.6	57	16.9	20.3	16.8	55	7.6	70
2972AB	43.2	66	57	16.9	20.3	17.2	55	7.6	
2973AB	43.2	66.3	57	16.9	20.3	17.5	55	7.6	

Inch

Order No.	A	B	C	D	F	G	H	I	Mass (g)
2976AB	1.70	2.55	2.24	0.67	0.80	0.63	2.17	0.30	70
2977AB	1.70	2.56	2.24	0.67	0.80	0.64	2.17	0.30	
2978AB	1.70	2.57	2.24	0.67	0.80	0.65	2.17	0.30	

Note: Refer to pages F-57 to F-60 for details of contact points.

FEATURES

Metric

Order No.					
w/lug	Flat-back				
—	**2971AB**	✔	✔	✔	✔
—	**2972AB**	✔	✔	✔	✔
—	**2973AB**	✔	✔	✔	✔

Inch

Order No.					
w/lug	Flat-back				
—	**2976AB**	✔	✔	✔	✔
—	**2977AB**	✔	✔	✔	✔
—	**2978AB**	✔	✔	✔	✔

SPECIFICATIONS

Metric

☐ ISO/JIS type

Order No.		Graduation (mm)	Range (range/rev) (mm)	Maximum permissible error (MPE) (µm)						Dial reading	Measuring force (N)
				Indication error				Hysteresis	Repeat-ability		
w/lug	Flat-back			1/10 Rev	1/2 Rev	1 Rev	Measuring range				
—	**2971AB**	0.01	0.5 (0.7)	5	—	—	8	3	3	25-0-25	1.4 or less
—	**2972AB**	0.01	1 (1.4)	5	—	—	8	3	3	50-0-50	1.4 or less
—	**2973AB**	0.02	1.6 (2)	8	—	—	16	6	5	80-0-80	1.4 or less

Note: Completed products inspection is performed in the vertical orientation (contact point downward) and the stated accuracy is guaranteed.

Inch

☐ ANSI/AGD type

Order No.		Graduation (in)	Range (range/rev) (in)	Accuracy (in)		Repeat-ability (in)	Dial reading	Measuring force (N)
w/lug	Flat-back			First 1 Rev/2.5 Rev/10 Rev	Retrace			
—	**2976AB**	0.0005	0.02 (0.028)	±0.0005/—/—	0.00016	±0.0001	10-0-10	1.4 or less
—	**2977AB**	0.0005	0.04 (0.055)	±0.0005/—/—	0.00016	±0.0001	20-0-20	1.4 or less
—	**2978AB**	0.001	0.06 (0.079)	±0.001/—/—	0.0002	±0.0002	30-0-30	1.4 or less

Note: Completed products inspection is performed in the vertical orientation (contact point downward) and the stated accuracy is guaranteed.

Optional Accessory

• Limit hand (2 pcs.): **21AZB195**



Mitutoyo reserves the right to change any or all aspects of any product specification, including prices, designs and service content, without notice.

SERIES 2 — Long Stroke Type

- Long stroke dial indicators with a ø57 mm bezel.
- Watertight assembly of bezel and crystal as well as the use of an O-ring prevents water or oil penetration.
- The stem and the spindle are made of high-strength quench-hardened stainless steel suitable for heavy-duty use.
- A carbide contact point is employed.
- The grand gear is made of stainless steel with high resistance to wear and deformation.
- Application of an anti-reflective and hard surface coating improves scale visibility along with scratch and chemical resistance.
- The bezel clamp and lifting lever* (optional) can be attached to either the right or left side. These parts can be easily installed and removed without any tools.

* These cannot be used on water-proof models and models with a measuring range of 30 mm.

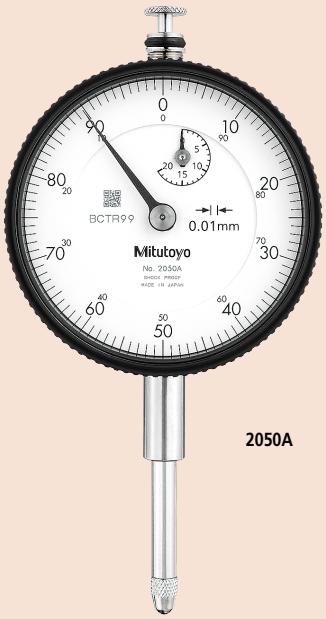

2050A

Continuous scale

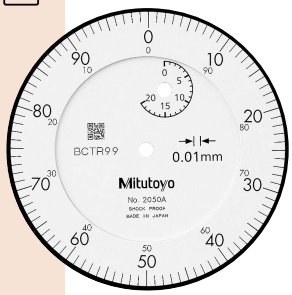

Graduation: 0.01 mm, Measuring range: 20 mm

2050A
With damper at lowest rest point

2050A-19
Shockproof
Jeweled bearing
With damper at lowest rest point

2050A-60
Waterproof

Continuous scale

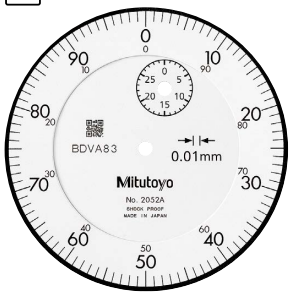

Graduation: 0.01 mm, Measuring range: 30 mm

2052A
With damper at lowest rest point

2052A-19
Shockproof
Jeweled bearing
With damper at lowest rest point

Continuous scale

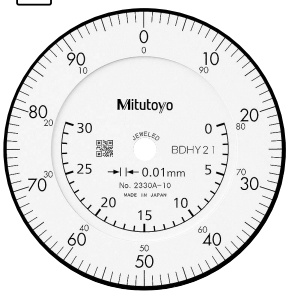

Graduation: 0.01 mm, Measuring range: 30 mm

2330A-10
With coaxial revolution counter
With damper at lowest rest point
Jeweled bearing

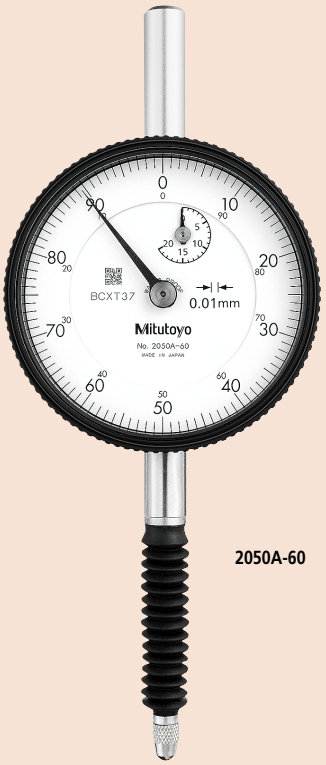

2050A-60

Continuous scale

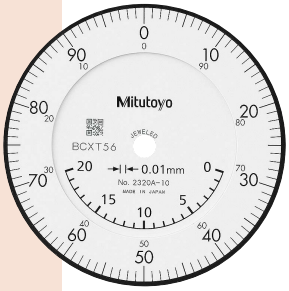

Graduation: 0.01 mm, Measuring range: 20 mm

2320A-10
With coaxial revolution counter
With damper at lowest rest point
Jeweled bearing

Reverse reading

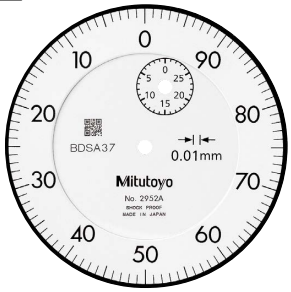

Graduation: 0.01 mm, Measuring range: 30 mm

2952A
With damper at lowest rest point

F

Optional Accessories

- Limit hand (2 pcs.): **21AZB195**
- Bezel clamp: **21AZB148** (for metric type)
  21RZA065 (for inch type)
  21RZA067 (for **2424A(B)-19**)

FEATURES

Metric

Order No. w/lug	Order No. Flat-back								
2050A	**2050AB**	✔					✔		
2050A-60	**2050AB-60**	✔				✔			
2050A-19	**2050AB-19**	✔			✔		✔	✔	
2320A-10	**2320AB-10**	✔					✔	✔	✔
2052A	**2052AB**	✔					✔		
2052A-19	**2052AB-19**	✔			✔		✔	✔	
2330A-10	**2330AB-10**	✔					✔	✔	✔
2952A	**2952AB**			✔			✔		

Inch

Order No. w/lug	Order No. Flat-back							
2416A	**2416AB**	✔						
2416A-06	**2416AB-06**	✔						
2416A-10	**2416AB-10**	✔				✔		
2417A	**2417AB**		✔					
2424A-19	**2424AB-19**	✔		✔		✔		✔
2776A	**2776AB**	✔						
2904A	**2904AB**				✔			

SPECIFICATIONS

Metric

ISO/JIS type

Order No. w/lug	Order No. Flat-back	Graduation (mm)	Range (range/rev) (mm)	Maximum permissible error (MPE) (µm) Indication error 1/10 Rev	1/2 Rev	1 Rev	Measuring range	Hysteresis	Repeat-ability	Dial reading	Measuring force (N)
2050A	**2050AB**	0.01	20 (1)	8	10	15	20	5	4	±0-100	2.0 or less
2050A-60*	**2050AB-60***	0.01	20 (1)	8	10	15	20	5	4	±0-100	2.5 or less
2050A-19	**2050AB-19**	0.01	20 (1)	8	10	15	20	5	4	±0-100	2.0 or less
2320A-10	**2320AB-10**	0.01	20 (1)	8	10	15	20	5	4	±0-100	2.0 or less
2052A	**2052AB**	0.01	30 (1)	10	12	15	25	7	5	±0-100	2.5 or less
2052A-19	**2052AB-19**	0.01	30 (1)	10	12	15	25	7	5	±0-100	2.5 or less
2330A-10	**2330AB-10**	0.01	30 (1)	10	12	15	25	7	5	±0-100	2.5 or less
2952A	**2952AB**	0.01	30 (1)	10	12	15	25	7	5	100-0	2.5 or less

* **2050A-60** and **2050AB-60** are water-proof types that use a rubber bellows to cover the spindle.
Note that the outer diameter of the bellows (ø9.5) is larger than that of the stem (ø8).
Note: Completed products inspection is performed in the vertical orientation (contact point downward) and the stated accuracy is guaranteed.

Inch

ANSI/AGD type

Order No. w/lug	Order No. Flat-back	Graduation (in)	Range (range/rev) (in)	Accuracy (in) First 1 Rev/2.5 Rev/10 Rev	Retrace	Repeat-ability (in)	Dial reading	Measuring force (N)
2416A	**2416AB**	0.001	1 (0.1)	±0.001/±0.001/±0.002	0.0002	±0.0002	±0-100	1.8 or less
2416A-06	**2416AB-06**	0.001	1 (0.1)	±0.001/±0.001/±0.002	0.0002	±0.0002	±0-100	1.8 or less
2416A-10	**2416AB-10**	0.001	1 (0.1)	±0.001/±0.001/±0.002	0.0002	±0.0002	±0-100	1.8 or less
2417A	**2417AB**	0.001	1 (0.1)	±0.001/±0.001/±0.002	0.0002	±0.0002	0-50-0	1.8 or less
2424A-19	**2424AB-19**	0.001	2 (0.1)	±0.001/±0.001/±0.002/±0.003 (First 20 Rev)	0.00033	±0.0002	±0-100	2.5 or less
2776A	**2776AB**	0.0005	1 (0.05)	±0.0005/±0.0005/±0.0015/±0.002 (First 20 Rev)	0.0002	±0.0001	±0-50	2.5 or less
2904A	**2904AB**	0.001	1 (0.1)	±0.001/±0.001/±0.002	0.0002	±0.0002	100-0	1.8 or less

Note: Completed products inspection is performed in the vertical orientation (contact point downward) and the stated accuracy is guaranteed.

DIMENSIONS

Unit: mm

ISO/JIS Type

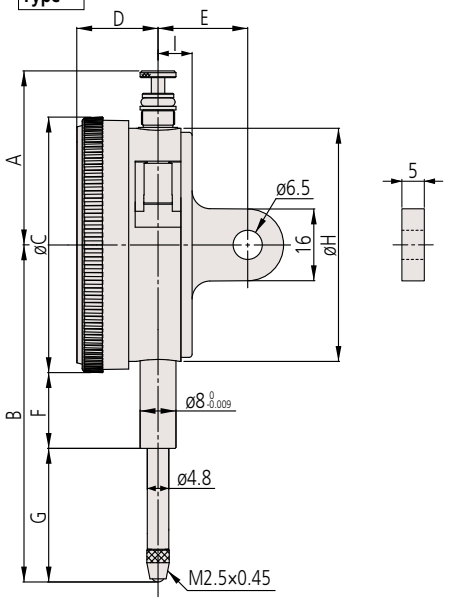

2050A-60

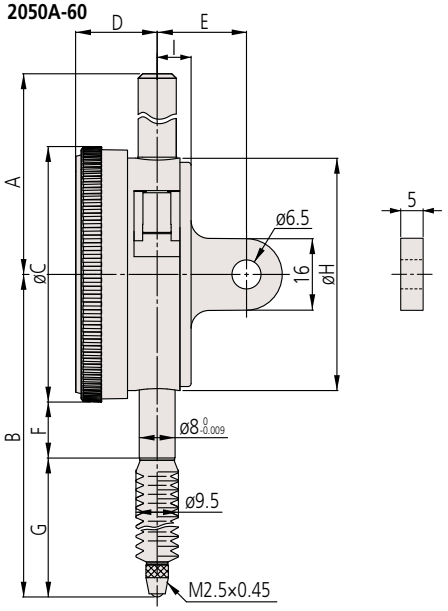

Unit: in

ANSI/AGD Type

2424A-19

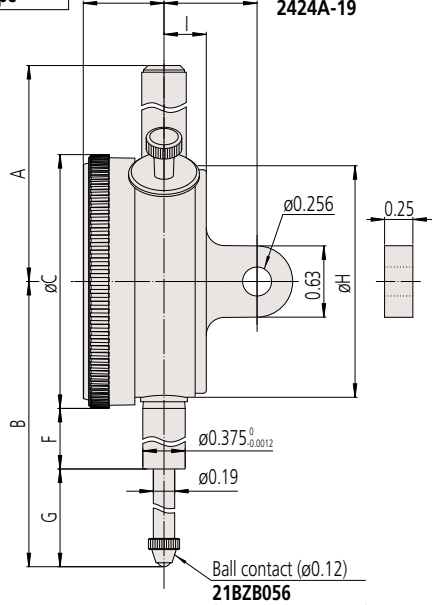

Order No.	A	B	C	D	E	F	G	H	I	Mass (g) w/lug	Mass (g) Flat-back
2050A	38.8	75.2	57	18.1	20	16.9	29.8	52	7.6	149	140
2050A-60	58.2	87.2	57	18.1	20	12.3	31.1	52	7.6	155	146
2050A-19	38.8	75.2	57	18.1	20	16.9	29.8	52	7.6	149	140
2320A-10	38.8	75.2	57	18.1	20	16.9	29.8	52	7.6	150	141
2052A	38.8	88.7	57	18.1	20	16.9	43.3	52	7.6	152	143
2052A-19	38.8	88.7	57	18.1	20	16.9	43.3	52	7.6	152	143
2330A-10	38.8	88.7	57	18.1	20	16.9	43.3	52	7.6	153	144
2952A	38.8	88.7	57	18.1	20	16.9	43.3	52	7.6	152	143

Note: Refer to pages F-57 to F-60 for details of contact points.

Order No.	A	B	C	D	E	F	G	H	I	Mass (g) w/lug	Mass (g) Flat-back
2416A	1.53	3.02	2.24	0.71	3/4	0.54	1.37	2.05	0.30	164	139
2416A-06	1.53	3.02	2.24	0.71	3/4	0.54	1.37	2.05	0.30	164	139
2416A-10	1.53	3.02	2.24	0.71	3/4	0.54	1.37	2.05	0.30	164	139
2417A	1.53	3.02	2.24	0.71	3/4	0.54	1.37	2.05	0.30	164	139
2424A-19	4.65	5.61	2.24	0.71	5/6	2.14	2.35	2.05	0.37	248	239
2776A	1.53	3.02	2.24	0.71	3/4	0.54	1.37	2.05	0.30	164	139
2904A	1.53	3.02	2.24	0.71	3/4	0.54	1.37	2.05	0.30	164	139

Note: Refer to pages F-57 to F-60 for details of contact points.

Mitutoyo reserves the right to change any or all aspects of any product specification, including prices, designs and service content, without notice.

SERIES 1 — Compact Type, Extra Small Diameter

- Compact dial indicators with bezel diameters of 31 or 36 mm for restricted-space applications in gaging jigs.

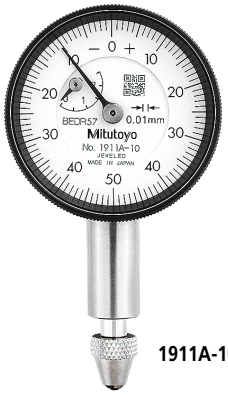

1911A-10

Balanced scale

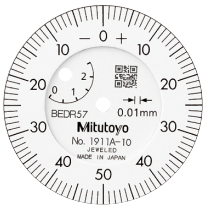

Graduation: 0.01 mm,
Measuring range: 2.5 mm

1911A-10
Jeweled bearing

Balanced scale

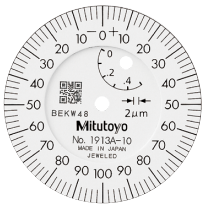

Graduation: 0.02 mm,
Measuring range: 0.5 mm

1913A-10
Jeweled bearing

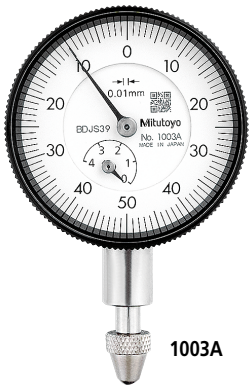

1003A

Balanced scale



Graduation: 0.01 mm,
Measuring range: 4 mm

1003A

F

DIMENSIONS

ISO/JIS Type

1911A-10/1913A-10 **1003A**

ANSI/AGD Type

1921A-10/1923A-10/1925A-10

Unit: mm Unit: in

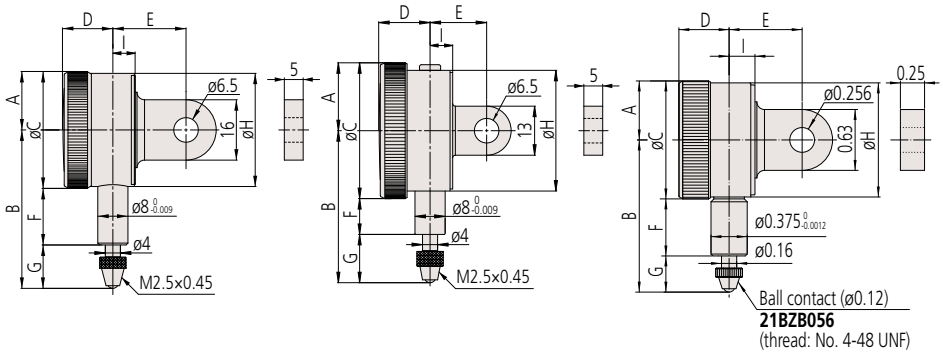

Metric Unit: mm

Order No.	A	B	C	D	E	F	G	H	I	Mass (g) w/lug	Mass (g) Flat-back
1911A-10	15.5	42	31	13.6	19.4	15.1	11.5	30	6	55	51
1913A-10	15.5	39.5	31	13.6	19.4	15.1	8.9	30	6	55	51
1003A	18	40.3	36	13.5	15	9.5	12.8	32	6	51	48

Inch Unit: in

Order No.	A	B	C	D	E	F	G	H	I	Mass (g) w/lug	Mass (g) Flat-back
1921A-10	0.61	1.58	1.22	0.52	3/4	0.59	0.37	1.18	0.27	55	51
1923A-10	0.61	1.51	1.22	0.52	3/4	0.59	0.31	1.18	0.27	55	51
1925A-10	0.61	1.48	1.22	0.52	3/4	0.59	0.28	1.18	0.27	55	51

Note 1: Limit hands, bezel clamps and lifting levers cannot be installed.
Note 2: The shoulder on a contact point (standard accessory) acts as a stop to prevent spindle overrun that may otherwise damage the indicator. For this reason, if you need to install an optional contact point with an outside diameter smaller than 7 mm, use a washer (with outside diameter of at least 7 mm, inside diameter of 3 mm, and thickness of approx. 0.5 mm) placed between the contact point and the spindle.
Note 3: Being fixed by only two retaining screws, the back cannot be rotated by 90° to change the orientation of the lug.

SPECIFICATIONS

Metric ☐ ISO/JIS type

Order No. w/lug	Order No. Flat-back	Graduation (mm)	Range (range/rev) (mm)	Maximum permissible error (MPE) (µm) Indication error 1/10 Rev	1/2 Rev	1 Rev	Measuring range	Hysteresis	Repeatability	Dial reading	Measuring force (N)
1911A-10	**1911AB-10**	0.01	2.5 (1)	8	9	10	12	4	3	0-50-0	1.8 or less
1913A-10	**1913AB-10**	0.002	0.5 (0.2)	2.5	4	5	6	2.5	1	0-100-0	1.8 or less
1003A	**1003AB**	0.01	4 (1)	8	10	11	13	4	3	0-50-0	1.4 or less

Note: Completed products inspection is performed in the vertical orientation (contact point downward) and the stated accuracy is guaranteed.

Inch ☐ ANSI/AGD type

Order No. w/lug	Order No. Flat-back	Graduation (in)	Range (range/rev) (in)	Accuracy (in) First 1 Rev/2.5 Rev/10 Rev	Retrace	Repeatability (in)	Dial reading	Measuring force (N)
1921A-10	**1921AB-10**	0.001	0.1 (0.04)	±0.001/±0.001/—	0.0002	±0.0002	0-20-0	1.8 or less
1923A-10	**1923AB-10**	0.0005	0.05 (0.02)	±0.0005/±0.005/—	0.00016	±0.0001	0-10-0	1.8 or less
1925A-10	**1925AB-10**	0.0001	0.025 (0.01)	±0.0002/±0.0002/—	0.0001	±0.00003	0-5-0	1.8 or less

Note: Completed products inspection is performed in the vertical orientation (contact point downward) and the stated accuracy is guaranteed.

Mitutoyo reserves the right to change any or all aspects of any product specification, including prices, designs and service content, without notice.

SERIES 1 — Compact Type, Small Diameter

- Compact dial indicators ideal for restricted-space applications in gaging jigs.
- Watertight assembly of bezel and crystal as well as the use of an O-ring prevents water or oil penetration.
- The stem and spindle are made of high-strength quench-hardened stainless steel suitable for heavy-duty use.
- A carbide contact point is used.
- Application of an anti-reflective and hard surface coating improves scale visibility along with scratch and chemical resistance.

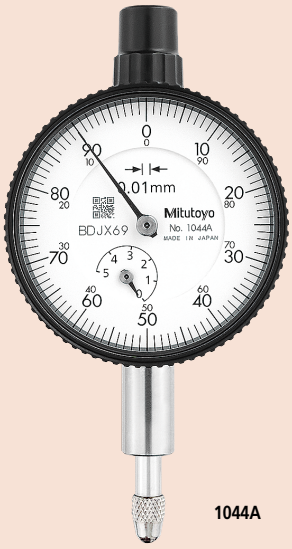

1044A

Continuous scale

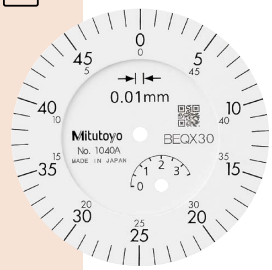

Graduation: 0.01 mm, Measuring range: 3.5 mm

1040A

Double scale spacing

Balanced scale

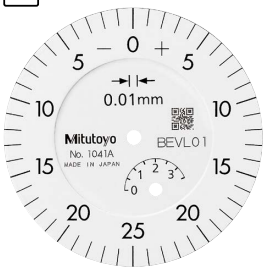

Graduation: 0.01 mm, Measuring range: 3.5 mm

1041A

Double scale spacing

Continuous scale

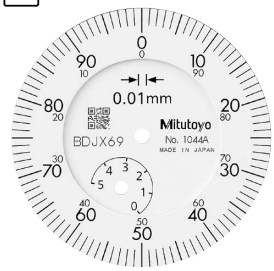

Graduation: 0.01 mm, Measuring range: 5 mm

1044A

1044A-15

Jeweled bearing

Balanced scale



Graduation: 0.01 mm, Measuring range: 5 mm

1045A

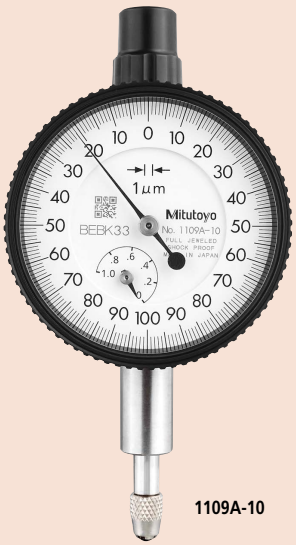

1109A-10

Balanced scale

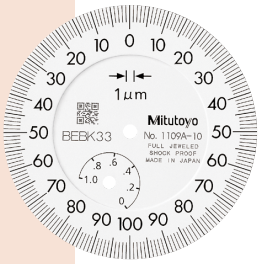

Graduation: 0.001 mm, Measuring range: 1 mm

1109A-10

Shockproof

Jeweled bearing

Balanced scale



Graduation: 0.002 mm, Measuring range: 1 mm

1013A-10

Shockproof

Jeweled bearing

Continuous scale

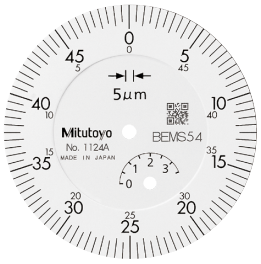

Graduation: 0.005 mm, Measuring range: 3.5 mm

1124A

F

Dial Indicators



1044A-60

Continuous scale



Graduation: 0.01 mm,
Measuring range: 5 mm

1044A-60

Waterproof

Optional Accessories

• Limit hand (2 pcs.): **21AAB363**



• Bezel clamp: **21RZA149**

SPECIFICATIONS

Metric

ISO/JIS type

Order No. w/lug	Order No. Flat-back	Graduation (mm)	Range (range/rev) (mm)	Maximum permissible error (MPE) (µm) Indication error 1/10 Rev	1/2 Rev	1 Rev	Measuring range	Hysteresis	Repeatability	Dial reading	Measuring force (N)
1013A-10	**1013AB-10**	0.002	1 (0.2)	2.5	4	5	6	2.5	1	0-100-0	1.5 or less
1040A	**1040AB**	0.01	3.5 (0.5)	8	10	11	13	4	3	±0-50	1.4 or less
1041A	**1041AB**	0.01	3.5 (0.5)	8	10	11	13	4	3	0-25-0	1.4 or less
1044A	**1044AB**	0.01	5 (1)	8	10	11	13	4	3	±0-100	1.4 or less
1044A-15	**1044AB-15**	0.01	5 (1)	8	10	11	13	4	3	±0-100	0.4 or less*
1044A-60	**1044AB-60**	0.01	5 (1)	8	10	11	13	4	3	±0-100	2.0 or less
1045A	**1045AB**	0.01	5 (1)	8	10	11	13	4	3	0-50-0	1.4 or less
1109A-10	**1109AB-10**	0.001	1 (0.2)	2.5	3.5	4.5	5	2	1	0-100-0	1.5 or less
1124A	**1124AB**	0.005	3.5 (0.5)	6	9	10	12	3.5	3	±0-50	1.4 or less

* For low measuring force type, use in the vertical orientation.
Note: Completed products inspection is performed in the vertical orientation (contact point downward) and the stated accuracy is guaranteed.

FEATURES

Metric

Order No. w/lug	Order No. Flat-back						
1013A-10	**1013AB-10**		✔		✔	✔	
1040A	**1040AB**	✔		✔			
1041A	**1041AB**		✔	✔			
1044A	**1044AB**	✔					
1044A-15	**1044AB-15**	✔				✔	
1044A-60	**1044AB-60**	✔					✔
1045A	**1045AB**		✔				
1109A-10	**1109AB-10**		✔		✔	✔	
1124A	**1124AB**	✔					

Inch

ANSI/AGD type

Order No. w/lug	Order No. Flat-back	Graduation (in)	Range (range/rev) (in)	Accuracy (in) First 1 Rev/2.5 Rev/10 Rev	Retrace	Repeatability (in)	Dial reading	Measuring force (N)
1410A	**1410AB**	0.001	0.25 (0.1)	±0.001/±0.001/—	0.0002	±0.0002	0-100	1.4 or less
1411A	**1411AB**	0.001	0.25 (0.1)	±0.001/±0.001/—	0.0002	±0.0002	0-50-0	1.4 or less
1410A-10	**1410AB-10**	0.001	0.25 (0.1)	±0.001/±0.001/—	0.0002	±0.0002	0-100	1.4 or less
1780A	**1780AB**	0.001	0.125 (0.05)	±0.001/±0.001/—	0.0002	±0.0002	0-50	1.4 or less
1781A	**1781AB**	0.001	0.125 (0.05)	±0.001/±0.001/—	0.0002	±0.0002	0-25-0	1.4 or less
1506A	**1506AB**	0.0005	0.125 (0.05)	±0.0005/±0.0005/—	0.00016	±0.0001	0-50	1.4 or less
1507A	**1507AB**	0.0005	0.125 (0.05)	±0.0005/±0.0005/—	0.00016	±0.0001	0-25-0	1.4 or less
1670A	**1670AB**	0.0005	0.1 (0.04)	±0.0005/±0.0005/—	0.00016	±0.0001	0-40	1.4 or less
1671A	**1671AB**	0.0005	0.1 (0.04)	±0.0005/±0.0005/—	0.00016	±0.0001	0-20-0	1.4 or less
1802A-10	**1802AB-10**	0.0001	0.025 (0.01)	±0.0001/±0.0001/—	0.0001	±0.00003	0-10	1.5 or less
1803A-10	**1803AB-10**	0.0001	0.025 (0.01)	±0.0001/±0.0001/—	0.0001	±0.00003	0-5-0	1.5 or less

Note: Completed products inspection is performed in the vertical orientation (contact point downward) and the stated accuracy is guaranteed.

Inch

Order No. w/lug	Order No. Flat-back				
1410A	**1410AB**	✔			
1411A	**1411AB**		✔		
1410A-10	**1410AB-10**	✔		✔	
1780A	**1780AB**	✔			
1781A	**1781AB**		✔		
1506A	**1506AB**	✔			
1507A	**1507AB**		✔		
1670A	**1670AB**	✔			
1671A	**1671AB**		✔		
1802A-10	**1802AB-10**	✔		✔	✔
1803A-10	**1803AB-10**		✔	✔	✔

DIMENSIONS

ANSI/AGD Type

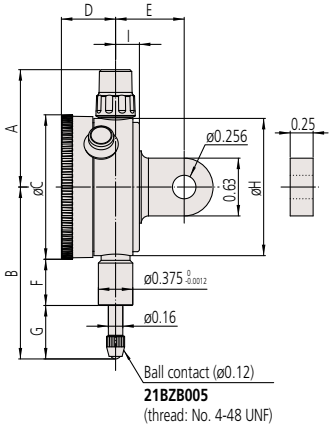

Unit: in

Order No.	A	B	C	D	E	F	G	H	I
1410A	1.28	1.87	1.57	0.59	3/4	0.50	0.58	1.50	0.26
1411A	1.28	1.87	1.57	0.59	3/4	0.50	0.58	1.50	0.26
1410A-10	1.28	1.87	1.57	0.59	3/4	0.50	0.58	1.50	0.26
1780A	1.28	1.74	1.57	0.59	3/4	0.50	0.44	1.50	0.26
1781A	1.28	1.74	1.57	0.59	3/4	0.50	0.44	1.50	0.26
1506A	1.28	1.74	1.57	0.59	3/4	0.50	0.44	1.50	0.26
1507A	1.28	1.74	1.57	0.59	3/4	0.50	0.44	1.50	0.26
1670A	1.28	1.71	1.57	0.59	3/4	0.50	0.42	1.50	0.26
1671A	1.28	1.71	1.57	0.59	3/4	0.50	0.42	1.50	0.26
1802A-10	1.28	1.63	1.57	0.59	3/4	0.50	0.33	1.50	0.26
1803A-10	1.28	1.63	1.57	0.59	3/4	0.49	0.33	1.50	0.26

Note: Refer to pages F-57 to F-60 for details of contact points.

ISO/JIS Type

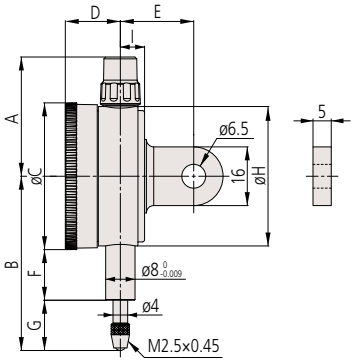

Unit: mm

Order No.	A	B	C	D	E	F	G	H	I
1013A-10	32.5	49	40	15	20	13.8	15.2	38	6.6
1040A	32.5	46	40	15	20	13.8	12.2	38	6.6
1041A	32.5	46	40	15	20	13.8	12.2	38	6.6
1044A	32.5	47.5	40	15	20	13.8	13.7	38	6.6
1044A-15*3	32.5	47.5	40	15	20	13.8	13.7	38	6.6
1044A-60	32.5	57	40	15	20	12.2	24.8	38	6.6
1045A	32.5	47.5	40	15	20	13.8	13.7	38	6.6
1109A-10	32.5	49	40	15	20	13.8	15.2	38	6.6
1124A	32.5	46	40	15	20	13.8	12.2	38	6.6

*3 Use in the vertical orientation (contact point downward) for the low measuring force model.
Note: Refer to pages F-57 to F-60 for details of contact points.

F

Mitutoyo reserves the right to change any or all aspects of any product specification, including prices, designs and service content, without notice.

SERIES 1 — Compact One Revolution Type for Error-free Reading

- This series has been developed to eliminate the possibility of reading errors due to miscounting multiple revolutions.
- Compact dial indicators ideal for restricted-space applications in gaging jigs.
- Mitutoyo's unique shock-proof mechanism is incorporated, providing improved resistance to shock due to sudden spindle retraction caused by impact.
- The dead zone in red indicates "accuracy not guaranteed".
- One revolution type Back Plunger dial gages are also available. (Refer to pages F-55 to F-56 for details)

One revolution type Back plunger dial gages are also available. (Refer to pages F-55 to F-56 for details.)



2990A-10



1929A

Balanced scale



Graduation: 0.01 mm,
Measuring range: 1 mm

1929A
- One revolution
- Shockproof

1929A-62
- One revolution
- Shockproof
- Dustproof

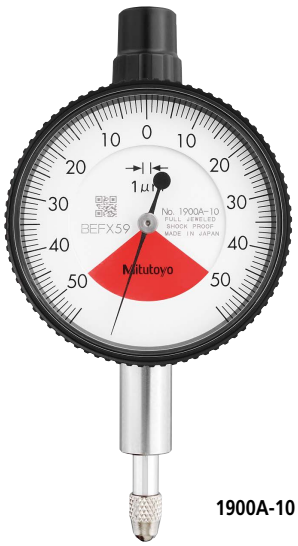

1900A-10

Balanced scale

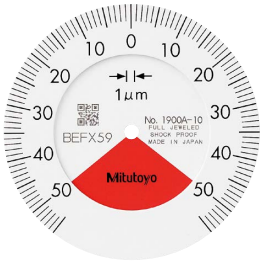

Graduation: 0.001 mm,
Measuring range: 0.1 mm

1900A-10
- One revolution
- Shockproof
- Jeweled bearing

1900A-72
- One revolution
- Shockproof
- Dustproof
- Jeweled bearing

F

Mitutoyo reserves the right to change any or all aspects of any product specification, including prices, designs and service content, without notice.

FEATURES

Metric

Order No.						
w/lug	Flat-back					
1929A	**1929AB**	✔	✔			✔
1929A-62	**1929AB-62**	✔	✔		✔	✔
1900A-10	**1900AB-10**	✔	✔	✔		✔
1900A-72	**1900AB-72**	✔	✔	✔	✔	✔

Inch

Order No.						
w/lug	Flat-back					
1909A-62	**1909AB-62**	✔	✔		✔	✔
1910A-72	**1910AB-72**	✔	✔	✔	✔	✔

SPECIFICATIONS

Metric ☐ ISO/JIS type

Order No.		Graduation (mm)	Range (range/rev) (mm)	Maximum permissible error (MPE) (µm)						Dial reading	Measuring force (N)
				Indication error				Hysteresis	Repeat-ability		
w/lug	Flat-back			1/10 Rev	1/2 Rev	1 Rev	Measuring range				
1929A	**1929AB**	0.01	1 (1.4)	7	—	—	11	4	3	50-0-50	1.4 or less
1929A-62	**1929AB-62**	0.01	1 (1.4)	7	—	—	11	4	3	50-0-50	1.4 or less
1900A-10	**1900AB-10**	0.001	0.1 (0.14)	2.5	—	—	5	2	1	50-0-50	1.5 or less
1900A-72	**1900AB-72**	0.001	0.1 (0.14)	2.5	—	—	5	2	1	50-0-50	1.5 or less

Note: Completed products inspection is performed in the vertical orientation (contact point downward) and the stated accuracy is guaranteed.

Inch ☐ ANSI/AGD type

Order No.		Graduation (in)	Range (range/rev) (in)	Accuracy (in)		Repeat-ability (in)	Dial reading	Measuring force (N)
				First 1 Rev/2.5 Rev/10 Rev	Retrace			
w/lug	Flat-back							
1909A-62	**1909AB-62**	0.0005	0.04 (0.056)	±0.0005/—/—	0.00016	±0.0001	20-0-20	1.4 or less
1910A-72	**1910AB-72**	0.0001	0.006 (0.008)	±0.0001/—/—	0.0001	±0.00003	3-0-3	1.5 or less

Note: Completed products inspection is performed in the vertical orientation (contact point downward) and the stated accuracy is guaranteed.

DIMENSIONS

ANSI/AGD Type

Unit: in

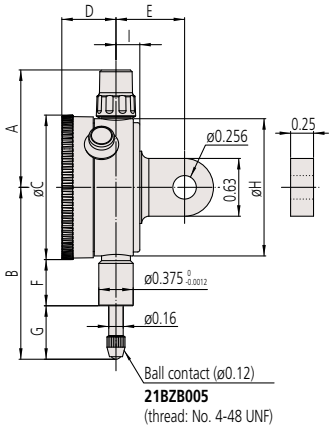

Order No.	A	B	C	D	E	F	G	H	I	Mass (g)	
										w/lug	Flat-back
1909A-62	1.28	1.64	1.57	0.59	0.75	0.50	0.35	1.50	0.26	90	70
1910A-72	1.28	1.61	1.57	0.59	0.75	0.50	0.31	1.50	0.26	90	70

Note: Refer to pages F-57 to F-60 for details of contact points.

ISO/JIS Type

Unit: mm

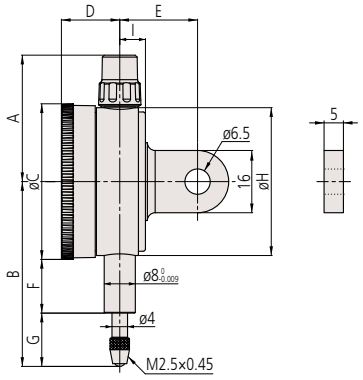

Order No.	A	B	C	D	E	F	G	H	I	Mass (g)	
										w/lug	Flat-back
1929A	32.5	47.5	40	15	20	13.8	13.7	38	6.6	90	70
1929A-62	32.5	47.5	40	15	20	13.8	13.7	38	6.6	90	70
1900A-10	32.5	53.5	40	15	20	13.8	19.7	38	6.6	95	75
1900A-72	32.5	53.5	40	15	20	13.8	19.7	38	6.6	95	75

Note: Refer to pages F-57 to F-60 for details of contact points.

Optional Accessories

- Limit hand (2 pcs.): **21AAB363**



- Bezel clamp: **21RZA149**

Mitutoyo reserves the right to change any or all aspects of any product specification, including prices, designs and service content, without notice.

Optional Accessories

- Limit hand (2 pcs.): **21AZB195**
- Bezel clamp: **21AZB148** (for metric type)
  21RZA065 (for inch type)

SERIES 3, 4 — Long StrokeType, Large Diameter

- Dial indicators with a large-diameter dial face for easy reading.
- Models with longer measuring ranges are also available.
- All types are supplied with limit markers and a bezel clamp as standard.
- The stem and spindle are made of high-strength quench-hardened stainless steel suitable for heavy-duty use.
- A carbide contact point is used.
- The bezel clamp and lifting lever* (optional) can be attached to either the right or left side. These parts can be easily installed and removed without tools.

  * Can be attached only to **3046A**, **3047A**, **3050A**, **3109A-10** and **4046A**.

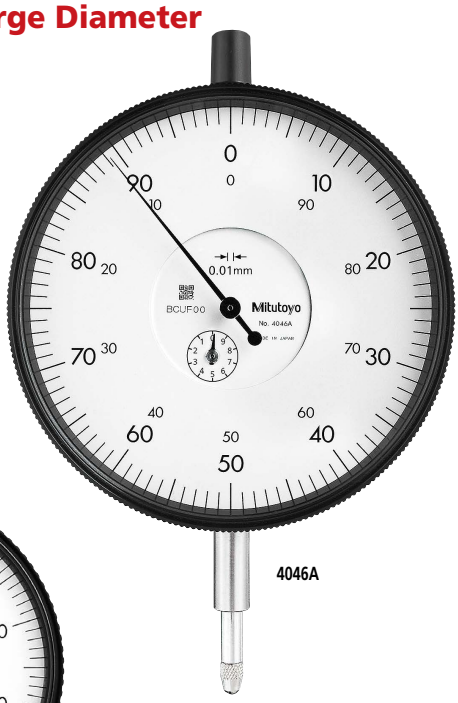

4046A

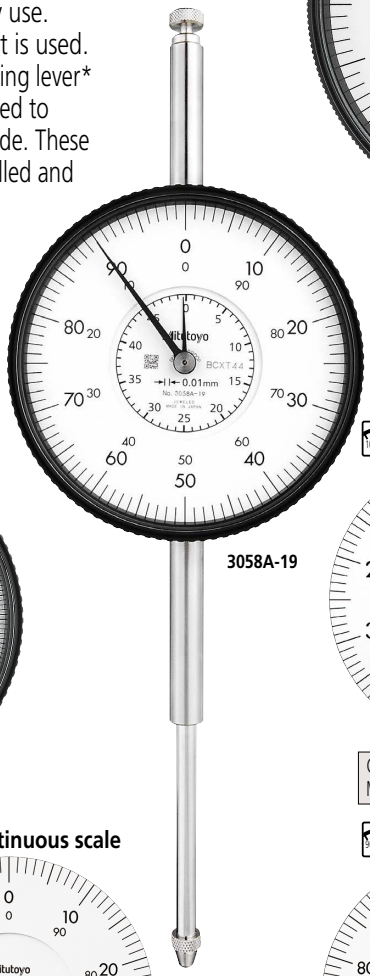

3058A-19

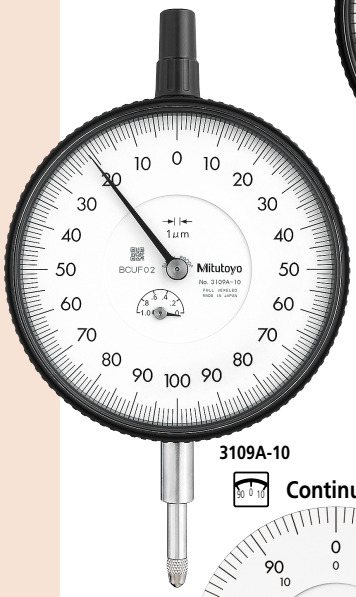

3109A-10

Continuous scale

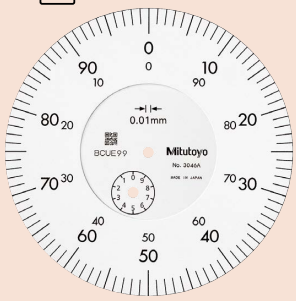

Graduation: 0.01 mm, Measuring range: 10 mm **3046A**

Continuous scale

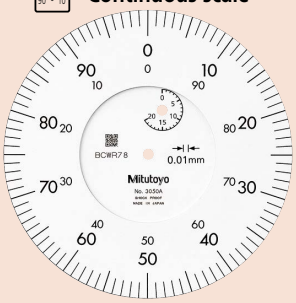

Graduation: 0.01 mm, Measuring range: 20 mm **3050A**

Continuous scale

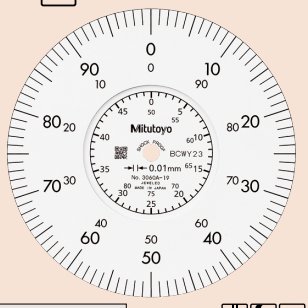

Graduation: 0.01 mm, Measuring range: 80 mm **3060A-19**

Continuous scale

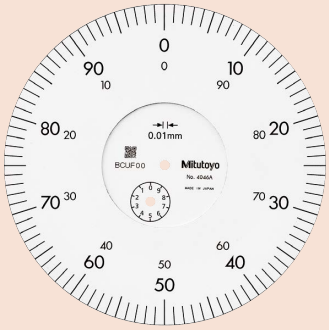

Graduation: 0.01 mm, Measuring range: 10 mm **4046A**

Balanced scale

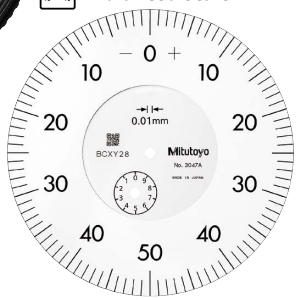

Graduation: 0.01 mm, Measuring range: 10 mm **3047A**

Continuous scale

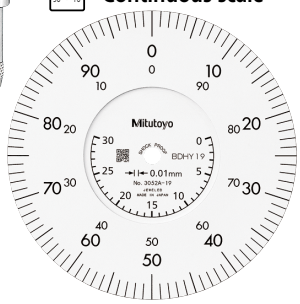

Graduation: 0.01 mm, Measuring range: 30 mm **3052A-19**

Continuous scale

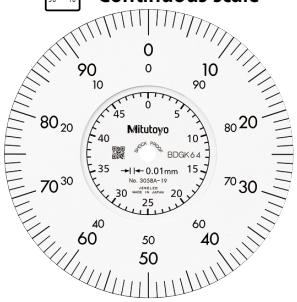

Graduation: 0.01 mm, Measuring range: 50 mm **3058A-19**

Continuous scale

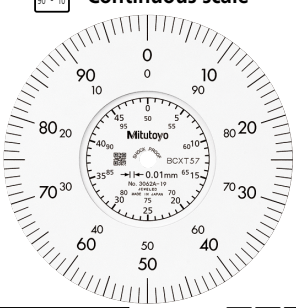

Graduation: 0.01 mm, Measuring range: 100 mm **3062A-19**

Balanced scale

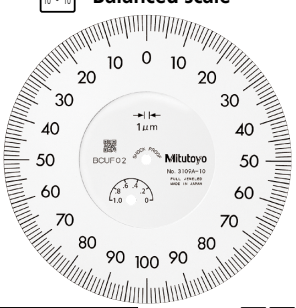

Graduation: 0.001 mm, Measuring range: 1 mm **3109A-10**

F

Mitutoyo reserves the right to change any or all aspects of any product specification, including prices, designs and service content, without notice.

DIMENSIONS

ISO/JIS Type

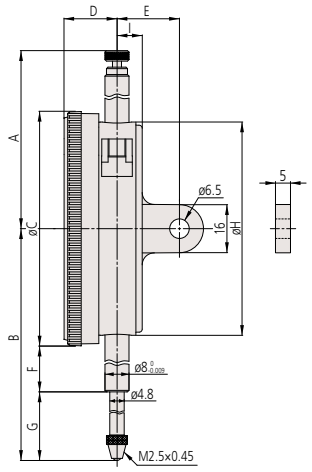

Unit: mm

Order No.	A	B	C	D	E	F	G	H	I
3046A	59.6	75.5	78	17.6	21	15.9	20.6	71	9
3047A	59.6	75.5	78	17.6	21	15.9	20.6	71	9
3050A	52.6	94	78	17.6	21	25.9	29.1	71	9
3052A-19*	72.9	104.3	78	17.6	21	25.9	39.4	71	9
3058A-19*	81.9	142.3	78	17.6	21	43.9	59.4	71	9
3060A-19*	120.9	202.3	78	17.6	21	73.9	89.4	71	9
3062A-19*	141.9	243.3	78	17.6	21	94.9	109.4	71	9
3109A-10	59.6	79	78	17.6	21	15.9	14.1	71	9
4046A	59.6	84	92	21.5	21	18.9	19.1	71	9

* The shoulder on a contact point (standard accessory) acts as a stop to prevent spindle overrun that may otherwise damage the indicator. For this reason, if you need to install an optional contact point with an outside diameter smaller than 7 mm, use a washer (with outside diameter of at least 7 mm, inside diameter of 3 mm, and thickness of approx. 0.5 mm) placed between the contact point and the spindle.
Note: Refer to pages F-57 to F-60 for details of contact points.

Unit: mm

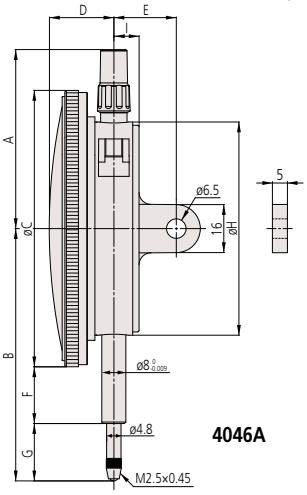

4046A

ANSI/AGD Type

3414A
3415A
3416A
3417A

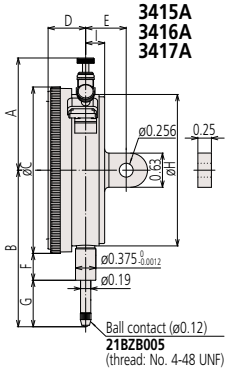

3802A-10
3803A-10

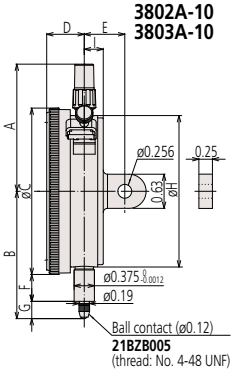

3424A-19
3426A-19
3428A-19

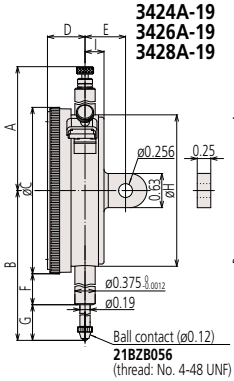

4887A-19

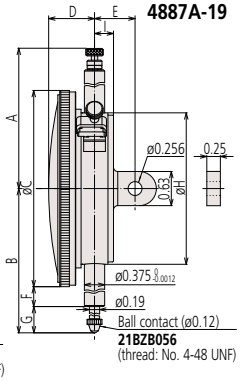

Unit: in

Order No.	A	B	C	D	E	F	G	H	I
3414A	2.07	2.89	3.07	0.70	3/4	0.50	0.86	2.80	0.35
3415A	2.07	2.89	3.07	0.70	3/4	0.50	0.86	2.80	0.35
3416A	2.07	3.39	3.07	0.70	3/4	0.50	1.36	2.80	0.35
3417A	2.07	3.39	3.07	0.70	3/4	0.50	1.36	2.80	0.35
3424A-19*	3.31	5.88	3.07	0.70	3/4	1.99	2.35	2.80	0.35
3426A-19*	4.84	7.80	3.07	0.70	3/4	2.91	3.35	2.80	0.35
3428A-19*	5.67	9.63	3.07	0.70	3/4	3.74	4.35	2.80	0.35
3802A-10	2.41	2.35	3.07	0.70	3/4	0.50	0.32	2.80	0.35
3803A-10	2.41	2.35	3.07	0.70	3/4	0.50	0.32	2.80	0.35
4887A-19*	4.84	7.80	3.62	0.85	3/4	2.63	3.35	2.80	0.35

FEATURES

Metric

Order No.							
w/lug	Flat-back						
3046A	3046AB	✔					
3047A	3047AB		✔				
3050A	3050AB	✔			✔		
3052A-19	3052AB-19	✔		✔		✔	✔
3058A-19	3058AB-19	✔		✔		✔	✔
3060A-19	3060AB-19	✔		✔		✔	✔
3062A-19	3062AB-19	✔		✔		✔	✔
3109A-10	3109AB-10		✔	✔		✔	
4046A	4046AB	✔					

Inch

Order No.						
w/lug	Flat-back					
3414A	3414AB	✔				
3415A	3415AB		✔			
3416A	3416AB	✔				
3417A	3417AB		✔			
3424A-19	3424AB-19	✔		✔	✔	✔
3426A-19	3426AB-19	✔		✔	✔	✔
3428A-19	3428AB-19	✔		✔	✔	✔
3802A-10	3802AB-10	✔		✔	✔	
3803A-10	3803AB-10		✔	✔	✔	
4887A-19	4887AB-19	✔		✔	✔	✔

SPECIFICATIONS

Metric

ISO/JIS type

Order No.		Graduation (mm)	Range (range/rev) (mm)	Maximum permissible error (MPE) (µm)						Dial reading	Measuring force (N)
				Indication error				Hysteresis	Repeat-ability		
w/lug	Flat-back			1/10 Rev	1/2 Rev	1 Rev	Measuring range				
3046A	3046AB	0.01	10 (1)	5	9	10	15	3	3	±0-100	1.4 or less
3047A	3047AB	0.01	10 (1)	5	9	10	15	3	3	0-50-0	1.4 or less
3050A	3050AB	0.01	20 (1)	8	10	15	20	5	4	±0-100	2.0 or less
3052A-19	3052AB-19	0.01	30 (1)	10	12	15	25	7	5	±0-100	2.5 or less
3058A-19	3058AB-19	0.01	50 (1)	10	12	15	30	8	5	±0-100	3.0 or less
3060A-19*1	3060AB-19*1	0.01	80 (1)	12	17	20	45	9	5	±0-100	3.0 or less
3062A-19*1	3062AB-19*1	0.01	100 (1)	12	17	20	50	9	5	±0-100	3.5 or less
3109A-10	3109AB-10	0.001	1 (0.2)	2	3.5	4	5	2	0.5	0-100-0	1.5 or less
4046A	4046AB	0.01	10 (1)	5	9	10	15	3	3	±0-100	1.4 or less

*1 Use in a vertical orientation (contact point downward) for the long stroke model.
*2 Completed products inspection is performed in the vertical orientation (contact point downward) and the stated accuracy is guaranteed.

Inch

ANSI/AGD type

Order No.		Graduation (in)	Range (range/rev) (in)	Accuracy*2 (in)		Repeat-ability (in)	Dial reading	Measuring force (N)
				First 1 Rev/2.5 Rev/10 Rev	Retrace			
w/lug	Flat-back							
3414A	3414AB	0.001	0.5 (0.1)	±0.001/±0.001/±0.001	0.0002	±0.0002	±0-100	1.8 or less
3415A	3415AB	0.001	0.5 (0.1)	±0.001/±0.001/±0.001	0.0002	±0.0002	0-50-0	1.8 or less
3416A	3416AB	0.001	1 (0.1)	±0.001/±0.001/±0.002	0.0002	±0.0002	±0-100	1.8 or less
3417A	3417AB	0.001	1 (0.1)	±0.001/±0.001/±0.002	0.0002	±0.0002	0-50-0	1.8 or less
3424A-19	3424AB-19	0.001	2 (0.1)	±0.001/±0.001/±0.002 /±0.003 (20 Rev)	0.00033	±0.0002	±0-100	3.0 or less
3426A-19*1	3426AB-19*1	0.001	3 (0.1)	±0.001/±0.001/±0.002/±0.003 (20 Rev)/±0.005 (Over 20 Rev)	0.00033	±0.0002	±0-100	3.0 or less
3428A-19*1	3428AB-19*1	0.001	4 (0.1)	±0.001/±0.001/±0.002/±0.003 (20 Rev)/±0.005 (Over 20 Rev)	0.00033	±0.0002	±0-100	3.5 or less
3802A-10	3802AB-10	0.0001	0.025 (0.01)	±0.0001/±0.0001/—	0.0001	±0.00003	0-10	2.0 or less
3803A-10	3803AB-10	0.0001	0.025 (0.01)	±0.0001/±0.0001/—	0.0001	0±.00003	0-5-0	2.0 or less
4887A-19*1	4887AB-19*1	0.001	3 (0.1)	±0.001/±0.001/±0.002/±0.003 (20 Rev)/±0.005 (Over 20 Rev)	0.00033	±0.0002	±0-100	3.0 or less

*1 Use in a vertical orientation (contact point downward) for the long stroke model.
*2 Completed products inspection is performed in the vertical orientation (contact point downward) and the stated accuracy is guaranteed.

Mitutoyo reserves the right to change any or all aspects of any product specification, including prices, designs and service content, without notice.

ANSI/AGD Type Metric Dial Indicators
with ø3/8 inch Stem and #4-48UNF-Thread Contact Point Compatible Type

SPECIFICATIONS

Metric SERIES 1 — ☐ ANSI/AGD type

Order No.		Graduation (mm)	Range (range/rev) (mm)	Accuracy (µm)		Repeat-ability (µm)	Dial reading	Measuring force (N)
w/lug	Flat-back			First 1 Rev/2.5 Rev/10 Rev	Retrace			
1230A-01	**1230AB-01**	0.01	2.5 (1)	±10/±10/—	3	±2	0-100	1.4 or less
1231A-01	**1231AB-01**	0.01	2.5 (1)	±10/±10/—	3	±2	0-50-0	1.4 or less
1044A-01	**1044AB-01**	0.01	5 (1)	±10/±10/±13	3	±3	±0-100	1.4 or less
1045A-01	**1045AB-01**	0.01	5 (1)	±10/±10/±13	3	±3	0-50-0	1.4 or less
1010A-11	**1010AB-11**	0.002	0.5 (0.2)	±2/±2/—	2	±1	0-20	1.5 or less
1011A-11	**1011AB-11**	0.002	0.5 (0.2)	±2/±2/—	2	±1	0-10-0	1.5 or less

Note: Completed products inspection is performed in the vertical orientation (contact point downward) and the stated accuracy is guaranteed.

Metric SERIES 2 — ☐ ANSI/AGD type

Order No.		Graduation (mm)	Range (range/rev) (mm)	Accuracy (µm)		Repeat-ability (µm)	Dial reading	Measuring force (N)
w/lug	Flat-back			First 1 Rev/2.5 Rev/10 Rev	Retrace			
2231A-01	**2231AB-01**	0.01	2.5 (1)	±10/±10/—	3	±3	0-50-0	1.4 or less
2046A-01	**2046AB-01**	0.01	10 (1)	±10/±10/±13	3	±3	±0-100	1.4 or less
2046A-11	**2046AB-11**	0.01	10 (1)	±10/±10/±13	3	±3	±0-100	1.4 or less
2047A-01	**2047AB-01**	0.01	10 (1)	±10/±10/±13	3	±3	0-50-0	1.4 or less
2047A-11	**2047AB-11**	0.01	10 (1)	±10/±10/±13	3	±3	0-50-0	1.4 or less
2902A-01	**2902AB-01**	0.01	10 (1)	±10/±10/±13	3	±3	100-0	1.4 or less
2050A-01	**2050AB-01**	0.01	20 (1)	±10/±10/±15/±20 (20 Rev)	4	±3	±0-100	2.0 or less
2056A-01	**2056AB-01**	0.01	25 (1)	±10/±10/±15/±20 (20 Rev)/ ±25 (Over 20 Rev)	4	±3	±0-100	2.5 or less
2109A-11	**2109AB-11**	0.001	1 (0.2)	±3/±3/±4	2	±0.3	0-10-0	1.5 or less
2119A-11	**2119AB-11**	0.001	5 (0.2)	±7/±7/±8/±10 (20 Rev)/ ±10 (Over 20 Rev)	2.5	±0.3	0-10-0	1.5 or less

Note: Completed products inspection is performed in the vertical orientation (contact point downward) and the stated accuracy is guaranteed.

FEATURES

Metric

Order No.								
w/lug	Flat-back							
1230A-01	**1230AB-01**							
1231A-01	**1231AB-01**							
1044A-01	**1044AB-01**							
1045A-01	**1045AB-01**							
1010A-11	**1010AB-11**				✔			✔
1011A-11	**1011AB-11**				✔			✔

Metric

Order No.									
w/lug	Flat-back								
2231A-01	**2231AB-01**								
2046A-01	**2046AB-01**								
2046A-11	**2046AB-11**				✔				
2047A-01	**2047AB-01**								
2047A-11	**2047AB-11**				✔				
2902A-01	**2902AB-01**								✔
2050A-01	**2050AB-01**								
2056A-01	**2056AB-01**								
2109A-11	**2109AB-11**				✔			✔	
2119A-11	**2119AB-11**				✔				

Optional Accessories

- Backs (See page F-61)
- Contact points (See pages F-57 to F-60)

Mitutoyo reserves the right to change any or all aspects of any product specification, including prices, designs and service content, without notice.

SERIES 2 — Special Dial Indicators

Adjustable hand dial indicator

- The hand position can be adjusted independently of the position of the spindle by rotating the top knob.



2048A-10

Continuous scale

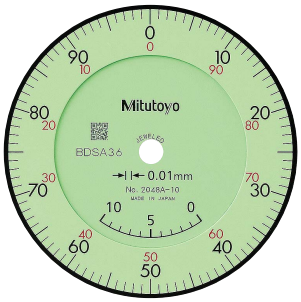

Graduation: 0.01 mm,
Measuring range: 10 mm

2048A-10
With coaxial revolution counter
Adjustable hand
Jeweled bearing

DIMENSIONS

ISO / JIS Type

Unit: mm

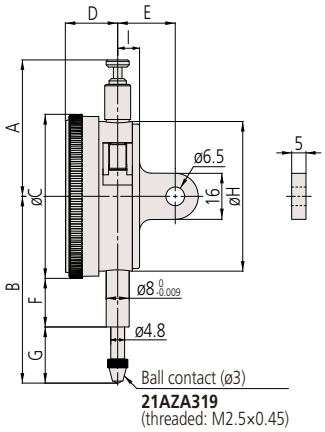

Order No.	A	B	C	D	E	F	G	H	I	Mass (g)	
										w/lug	Flat-back
2048A-10	47.4	64.9	57	18.1	20	16.9	19.5	52	7.6	144	135

Note 1: Contact points, other than dedicated types, cannot be installed.
Note 2: The shoulder on a contact point (standard accessory) acts as a stop to prevent spindle overrun that may otherwise damage the indicator. For this reason, if you need to install an optional contact point with an outside diameter smaller than 7 mm, use a washer (with outside diameter of at least 7 mm, inside diameter of 3 mm, and thickness of approx. 0.5 mm) placed between the contact point and the spindle.

SPECIFICATIONS

Metric

Order No.		Graduation (mm)	Range (range/rev) (mm)	Maximum permissible error (MPE) (µm)						Dial reading	Measuring force (N)
				Indication error				Hysteresis	Repeat-ability		
w/lug	Flat-back			1/10 Rev	1/2 Rev	1 Rev	Measuring range				
2048A-10	**2048AB-10**	0.01	10 (1)	5	9	10	15	3	3	±0-100	1.4 or less

Note: Completed products inspection is performed in the vertical orientation (contact point downward) and the stated accuracy is guaranteed.

FEATURES

Metric

Order No.						
w/lug	Flat-back			STOP		
2048A-10	**2048AB-10**	✔	✔		✔	✔

Optional Accessories

- Limit hand (2 pcs.): **21AZB195**

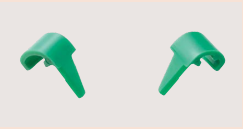

- Bezel clamp: **21AZB148**



Mitutoyo reserves the right to change any or all aspects of any product specification, including prices, designs and service content, without notice.

Optional Accessories

• Limit hand (2 pcs.): **21AZB195**



• Bezel clamp: **21AZB148**



SERIES 2 — Special Dial Indicators

• A mechanism holds the pointer and the spindle at the position of maximum depression and hence displays the maximum value.

Note: Clearance of peak hold: Push the mechanism release in the direction of the arrow indicated in the dimensional drawing below.



2046A-80

Continuous scale

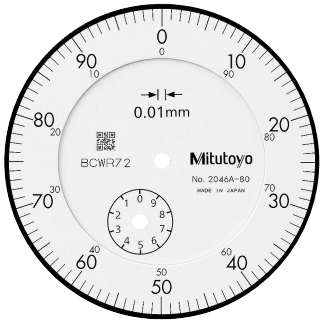

Graduation: 0.01 mm,
Measuring range: 10 mm

2046A-80

Peak retaining

DIMENSIONS

ISO/JIS Type

Unit: mm

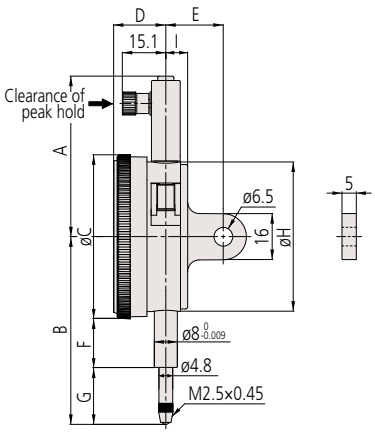

Order No.	A	B	C	D	E	F	G	H	I	Mass (g)	
										w/lug	Flat-back
2046A-80	55.8	65.2	57	18.1	20	16.9	19.8	52	7.6	158	149

FEATURES

Metric

Order No.					
w/lug	Flat-back				
2046A-80	**2046AB-80**	✔		✔	

SPECIFICATIONS

Metric

ISO/JIS type

Order No.		Graduation (mm)	Range (range/rev) (mm)	Maximum permissible error (MPE) (µm)						Dial reading	Measuring force (N)
				Indication error				Hysteresis	Repeat-ability		
w/lug	Flat-back			1/10 Rev	1/2 Rev	1 Rev	Measuring range				
2046A-80	**2046AB-80**	0.01	10 (1)	5	9	10	15	—	—	±0-100	5.0 or less

Note: Completed products inspection is performed in the vertical orientation (contact point downward) and the stated accuracy is guaranteed.

F

Mitutoyo reserves the right to change any or all aspects of any product specification, including prices, designs and service content, without notice.

Back Plunger Type Dial Indicators SERIES 2

- This series has been developed to eliminate the possibility of reading errors due to miscounting multiple revolutions.
- Back Plunger type dial indicators are suitable for mounting onto leveling machine tool tables or inspection jigs, and for use in small spaces where the graduations of standard dial indicators are difficult to see.
- Mitutoyo's proprietary shock-proofing mechanism provides excellent durability and shock resistance.
- Model **2990A-10** provides 0.001 mm graduation.

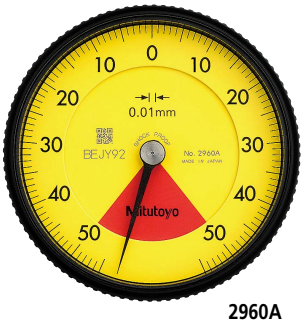

2960A

Balanced scale

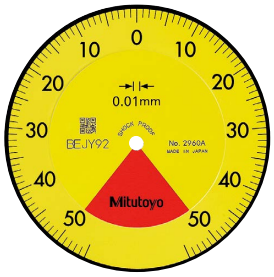

Graduation: 0.01 mm,
Measuring range: 1 mm

2960A
One revolution
Shockproof
Back Plunger

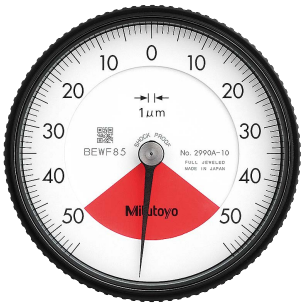

2990A-10

Balanced scale

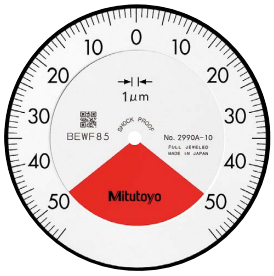

Graduation: 0.01 mm,
Measuring range: 1 mm

2990A-10
One revolution
Shockproof
Back Plunger
Jeweled bearing



Holding bar (optional)

Order No.	øD (mm)	L (mm)
21AAA166	ø6	42
136567	ø6	81
124625	ø6.35	81
21AAA167	ø6.35	42
21AAA168	ø8	42
136568	ø8	81

Note: øD and L: detail shown in drawing below.

Optional Accessory

- Limit hand (2 pcs.): **21AZB195**

DIMENSIONS

Unit: mm

ISO/JIS Type

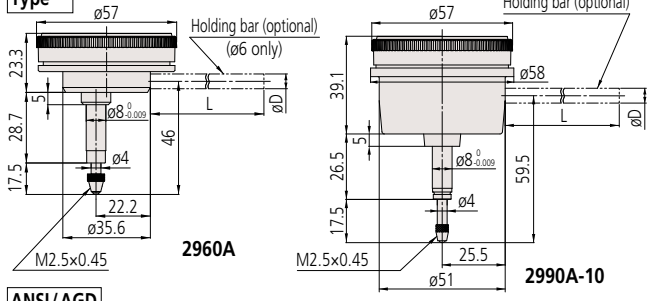

ANSI/AGD Type

Unit: in

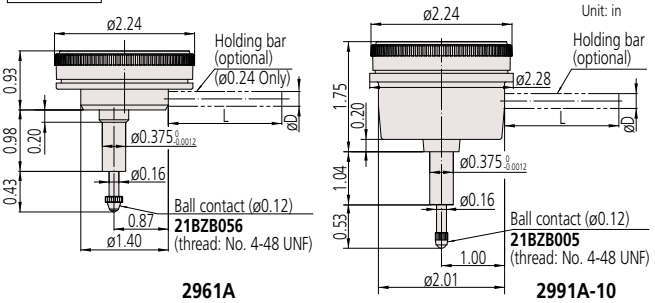

Note 1: The shoulder on a contact point (standard accessory) for **2960A** and **2961A** acts as a stop to prevent spindle overrun that may otherwise damage the indicator. For this reason, if you need to install an optional contact point with an outside diameter smaller than 7 mm, use a washer (with outside diameter of at least 7 mm, inside diameter of 3 mm, and thickness of approx. 0.5 mm) placed between the contact point and the spindle.
Note 2: Refer to pages F-57 to F-60 for details of contact points.

Metric

ISO/JIS type

Order No.	Graduation (mm)	Range (range/rev) (mm)	Maximum permissible error (MPE) (μm)						Dial reading	Measuring force (N)
			Indication error				Hysteresis	Repeat-ability		
			1/10 Rev	1/2 Rev	1 Rev	Measuring range				
2960A	0.01	1 (1.27)	8	—	—	14	4	3	50-0-50	1.4 or less
2990A-10	0.001	0.1 (0.14)	2.5	—	—	5	2	1	50-0-50	1.5 or less

Note 1: Completed products inspection is performed in the vertical orientation (contact point downward) and the stated accuracy is guaranteed.
Note 2: The bezel clamp cannot be used.

Inch

ANSI/AGD type

Order No.	Graduation (in)	Range (range/rev) (in)	Accuracy (in)		Repeatbility (in)	Dial reading	Measuring force (N)
			First 1 Rev/2.5 Rev/10 Rev	Retrace			
2961A	0.0005	0.04 (0.05)	±0.0005/—/—	0.00016	±0.0001	20-0-20	1.4 or less
2991A-10	0.0001	0.008 (0.01)	±0.0002/—/—	0.0001	±0.00005	4-0-4	1.5 or less

Note 1: Completed products inspection is performed in the vertical orientation (contact point downward) and the stated accuracy is guaranteed.
Note 2: The bezel clamp cannot be used.

Metric

Order No.					
2960A	✔	✔	✔		✔
2990A-10	✔	✔	✔	✔	✔

Inch

Order No.					
2961A	✔	✔	✔		✔
2991A-10	✔	✔	✔	✔	✔

Mitutoyo reserves the right to change any or all aspects of any product specification, including prices, designs and service content, without notice.

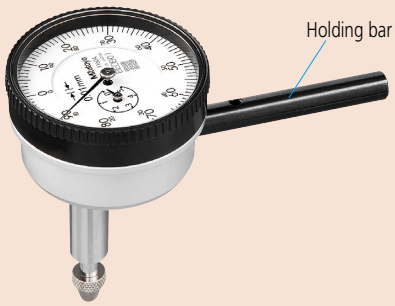

Back Plunger Type Dial Indicators SERIES 1

- Back Plunger type dial indicators are suitable for mounting onto leveling machine tool tables or inspection jigs, and for use in situations where standard dial indicators are difficult to read.
- Model **1960A** and **1961A**, which uses Mitutoyo's proprietary shock-proofing mechanism, has excellent durability and shock resistance.

Holding bar (optional)

Order No.	øD (mm)	L (mm)
21AAA166	ø6	42
136567	ø6	81
124625	ø6.35	81
21AAA167	ø6.35	42
21AAA168	ø8	42
136568	ø8	81

Note: øD and L: detail shown in drawing below.

Optional Accessory

• Limit hand (2 pcs.): **21AAB363**

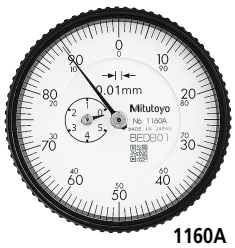

1160A

Continuous scale



Graduation: 0.01 mm, Measuring range: 5 mm

1160A
Back Plunger

Reverse reading



Graduation: 0.01 mm, Measuring range: 5 mm

1162A
Back Plunger

DIMENSIONS

ANSI/AGD Type Unit: in

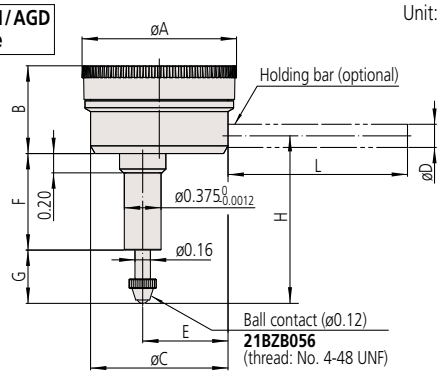

Order No.	A	B	C	E	F	G	H	Mass (g) (Bar excluded)
1166A	1.57	0.89	1.40	7/8	0.98	0.43	1.67	80
1167A	1.57	0.89	1.40	7/8	0.98	0.43	1.67	80
1168A	1.57	0.89	1.40	7/8	0.98	0.43	1.67	80
1961A	1.57	0.89	1.40	7/8	0.98	0.43	1.59	80

ISO/JIS Type Unit: mm

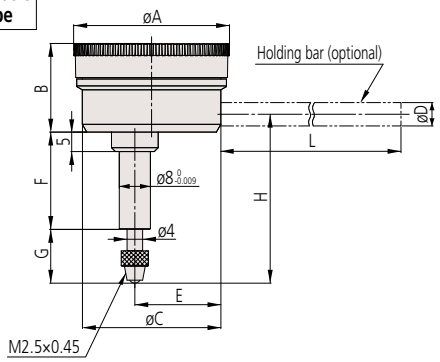

Order No.	A	B	C	E	F	G	H	Mass (g) (Bar excluded)
1160A	40	22.7	35.6	21.8	25	13.8	43.3	80
1162A	40	22.7	35.6	21.8	25	13.8	43.3	80
1960A	40	22.7	35.6	21.8	28.7	12.8	46	80

Note 1: Contact point (standard accessory) for all products in this page has a role as a top dead point stopper. For this reason, if you need to install an optional contact point with an outside diameter smaller than 7 mm, use a washer (with outside diameter of at least 7 mm, inside diameter of 3 mm, and thickness of approx. 0.5 mm) placed between the contact point and the spindle.
Note 2: Refer to pages F-57 to F-60 for details of contact points.

Balanced scale

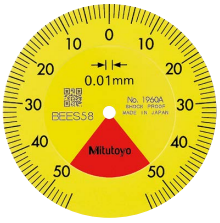

Graduation: 0.01 mm, Measuring range: 1 mm

1960A
One revolution
Shockproof
Back Plunger

FEATURES

Metric

Order No.						
1960A		✔	✔	✔		✔
1160A	✔					✔
1162A					✔	✔

Inch

Order No.						
1961A		✔	✔	✔		✔
1166A	✔					✔
1167A		✔				✔
1168A					✔	✔

SPECIFICATIONS

Metric ISO/JIS type

Order No.	Graduation (mm)	Range (range/rev) (mm)	Maximum permissible error (MPE) (µm)						Dial reading	Measuring force (N)
			Indication error				Hysteresis	Repeat-ability		
			1/10 Rev	1/2 Rev	1 Rev	Measuring range				
1960A	0.01	1 (1.27)	8	—	—	14	4	3	50-0-50	1.4 or less
1160A	0.01	5 (1)	8	12	14	16	4	3	±0-100	1.4 or less
1162A	0.01	5 (1)	8	12	14	16	4	3	100-0	1.4 or less

Note 1: Completed products inspection is performed in the vertical orientation (contact point downward) and the stated accuracy is guaranteed.
Note 2: The bezel clamp cannot be used.

Inch ANSI/AGD type

Order No.	Graduation (in)	Range (range/rev) (in)	Accuracy (in)		Repeatbility (in)	Dial reading	Measuring force (N)
			First 1 Rev/2.5 Rev/10 Rev	Retrace			
1961A	0.001	0.04 (0.05)	±0.001/—/—	0.0002	±0.0002	20-0-20	1.4 or less
1166A	0.001	0.2 (0.05)	±0.001/±0.001/±0.001	0.00033	±0.0002	±0-50	1.4 or less
1167A	0.001	0.2 (0.05)	±0.001/±0.001/±0.001	0.00033	±0.0002	0-25-0	1.4 or less
1168A	0.001	0.2 (0.05)	±0.001/±0.001/±0.001	0.00033	±0.0002	50-0	1.4 or less

Note 1: Completed products inspection is performed in the vertical orientation (contact point downward) and the stated accuracy is guaranteed.
Note 2: The bezel clamp cannot be used.

Mitutoyo reserves the right to change any or all aspects of any product specification, including prices, designs and service content, without notice.

Optional Accessories for Digimatic and Dial Indicators and Linear Gages

Contact points, extension rod

Standard contact point

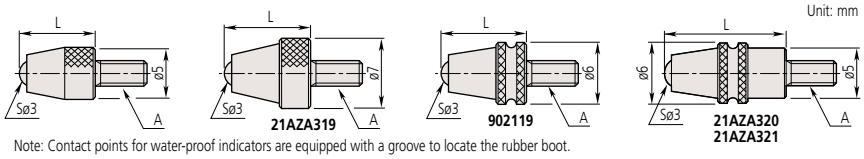

Note: Contact points for water-proof indicators are equipped with a groove to locate the rubber boot.

A: M2.5×0.45

L (mm) \ Material	Carbide		Ruby	Plastic
	Without groove	With groove (water-proof type)	Without groove	Without groove
7.3	**901312**	—	**120047**	**901994**
8.3	**21AZA319**	**902119**	—	—
12.1	—	**21AZA320**	—	—
14	**21JAA225**	—	—	—
15	**120049**	—	**120051**	—
17	**21JAA224**	—	—	—
19.3	—	**21AZA321**	—	—
20	**137391**	—	**137392**	—
22	**21JAA226**	—	—	—
25	**120053**	—	**120055**	—
30	**21AAA252**	—	**21AAA253**	—

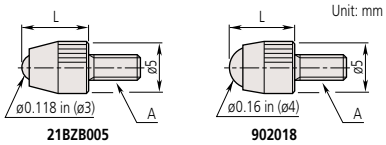



A: 4-48UNF

L (in) \ Material	Carbide	Plastic
1/4	**21BZB005**	**902018**

Shell Type Point

Contact point with a large radius.
Optimal for use on flat surfaces.

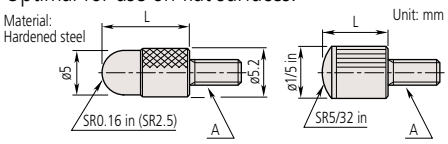

A: M2.5×0.45

Order No.	L (mm)
101386	5
101118	10
137393	15
101387	20
101388	25
21AAA254	30

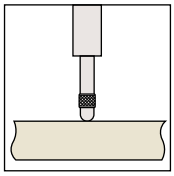



A: 4-48UNF

Order No.	L (in)
193697	3/32
101184	5/32
21AAA031	1/4
21AAA032	3/8
101185	1/2
21AAA033	5/8
101186	3/4
21AAA034	7/8
101187	1
21AAA035	1 1/4
21AAA036	1 1/2
21AAA037	1 3/4
21AAA038	2
21AAA039	2 1/4
21AAA040	2 1/2
21AAA041	2 3/4
21AAA042	3

Ball point

Optimal for workpieces with deep indentations.

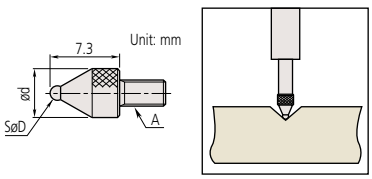

A: M2.5×0.45

Order No.	SøD (mm)	ød (mm)
21AAA349	1, carbide	5
21AAA350	1.5, carbide	5
101122	1.8, steel	5
21AAA351	2.5, carbide	5
21AAA352	4, carbide	5



Mitutoyo reserves the right to change any or all aspects of any product specification, including prices, designs and service content, without notice.

Flat Point

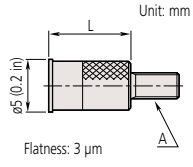

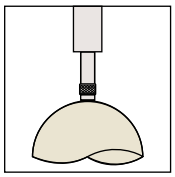

A: M2.5×0.45

Order No.	L
131365	8
21AAA340	10

A: 4-48UNF

Order No.	L (in)
133017	5/16
21AAA043	1/2
21AAA044	3/4
21AAA045	1



131365

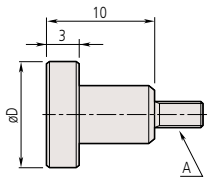

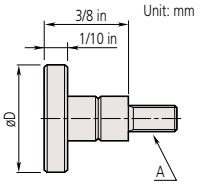

A: M2.5×0.45

Order No.	øD
101117	10
21AAA341	15
21AAA342	20
21AAA343	25
21AAA344	30

A: 4-48UNF

Order No.	øD (in)
101188	1/2
101189	3/8



101117

Flatness: 5 µm

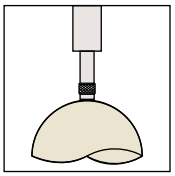

Flat Point (Carbide)

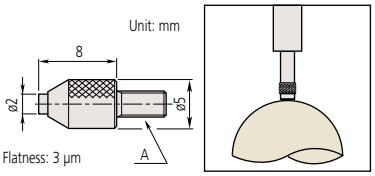



120056

A: M2.5×0.45

Order No.
120056

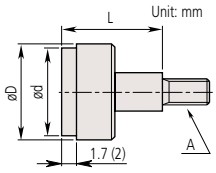

( ): For **120042**

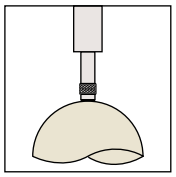



120043

A: M2.5×0.45

Order No.	øD	ød	L
120041	5.2	4.3*1	5
120042	7	6.5*1	10
120043	10.5	9.5*1	10
21AAA345	17	15*2	10
21AAA346	22	20*2	10
21AAA347	27	25*2	10
21AAA348	32	30*2	10

Flatness: *1: 3 µm, *2: 5 µm

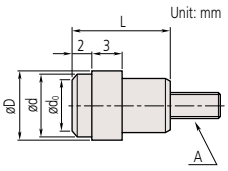

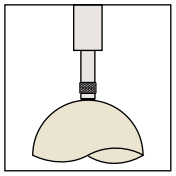



137255

A: M2.5×0.45

Order No.	ød0	ød	øD	L
137255	3	6.4	7	10
137399	4.5	8	9	10

Flatness: 3 µm

Needle Point

Suitable for probing the bottom of a groove or hole.

Material: Hardened steel

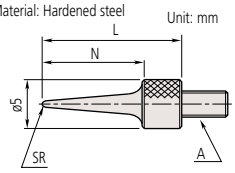

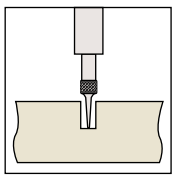



101121

A: M2.5×0.45

Order No.	N	L	SR
101121	11	15	0.4
137413	13	17	0.2
21AAA255	21	25	0.4
21AAA256	31	35	0.4

A: 4-48UNF

Order No.	L (in)	SR (in)
21AAA030	0.6	0.016
21AAA046	1	0.016
21AAA047	1 1/2	0.016
21AAA048	2	0.016

Needle Point (Carbide)

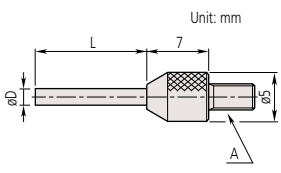

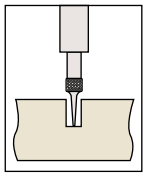



137257

A: M2.5×0.45

Order No.	øD	L
120066	0.45	3
21AAA329	0.45	5
120065	1	3
21AAA330	1	5
21AAA331	1	8
21AAA332	1	10
21AAA333	1	20
21AAA334	1	40
21AAA335	1.5	5
21AAA336	1.5	10
120064	1.5	13
21AAA337	1.5	20
21AAA338	1.5	40
137257	2	8
21AAA257	2	18
21AAA258	2	28
21AAA339	2	40

F

Mitutoyo reserves the right to change any or all aspects of any product specification, including prices, designs and service content, without notice.

Optional Accessories for Digimatic and Dial Indicators and Linear Gages

Spherical Point

A large radius makes this contact point optimal for use where the workpiece needs to slide from the side.

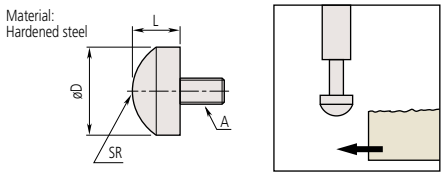



101119

A: M2.5×0.45

Order No.	D (mm)	L (mm)	SR (mm)
111460	5.5	3	5
125258	7.9	5	5
101119	10	5	7

A: 4-48UNF

Order No.	D (in)	L (in)	SR (in)
101205	1/2	1/8	0.35
101204	3/8	3/32	0.28

Spherical Point (Carbide)



120059

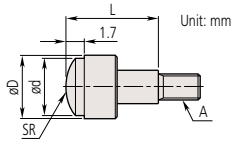

A: M2.5×0.45

Order No.	øD	ød	L	SR
120058	5.2	4.3	5	5
120059	7.5	6.5	10	7
120060	10.5	9.5	10	10

Conical Point

Used for positioning the measurement point. Since it can damage a workpiece easily, it is not suitable for use on soft materials.

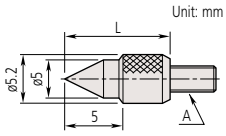

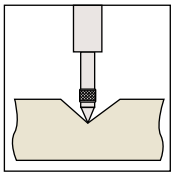

A: M2.5×0.45

Order No.	Tip angle	L
101120	60°	10



101120

A: 4-48UNF

Order No.	Tip angle	L (in)
101190	60°	1/2

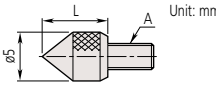



101385

A: M2.5×0.45

Order No.	Tip angle	L
101385	90°	5

A: 4-48UNF

Order No.	Tip angle	L (in)
101191	90°	1/4

Conical Point (Carbide)



120057

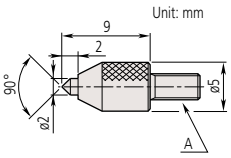

A: M2.5×0.45

Order No.
120057



120068

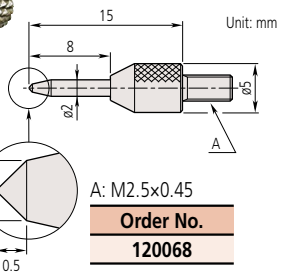

A: M2.5×0.45

Order No.
120068

Knife Edge Point (Carbide)

Suitable for measuring narrow groove diameter, etc.

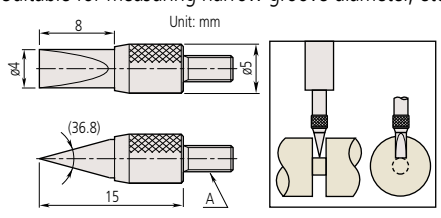



120067

A: M2.5×0.45

Order No.
120067

Blade Point (Carbide)

Suitable for measuring cylinders.

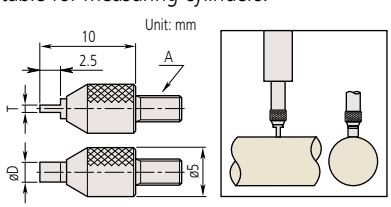

A: M2.5×0.45

Order No.	T	øD
120061	0.4	2
120062	0.6	2
120063	1	4



120062

Mitutoyo reserves the right to change any or all aspects of any product specification, including prices, designs and service content, without notice.

Roller Point

Suitable for use on a moving workpiece surface, or where the workpiece needs to slide from the side.

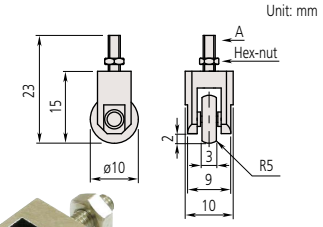



901954

A: M2.5×0.45	A: 4-48UNF
Order No.	Order No.
901954	901991

Roller material: Hardened steel
Roller runout: 10 µm or better
Note 1: For a different roller diameter, contact your local Mitutoyo sales office.
Note 2: High-accuracy roller with 5 µm runout is also available. (Special order item)

Interchangeable Contact Point Set

This set consists of six types of popular contact point for extending the use of an indicator to many applications.



Set Order No. **7822**

A: M2.5×0.45

Order No.	Contact points included
131365	Flat Point (ø5 mm)
101117	Flat Point (ø10 mm)
101121	Needle Point
101119	Spherical Point
101118	Shell Type Point (R2.5×10)
101387	Shell Type Point (R2.5×10)

Lever Point

Suitable for use* on perpendicular faces, such as those within mold cavities. Lever can be adjusted to the required angle.

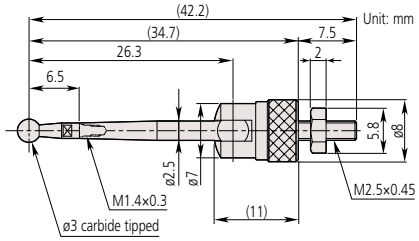



900391

A: M2.5×0.45
Order No.
900391

A: 4-48UNF
Order No.
900393

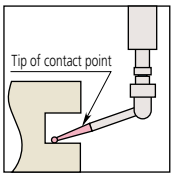

The tip of contact point is interchangeable.
Interchangeable contact points (optional)
ø1 mm contact point: **102824**
ø2 mm contact point: **102825**
ø3 mm contact point: **102826** (provided as standard)

* Perform measurement in the same posture and conditions as for the reference setting so that variation due to lever deflection are reduced. Gently bring the contact point into touch with the workpiece. Use a dial indicator with as small a measuring force as possible.

Extension Rod

A: M2.5×0.45

Order No.	L
303611	10
21AAA259A	15
303612	20
21AAA259B	25
303613	30
21AAA259C	35
21AAA259D	40
21AAA259E	45
21AAA259F	50
21AAA259G	55
304146	60
21AAA259H	65
21AAA259J	70
21AAA259L	75
21AAA259M	80
304147	90
303614	100

A: 4-48UNF

Order No.	L (in)
139167	1/2
301655	1
301657	2
301659	4



303613

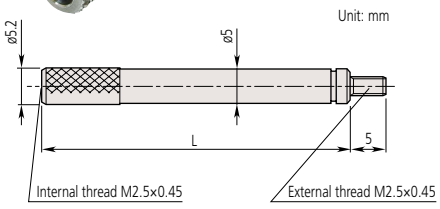

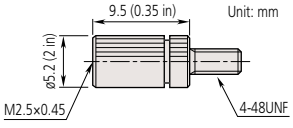

Order No.
21AAA011

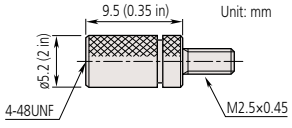

Order No.
21AAA012

F

Mitutoyo reserves the right to change any or all aspects of any product specification, including prices, designs and service content, without notice.

Interchangeable Backs
Optional Accessory for Digimatic and Dial Indicators

SPECIFICATIONS

Description		Order No.		
		SERIES 1 (ø31, ø36, ø40 mm)	SERIES 2 (ø57 mm)	SERIES 3, 4 (ø78, 92 mm)
Lug-on-Center Back 	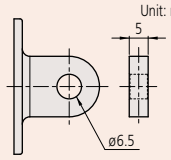	**101210**: metric type **101307**: inch type **190561**: for 1911A-10, 1913A-10 **190139**: 1921A-10, 1923A-10, 1925A-10 **137905**: for 1003A	**101040**: metric type **101306**: inch type **21AZB230**: for water-proof of A type (mm) **21BZB104**: for water-proof of A type (inch)	**100691**: metric type **100797**: inch type
Flat Back 		**101211**: a=2.2 **136872**: for water-proof type **191559**: for 1911AB-10, 1913AB-10, 1921AB-10, 1923AB-10, 1925AB-10 **137906**: for 1003AB	**101039**: a=2.5 **21AZB231**: for water-proof of A type **192910**: (F type water-proof model)	**100836**: a=3.0
Magnetic Back 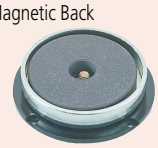	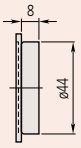	**Special order**	**900928**	**900929**
Back with Offset Lug 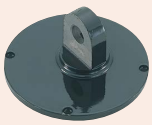	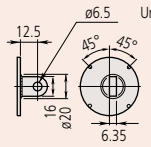	**Special order**	**101167**	**100837**
Back with Post 	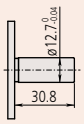	**193172** Custom made	**101169**	**100839**
Back with Screw Mount 	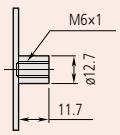	**193173**: M6×1, Custom made **193174**: #1/4-28UNF, Custom made	**136023**: M6×1 **101170**: #1/4-28UNF	**136024**: M6×1 **100840**: #1/4-28UNF
Adjustable Back 	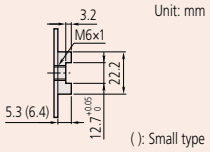	**136025**: M6×1 **129721**: #1/4-20UNC	**136026**: M6×1 **101168**: #1/4-20UNC	**136027**: M6×1 **100838**: #1/4-20UNC
Back with Adjustable Bracket 	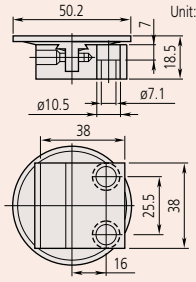	—	**901963**	—

Note 1: If back lids are replaced when using a water-proof or dust-proof model, the water resistance will not be guaranteed.
Note 2: When installing to **297XAB** Series, separately prepare 4 fixing screws (**546666** Self-tapping screw only for plastic). Do not apply a tightening torque of more than 20 N-cm in order to avoid stripping the screw threads.

- A dial or Digimatic indicator may be held in position by clamping on either the stem or the lug on the back of the indicator. The back of the indicator may need to be interchanged with another type for special applications. A wide variety of backs is available for Mitutoyo Digimatic and dial indicators.
- Most lugged backs can be rotated by 90° because they have four retaining screws. However, **190561** and **137905** (for compact dial indicators) are only equipped with two retaining screws, therefore the lug orientation cannot be changed.

Typical application

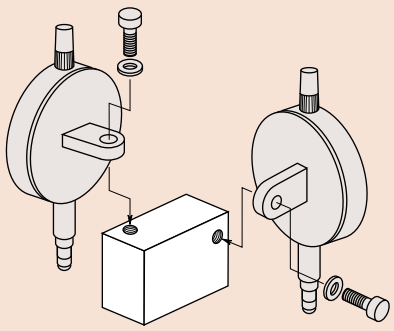

Mitutoyo reserves the right to change any or all aspects of any product specification, including prices, designs and service content, without notice.

Spindle Lifting Lever and Cable Optional Accessories for Digimatic and Dial Indicators

Spindle Lifting Lever (A type)

902100[*1]
Use for A type SERIES 1 dial indicators.



21EZA198[*2]
Use for A type SERIES 2, 3, and 4 dial indicators (up to 10 mm/0.4 in).



21AZB149: Lever
101171: Stop screw



21AZB150[*2]
Use for A type SERIES 2 and 3 dial indicators (from 10 mm/0.4 in up to 20 mm/0.8 in).



Spindle Lifting Lever (S type)

902100[*1]
Use for S type SERIES 1 dial indicators.



21AZB149[*2]
Use for S type SERIES 2, 3, and 4 dial indicators (up to 10 mm/0.4 in).



21AZB150[*2]
Use for S type SERIES 2 and 3 dial indicators (from 10 mm/0.4 in up to 20 mm/0.8 in).



Spindle Lifting Lever (for ID-SS, ID-SX, ID-CX, ID-CNX)

21EZA198[*1*3]



21AZB149: Lever
101171: Stop screw



*1 Before use, replace the stop screw with the standard accessory.
*2 Use the stop screw already fixed to the dial indicator body.
*3 Stop screw is for mm model.

Mitutoyo reserves the right to change any or all aspects of any product specification, including prices, designs and service content, without notice.

Spindle Lifting Cable

- The spindle can be moved up and down using the lifting lever or the release.

Lifting cable

Stroke: 10 mm

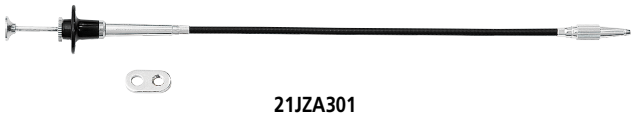

21JZA301



21JZA295

21JZA301: with auto-stop function (300 mm)
21JZA295: without auto-stop function (500 mm)

Note: This accessory is not applicable to dial indicators with a range of 20 mm or more, special models (**2048A(B)-10, 2046A(B)-80**), certain models of 1 series (**1911A(B)-10**, **1913A(B)-10**, **1921A(B)-10**, **1923A(B)-10**, **1925A(B)-10**, **2971AB**, **2972AB**, **2973AB**, **2976AB**, **2977AB**, **2978AB**), back plunger type and water-proof type.

Spindle Lifting Lever

21EAA426

Suitable for 4.8 mm spindle diameter.



Typical application

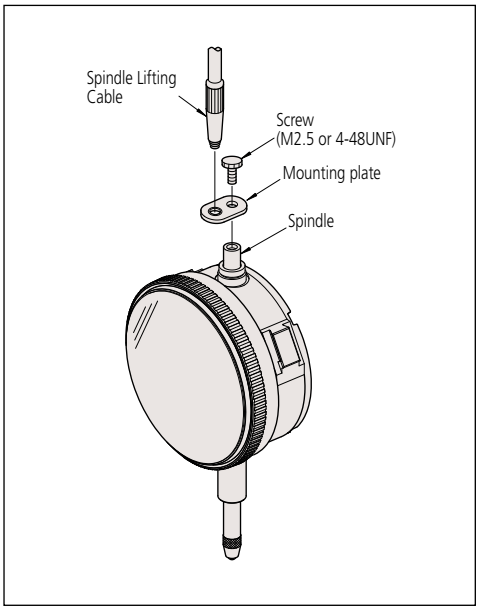

Mitutoyo reserves the right to change any or all aspects of any product specification, including prices, designs and service content, without notice.

Limit Stickers

- Stuck onto the dial indicator's dial face or crystal, these stickers indicate the tolerance limits. They are available in three colors: red, green, and yellow. They are available only for SERIES 2 dial indicators.

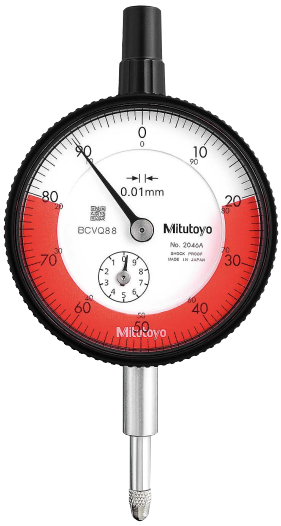

Red



136420
(10 sheets/set)

Green



136421
(10 sheets/set)

Yellow



136422
(10 sheets/set)

Color-coded Spindle Caps

- 9 color-coded spindle caps are available for dial indicators with a range of 10 mm or less.



Note: When attaching to small dial indicators, the measuring range height will be 8 mm taller.

Color	Order No.	
	Standard	Water-proof
Black	**21AAB675**	**21AAB676**
White	**21AAB675W**	**21AAB676W**
Red	**21AAB675R**	**21AAB676R**
Green	**21AAB675G**	**21AAB676G**
Blue	**21AAB675B**	**21AAB676B**
Yellow	**21AAB675Y**	**21AAB676Y**
Orange	**21AAB675D**	**21AAB676D**
Pink	**21AAB675P**	**21AAB676P**
Navy	**21AAB675S**	**21AAB676S**

Note: This accessory is not applicable to **1003A(B)**, **1911A(B)-10**, **1913A(B)-10**, **1921A(B)-10**, **1923A(B)-10**, **1925A(B)-10**, **2971AB**, **2972AB**, **2973AB**, **2976AB**, **2977AB**, and **2978AB**.

F

Dial Indicator Repair Tool Kit



Set order No. 7823EU

Set Configuration

(1) Spindle rest (**129730**)
(2) Pin remover (**129732**)
(3) Punch (**129733**)
(4) Bearing adjuster (**129734**)
(5) Pinion rest (**129735**)
(6) Reamer (ø1: 1/50 taper) (**129736**)
(7) Reamer (ø0.6: 1/50 taper) (**193702**)
(8) Reamer for pointer (ø0.5: 1/20 taper) (**21JAA273**)
(9) Pointer removing tool (**126628**)
(10) Soft touch pliers (**21JAA371**)
(11) Nippers (**901179**)
(12) Pin rest (**129731**)
(13) Hammer (**901178**)
(14) Stick (**21JAA314**)
(15) Brush (**901177**)
(16) Bamboo brush (**901176**)
(17) Pin-vise (**901175**)
(18) Screwdriver (Phillips/flat blade) (**901174**)
(19) Tweezers (**129729**)
(20) Screwdriver (Phillips) (**901173**)
(21) Pointer removing tip (ø0.8) (**126630**)
(22) Pointer removing tip (ø0.5) (**126630B**)
(23) Pointer removing tip (ø1.6) (**126630C**)
(24) Adjustable nut (**100699**)

Typical applications

Remove the long hand
Position the pointer removing tool (No. 9) on the hole diameter of the minute hand. Push the pivot with the pointer removing tool to remove the long hand.

Remove the little hand
Remove the little hand with the nippers (No. 11).

Adjust a bearing
Press the steel or jeweled bearing into its housing using the bearing adjuster (No. 4).

Remove or replace a pin
Place the spindle on the groove of the spindle rest (No. 1). Remove the pin with the pin remover (No. 2) and the hammer (No. 13). Tap the pin directly with the hammer (No. 13) to replace the pin.

Replace the long or little hand
Screw the pinion rest (No. 5) into the pin rest (No. 12). Support the pinion with the fixed pinion rest, and replace the hand with the punch (No. 3) and hammer (No. 13). Reaming is necessary when replacing with a new hand. Use reamers as follows:

- The hands of DG Series A-type and TI-X Series*1 dial test indicators do not require reaming.
- Use the reamer for pointer (No. 8) (ø0.5: 1/20 taper) for S type and T type dial indicators*2.
- Depending on the shaft diameter, use reamer (No. 6) (ø1: 1/50 taper) or reamer (No. 7) (ø0.6: 1/50 taper) for F type dial indicators and other than TI-X Series dial test indicators.

*1 Dial test indicator whose model No. ends in "X".
*2 Dial indicator whose order No. includes an "S", "T" and "A".

Replacing bezels and graduation plates

A bezel and graduation plate must be swaged together so that the graduation plate always rotates with the bezel. Assemblies comprised of a swaged bezel and graduation plate are available for some models.

Order No. of dial indicators	Order No. of swaged assemblies
2046A	**21AZB650**
2109A-10	**21AZB693**

Mitutoyo reserves the right to change any or all aspects of any product specification, including prices, designs and service content, without notice.

SERIES 513 — Dial Test Indicator Features

- Designed to probe surfaces that cannot be reached with a normal dial gage. Useful both for alignment and for measurement purposes.
- Mitutoyo's proprietary new design permits smooth pointer operation.
- Strong frame provides excellent rigidity and durability.
- The pointer and carbide contact point are only slightly magnetizable*, and so they are hardly affected by a magnetic environment. In addition, models with a ruby contact point are available. The ruby contact point also has several times the abrasion resistance of carbide contact point and is safely usable with an electric discharge machine thanks its being a non-conductor.
- Clear and concise wide dial face allows excellent visibility.
- The surface of the crystal is hard-coated for excellent scratch resistance.

* Magnetic material is used for some internal parts.

- Flat crystal makes graduations easy to read. Moreover, the O-ring sealing method used for the bezel prevents water or oil penetration. (Note that this type is NOT water-proof.)
- The main unit is equipped with three dovetails to which the stem with dovetail groove ø6 (standard accessory) can be attached. This greatly improves convenience as the attachment location can be adjusted as needed.
- Five types are available: horizontal, horizontal (20° tilted face), vertical, parallel, and universal, allowing users to select according to their needs.
- Metric Dial Test Indicator is inspected according to JIS B 7533:2015. Horizontal, horizontal (20° tilted face), and vertical types are inspected with the dial face in the upward orientation, while the parallel type is inspected with the dial face in the vertical orientation to guarantee their accuracy.

Feature icons

Icon	Feature description
	High accuracy
	With revolution counter
	Long contact point
	Standard
	Double scale spacing
	Compact (Small face diameter)
	Carbide contact point
	Ruby contact point (Non-conductive and abrasion resistant)



Horizontal



Vertical



Horizontal (20° Tilted face)

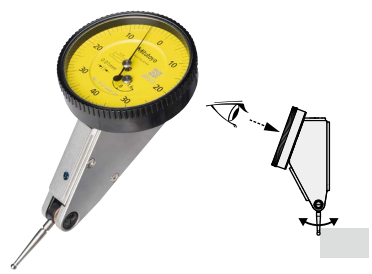

Parallel



Universal



Naming of parts

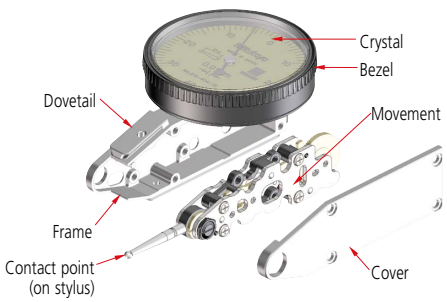

Mitutoyo reserves the right to change any or all aspects of any product specification, including prices, designs and service content, without notice.

Dial Test Indicator
SERIES 513 — Horizontal Type

DIMENSIONS

Horizontal

unit: mm

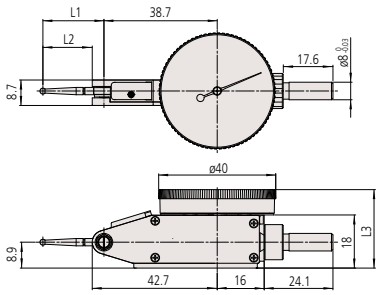

Order No.	L1	L2	L3
513-401-10E	14.7	11.2	27
513-471-10E			
513-405-10E / A / T	18.7	15.2	
513-475-10E			
513-425-10E / A			28
513-404-10E / A / T	20.9	17.4	27
513-474-10E			
513-424-10E / A / T	22.2	18.7	
513-426-10E / A			28
513-478-10E			
513-414-10E / A / T	37.4	33.9	27
513-415-10E / A / T	44.5	41.0	
513-477-10E			

Compact

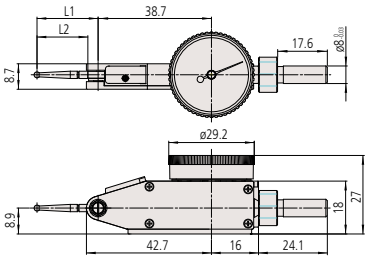

Type	Order No.	L1	L2
Compact	513-465-10E	18.7	15.2
	513-464-10E	20.9	17.4
	513-466-10E	22.2	18.7

Note: A slight difference may occur depending on the center of the contact point, graduation plate, and stem fixing position, etc.

Special Set: 513-908-10E (Metric)

513-404-10E: Dial test indicator
7014-10: Mini magnetic stand

513-907-10E (inch)

513-402-10E: Dial test indicator
7014E-10: Mini magnetic stand





513-404-10E
Contact point No. 103006



513-415-10E
Contact point No. 136013



513-465-10E
Contact point No. 103011



513-402-10E
Contact point No. 133195

Note: **513-4XX-10** is indicated on the dial face. But the Order No. for the Special Set provided with the stem etc. has a suffix (E or A or T) at the end.



Graduation: 0.01 mm
Range: 0.8 mm

513-404-10E / 10A / 10T
Standard
Carbide contact point

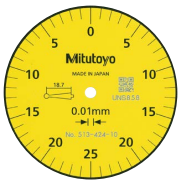

Graduation: 0.01 mm
Range: 0.5 mm

513-424-10E / 10A / 10T
Standard
Double scale spacing
Carbide contact point

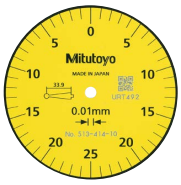

Graduation: 0.01 mm
Range: 0.5 mm

513-414-10E / 10A / 10T
Long contact point
Carbide contact point
Double scale spacing

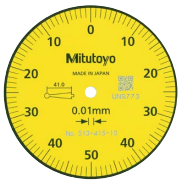

Graduation: 0.01 mm
Range: 1.0 mm

513-415-10E / 10A / 10T
Long contact point
Carbide contact point

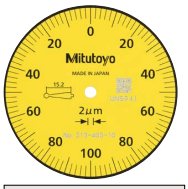

Graduation: 0.002 mm
Range: 0.2 mm

513-405-10E / 10A / 10T
Standard
Carbide contact point

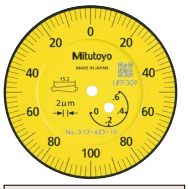

Graduation: 0.002 mm
Range: 0.6 mm

513-425-10E / 10A
With revolution counter
Carbide contact point

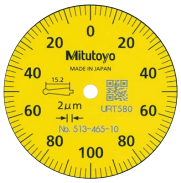

Graduation: 0.002 mm
Range: 0.2 mm

513-465-10E
Compact
Carbide contact point

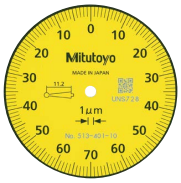

Graduation: 0.001 mm
Range: 0.14 mm

513-401-10E
High accuracy
Carbide contact point

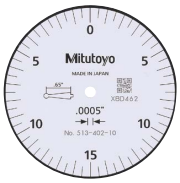

Graduation: 0.0005 in
Range: 0.03 in

513-402-10E / 10T
Standard
Carbide contact point



Graduation: 0.0001 in
Range: 0.008 in

513-403-10E / 10T
Standard
Carbide contact point

F

Mitutoyo reserves the right to change any or all aspects of any product specification, including prices, designs and service content, without notice.

SPECIFICATIONS

Metric

Order No.			Graduation (mm)	Range (mm)	Dial reading	Maximum permissible error (MPE)* (µm)					Mass (g)	Measuring force (N)	High accuracy	With revolution counter	Long contact point	Standard	Double scale spacing	Compact	Carbide contact point	Ruby contact point
Basic set	Plus set	Full set				Measuring range	One rev.	10 scale divisions	Hysteresis	Repeatability											
513-424-10E	513-424-10A	513-424-10T	0.01	0.5	0-25-0	6	–	5	4	3	45	0.3 or less				✔	✔		✔	
513-478-10E	–	–														✔	✔			✔
513-466-10E	–	–									41						✔	✔	✔	
513-414-10E	513-414-10A	513-414-10T				10			5		45	0.2 or less			✔		✔		✔	
513-426-10E	513-426-10A	–		1.5		16	10					0.4 or less		✔			✔		✔	
513-404-10E	513-404-10A	513-404-10T		0.8	0-40-0	9			4			0.3 or less				✔			✔	
513-474-10E	–	–														✔				✔
513-464-10E	–	–									41							✔	✔	
513-415-10E	513-415-10A	513-415-10T		1.0	0-50-0	10	–		5		45	0.2 or less			✔				✔	
513-477-10E	–	–													✔					✔
513-405-10E	513-405-10A	513-405-10T	0.002	0.2	0-100-0	4		2	3	1		0.3 or less				✔			✔	
513-475-10E	–	–														✔				✔
513-465-10E	–	–									41							✔	✔	
513-425-10E	513-425-10A	–		0.6		7	5		4		45	0.4 or less		✔					✔	
513-401-10E	–	–	0.001	0.14	0-70-0	4	–		3			0.3 or less	✔						✔	
513-471-10E	–	–											✔							✔

Inch

Order No.			Graduation (in)	Range (in)	Dial reading	Maximum permissible error (MPE)* (in)			Mass (g)	Measuring force (N)	High accuracy	With revolution counter	Long contact point	Standard	Double scale spacing	Compact	Carbide contact point	Ruby contact point
Basic set	Plus set	Full set				One rev.	Hysteresis	Repeatability										
513-402-10E	–	513-402-10T	0.0005	0.03	0-15-0	±0.0005	0.0002	±0.0002	45	0.3 or less				✔			✔	
513-472-10E	–	–												✔				✔
513-412-10E	–	513-412-10T								0.2 or less			✔				✔	
513-479-10E	–	–											✔					✔
513-462-10E	–	–							41	0.3 or less						✔	✔	
513-407-10E	–	513-407-10T	0.00005	0.008	0-4-0	±0.0001	0.0001	±0.00004	45								✔	
513-403-10E	–	513-403-10T	0.0001											✔			✔	
513-473-10E	–	–												✔				✔
513-463-10E	–	–							41							✔	✔	

Metric/Inch

Order No.			Graduation	Range	Dial reading	Maximum permissible error (MPE)* (µm)				Mass (g)	Measuring force (N)	High accuracy	With revolution counter	Long contact point	Standard	Double scale spacing	Compact	Carbide contact point	Ruby contact point
Basic set	Plus set	Full set				Measuring range	10 scale divisions	Hysteresis	Repeatability										
513-409-10E	–	513-409-10T	0.002 mm /0.0001 in	0.2 mm /0.0076 in	0-10-0 /0-38-0	4	2	3	1	45	0.3 or less							✔	

Inch/Metric

Order No.			Graduation	Range	Dial reading	Maximum permissible error (MPE)* (in)			Mass (g)	Measuring force (N)	High accuracy	With revolution counter	Long contact point	Standard	Double scale spacing	Compact	Carbide contact point	Ruby contact point
Basic set	Plus set	Full set				One rev.	Hysteresis	Repeatability										
513-406-10E	–	513-406-10T	0.0005 in /0.01 mm	0.03 in /0.7 mm	0-15-0 /0-35-0	±0.0005	0.0002	±0.0002	45	0.3 or less							✔	

* We guarantee the accuracy of completed products by inspecting them with the dial face facing upward.
Note: Stem with dovetail groove is not included in the mass.

Set Configuration: Metric and Metric/Inch

Full set



Swivel clamp (**900321**, for ø4 mm stem, ø8 mm stem, and dovetail)

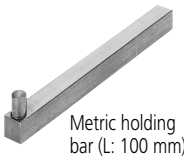

Metric holding bar (L: 100 mm)

Plus set

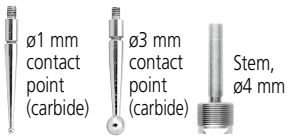

Basic set

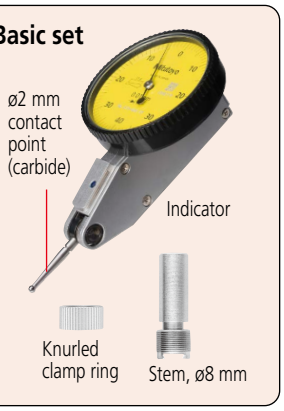

Set Configuration: Inch and Inch/Metric

Full set

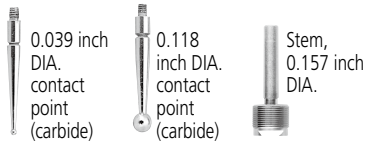



Swivel clamp (**900322**, for 0.157 inch DIA. stem, 0.375 inch DIA. stem, and dovetail)



Inch holding bar (L: 4 in)

Basic set

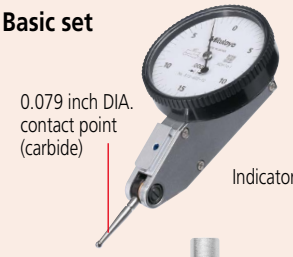

Mitutoyo reserves the right to change any or all aspects of any product specification, including prices, designs and service content, without notice.

Dial Test Indicator
SERIES 513 — Horizontal (20° Tilted Face), Vertical, and Parallel Types

- Specially designed for easy viewing of dial.

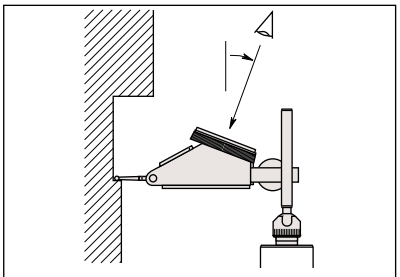

- The dial face obliquely faces upward, allowing users to read the graduations from the user's side. It is convenient when probing on the side of a large workpiece and the workbench is high.

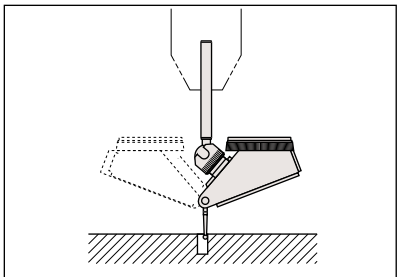

- Using the universal holder allows easy hole centering. The dial face always faces upward when the indicator is rotated, which makes reading easy.



513-454-10E / 10A / 10T

Contact point No. 103006



Graduation: 0.01 mm
Range: 0.8 mm

Carbide contact point



513-452-10E / 10T

Contact point No. 133195



Graduation: 0.0005 in
Range: 0.03 in

Carbide contact point



513-444-10E / 10A / 10T

Contact point No. 103006

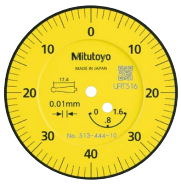

Graduation: 0.01 mm
Range: 1.6 mm

With revolution counter

Carbide contact point



513-445-10E / 10A / 10T

Contact point No. 103011

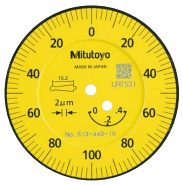

Graduation: 0.002 mm
Range: 0.4 mm

With revolution counter

Carbide contact point



513-484-10E / 10A / 10T

Contact point No. 103006

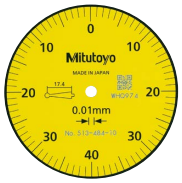

Graduation: 0.01 mm
Range: 0.8 mm

Carbide contact point



513-485-10E

Contact point No. 103011

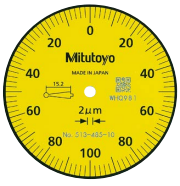

Graduation: 0.002 mm
Range: 0.2 mm

Carbide contact point

Note: **513-4XX-10** is indicated on the dial face. But the Order No. for the set provided with the stem etc. has a suffix (E or A or T) at the end.

Mitutoyo reserves the right to change any or all aspects of any product specification, including prices, designs and service content, without notice.

Dial Test Indicators

With revolution counter | Long contact point | Carbide contact point

SPECIFICATIONS

Metric — Horizontal (20° tilted face) type

Order No.			Graduation (mm)	Range (mm)	Dial reading	Maximum permissible error (MPE)* (μm)					Mass (g)	Measuring force (N)				Remarks
Basic set	Plus set	Full set				Measuring range	One rev.	10 scale divisions	Hysteresis	Repeatability						
513-444-10E	513-444-10A	513-444-10T	0.01	1.6	0-40-0	16	10	5	5	3	48	0.3 or less	✔		✔	
513-445-10E	513-445-10A	513-445-10T	0.002	0.4	0-100-0	6	5	2	4	1			✔		✔	

Inch — Horizontal (20° tilted face) type

Order No.			Graduation (in)	Range (in)	Dial reading	Maximum permissible error (MPE)* (in)				Mass (g)	Measuring force (N)				Remarks
Basic set	Plus set	Full set				One rev.	First 2.5 rev.	Hysteresis	Repeatability						
—	513-442-10A	513-442-10T	0.0005	0.06	0-15-0	±0.0005	±0.0005	0.0002	±0.0002	48	0.3 or less	✔		✔	
—	513-442-16A	513-442-16T									0.3 or less	✔		✔	Black dial
—	513-446-10A	513-446-10T									0.2 or less	✔	✔	✔	
—	513-446-16A	513-446-16T									0.2 or less	✔	✔	✔	Black dial
—	513-443-10A	513-443-10T	0.0001	0.016	0-4-0	±0.0002	±0.0002	0.0001	±0.00004		0.3 or less	✔		✔	
—	513-443-16A	513-443-16T									0.3 or less	✔		✔	Black dial

Metric — Vertical type

Order No.			Graduation (mm)	Range (mm)	Dial reading	Maximum permissible error (MPE)* (μm)					Mass (g)	Measuring force (N)				Remarks
Basic set	Plus set	Full set				Measuring range	One rev.	10 scale divisions	Hysteresis	Repeatability						
513-456-10E	—	—	0.01	0.5	0-25-0	6	—	5	4	3	46	0.3 or less			✔	
513-454-10E	513-454-10A	513-454-10T		0.8	0-40-0	9	—								✔	
513-455-10E	513-455-10A	513-455-10T	0.002	0.2	0-100-0	4	—	2	3	1					✔	

Inch — Vertical type

Order No.			Graduation (in)	Range (in)	Dial reading	Maximum permissible error (MPE)* (in)				Mass (g)	Measuring force (N)				Remarks
Basic set	Plus set	Full set				One rev.	First 2.5 rev.	Hysteresis	Repeatability						
513-452-10E	—	513-452-10T	0.0005	0.03	0-15-0	±0.0005	—	0.0002	±0.0002	46	0.3 or less			✔	
513-453-10E	—	513-453-10T	0.0001	0.008	0-4-0	±0.0001	—	0.0001	±0.00004		0.3 or less			✔	

Metric — Parallel Type

Order No.			Graduation (mm)	Range (mm)	Dial reading	Maximum permissible error (MPE)* (μm)					Mass (g)	Measuring force (N)				Remarks
Basic set	Plus set	Full set				Measuring range	One rev.	10 scale divisions	Hysteresis	Repeatability						
513-486-10E	—	—	0.01	0.5	0-25-0	6	—	5	4	3	53	0.3 or less			✔	
513-484-10E	513-484-10A	513-484-10T		0.8	0-40-0	9	—								✔	
513-485-10E	—	—	0.002	0.2	0-100-0	4	—	2	3	1					✔	

Inch — Parallel Type

Order No.			Graduation (in)	Range (in)	Dial reading	Maximum permissible error (MPE)* (in)				Mass (g)	Measuring force (N)				Remarks
Basic set	Plus set	Full set				One rev.	First 2.5 rev.	Hysteresis	Repeatability						
—	513-482-10A	513-482-10T	0.0005	0.03	0-15-0	±0.0005	—	0.0002	±0.0002	53	0.3 or less			✔	

* Horizontal (20° Tilted Face) Type, Vertical Type:
We guarantee the accuracy of completed products by inspecting them with the dial face facing upward.
Parallel Type: We guarantee the accuracy of completed products by inspecting them with the dial face vertical.

Note: **513-4XX-10** is indicated on the dial face. But the Order No. for the set provided with the stem etc. has a suffix (E or A or T) at the end.

DIMENSIONS

Horizontal (20° Tilted Face) Type

unit: mm

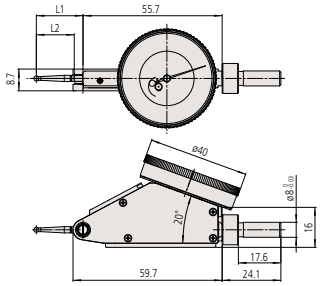

Order No.	L1	L2
513-445-10E	18.7	15.2
513-444-10E	20.9	17.4

Vertical Type

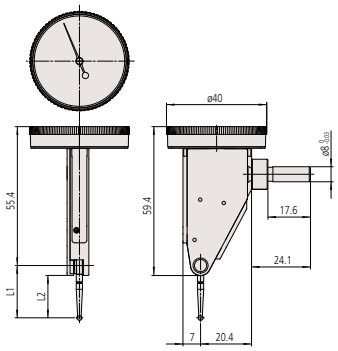

Order No.	L1	L2
513-454-10E	20.9	17.4
513-455-10E	18.7	15.2
513-456-10E	22.2	18.7

Parallel Type

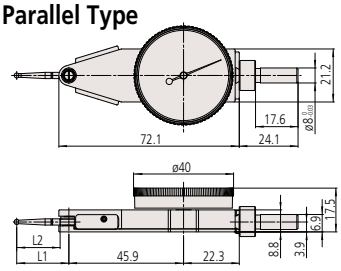

Order No.	L1	L2
513-484-10E	20.9	17.4
513-485-10E	18.7	15.2
513-486-10E	22.2	18.7

Note: A slight difference may occur depending on the center of the contact point, graduation plate, and stem fixing position, etc.

Set Configuration: Metric

Full set



Swivel clamp (**900321**, for ø4 mm stem, ø8 mm stem, and dovetail)

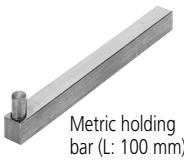

Metric holding bar (L: 100 mm)

Plus set

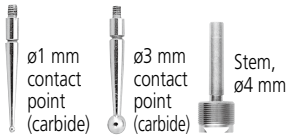

Basic set

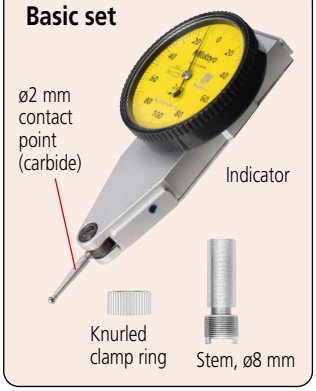

Set Configuration: Inch

Full set



Swivel clamp (**900322**, for 0.157 inch DIA. stem, 0.375 inch DIA. stem, and dovetail)



Inch holding bar (L: 4 in)

Plus set

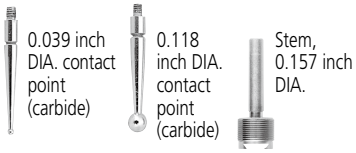

Basic set

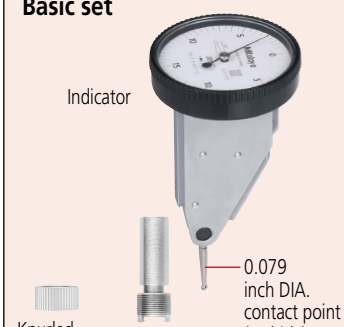

Mitutoyo reserves the right to change any or all aspects of any product specification, including prices, designs and service content, without notice.

Dial Test Indicator
SERIES 513 — Universal Type

Set Configuration: Metric

Full set

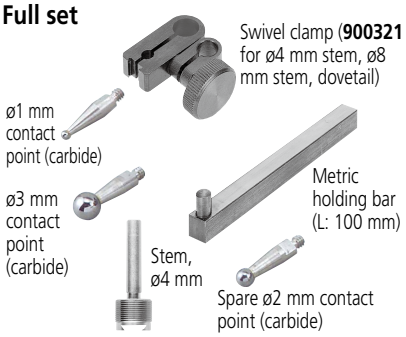

Basic set

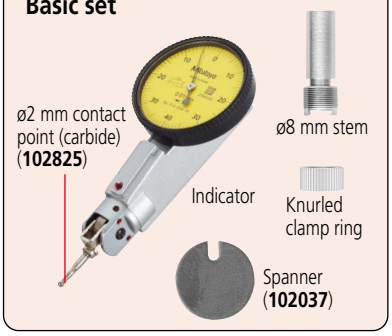

Set Configuration: Inch

Full set

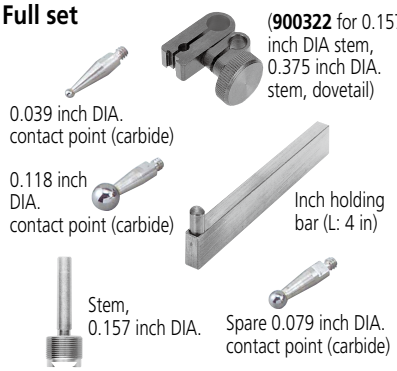

Basic set

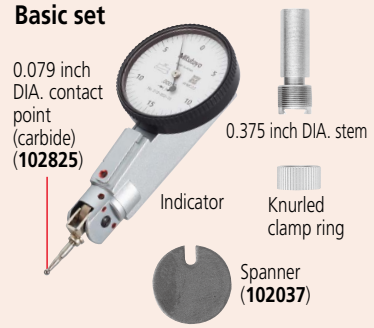

Optional Accessories

- Swivel clamps (See page F-75)
- Holding bars (See page F-75)
- Stems (See page F-75)

102824: ø1 mm contact point (carbide)
102825: ø2 mm contact point (carbide)
102826: ø3 mm contact point (carbide)

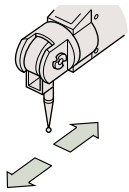

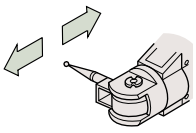

- The direction of the probe movement can be freely changed by rotating the contact point section of the indicator.



513-304-10E

SPECIFICATIONS

Metric

Order No.		Graduation (mm)	Range (mm)	Dial reading	Maximum permissible error (MPE)* (µm)					Mass (g)	Measuring force (N)	High accuracy	With revolution counter	Long contact point	Standard	Double scale spacing	Compact	Dustproof	Carbide contact point	Ruby contact point
Basic set	Full set				Measuring range	One rev.	10 scale divisions	Hysteresis	Repeatability											
513-304 -10E	**513-304-10T**	0.01	0.8	0-40-0	9	—	5	4	3	71	0.3 or less								✔	

Inch

Order No.		Graduation (in)	Range (in)	Dial reading	Maximum permissible error (MPE)* (in)			Mass (g)	Measuring force (N)	High accuracy	With revolution counter	Long contact point	Standard	Double scale spacing	Compact	Dustproof	Carbide contact point	Ruby contact point
Basic set	Full set				One rev.	Hysteresis	Repeatability											
513-302-10E	**513-302-10T**	0.0005	0.03	0-15-0	±0.0005	0.0003	±0.0003	71	0.3 or less								✔	

* The accuracy is guaranteed when used with the dial face facing upward and the contact point oriented as shown in the figure.
Note: **513-3XX-10** is indicated on the dial face. But the Order No. for the set provided with the stem etc. has a suffix (E or T) at the end.

DIMENSIONS

Unit: mm

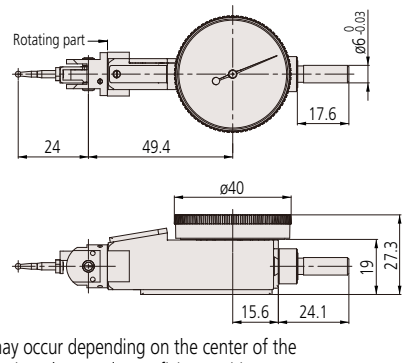

513-304-10E

Note: A slight difference may occur depending on the center of the contact point, graduation plate, and stem fixing position, etc.

Mitutoyo reserves the right to change any or all aspects of any product specification, including prices, designs and service content, without notice.

Pocket Type Dial Test Indicator SERIES 513

- Slim design is suited for measurement in deep holes.
- Visibility of the dial face has been greatly improved thanks to a universal font, the selected color of the dial face, and improved balance between the pointer and the thickness of scale lines. The length of the contact point is shown in the illustration on the dial face.
- The crystal surface is flat to reduce glare and is coated to prevent scratches, dirt, and reflections.
- Bonding the bezel and crystal together leaves no gap for cutting fluid or oil to penetrate through to the dial face. (Note that this type is NOT water-proof.)
- Clutch type (with a clutch lever)
- With ø2 mm Carbide contact point
- Metric Dial Test Indicator is inspected according to JIS B 7533:2015. We guarantee accuracy by inspecting with the dial face facing upward.



Graduation: 0.01 mm
Range: 0.8 mm

513-517-10E/
513-517-10T

- Standard
- Compact
- Carbide contact point

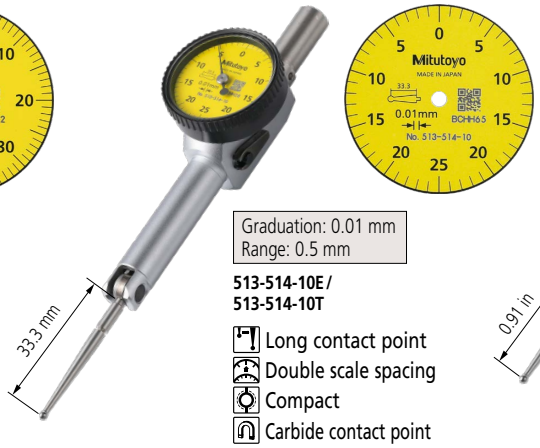

Graduation: 0.01 mm
Range: 0.5 mm

513-514-10E/
513-514-10T

- Long contact point
- Double scale spacing
- Compact
- Carbide contact point

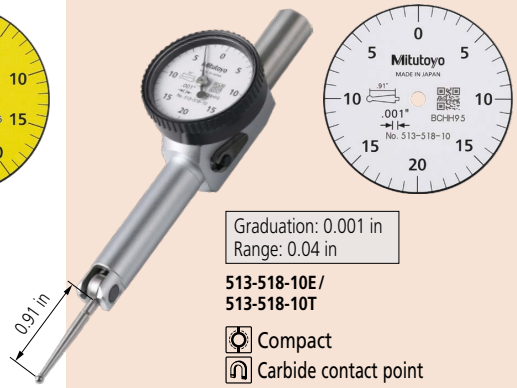

Graduation: 0.001 in
Range: 0.04 in

513-518-10E/
513-518-10T

- Compact
- Carbide contact point



Graduation: 0.01 mm
Range: 1 mm

513-515-10E/
513-515-10T

- Long contact point
- Compact
- Carbide contact point



Graduation: 0.002 mm
Range: 0.2 mm

513-503-10E/
513-503-10T

- Standard
- Compact
- Carbide contact point

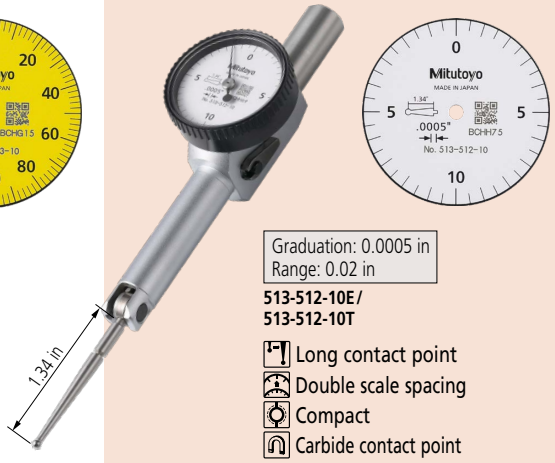

Graduation: 0.0005 in
Range: 0.02 in

513-512-10E/
513-512-10T

- Long contact point
- Double scale spacing
- Compact
- Carbide contact point



Graduation: 0.001 mm
Range: 0.14 mm

513-501-10E/
513-501-10T

- High accuracy
- Compact
- Carbide contact point

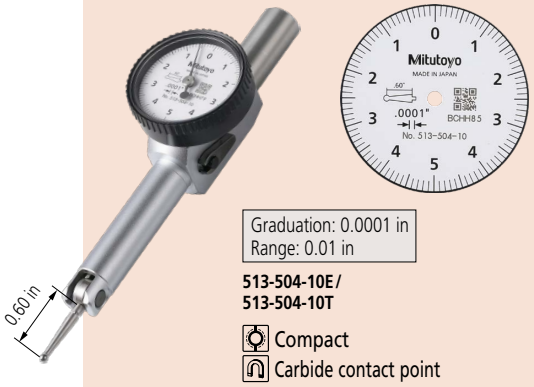

Graduation: 0.0001 in
Range: 0.01 in

513-504-10E/
513-504-10T

- Compact
- Carbide contact point

Mitutoyo reserves the right to change any or all aspects of any product specification, including prices, designs and service content, without notice.

SPECIFICATIONS

Metric

Order No.		Graduation (mm)	Range (mm)	Dial reading	Maximum permissible error (MPE)* (µm)					Mass (g)	Measuring force (N)	High accuracy	With revolution counter	Long contact point	Standard	Double scale spacing	Compact	Carbide contact point	Ruby contact point
Basic set	Full set				Measuring range	One rev.	10 scale divisions	Hysteresis	Repetability										
513-517-10E	513-517-10T	0.01	0.8	0-40-0	9	–	5	4	3	50	0.3 or less				✔		✔	✔	
513-514-10E	513-514-10T	0.01	0.5	0-25-0	10	–	5	5	3	51	0.3 or less			✔		✔	✔	✔	
513-515-10E	513-515-10T	0.01	1	0-50-0	10	–	5	5	3	51	0.3 or less			✔			✔	✔	
513-503-10E	513-503-10T	0.002	0.2	0-100-0	4	–	2	3	1	50	0.4 or less				✔		✔	✔	
513-501-10E	513-501-10T	0.001	0.14	0-70-0	4	–	2	3	1	50	0.5 or less	✔					✔	✔	

Inch

Order No.		Graduation (in)	Range (in)	Dial reading	Maximum permissible error (MPE)* (in)				Mass (g)	Measuring force (N)	High accuracy	With revolution counter	Long contact point	Standard	Double scale spacing	Compact	Carbide contact point	Ruby contact point
Basic set	Full set				One rev.	First 2.5 rev.	Hysteresis	Repetability										
513-518-10E	513-518-10T	0.001	0.04	0-20-0	±0.001	–	0.0002	±0.0004	50	0.3 or less						✔	✔	
513-512-10E	513-512-10T	0.0005	0.02	0-10-0	±0.0005	–	0.0002	±0.0002	51	0.3 or less			✔		✔	✔	✔	
513-504-10E	513-504-10T	0.0001	0.01	0-5-0	±0.0002	–	0.0001	±0.00004	50	0.3 or less						✔	✔	

* We guarantee the accuracy of completed products by inspecting them with the dial face facing upward.

Note 1: Be sure to perform calibration with reference gage, etc. after exchanging the contact point. The inside parts may be damaged when the contact point is exchanged due to the breakage. In the case the of the significant deterioration in the operation, repair is required.

Note 2: Stem is not included in the mass.

Note 3: **513-5XX-10** is indicated on the dial face. But the Order No. for the Special Set provided with the stem etc. has a suffix (E or T) at the end.

DIMENSIONS

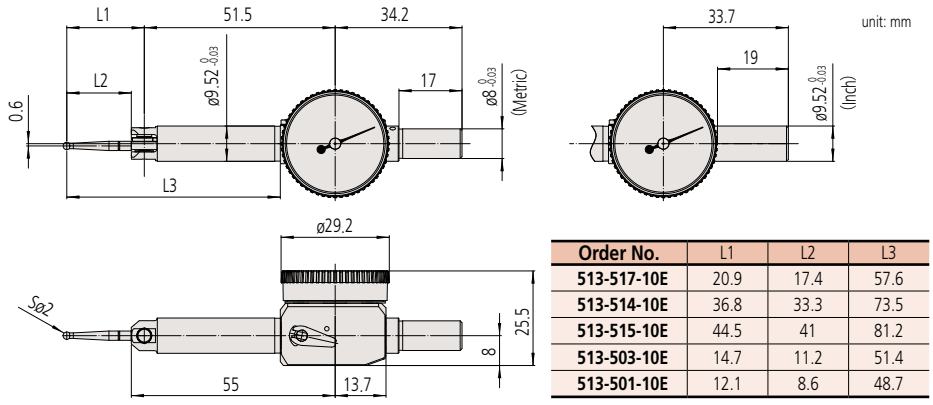

Order No.	L1	L2	L3
513-517-10E	20.9	17.4	57.6
513-514-10E	36.8	33.3	73.5
513-515-10E	44.5	41	81.2
513-503-10E	14.7	11.2	51.4
513-501-10E	12.1	8.6	48.7

Note: A slight difference may occur depending on the center of the contact point, graduation plate, and stem fixing position, etc.



Pocket type can be fixed at the body (at ø9.52)

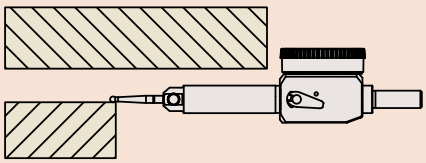

The slim body allows measurements in shallow space.

There are two types of Mitutoyo Dial Test Indicator:
The non-clutch type (without a clutch lever) and the clutch type (with a clutch lever)

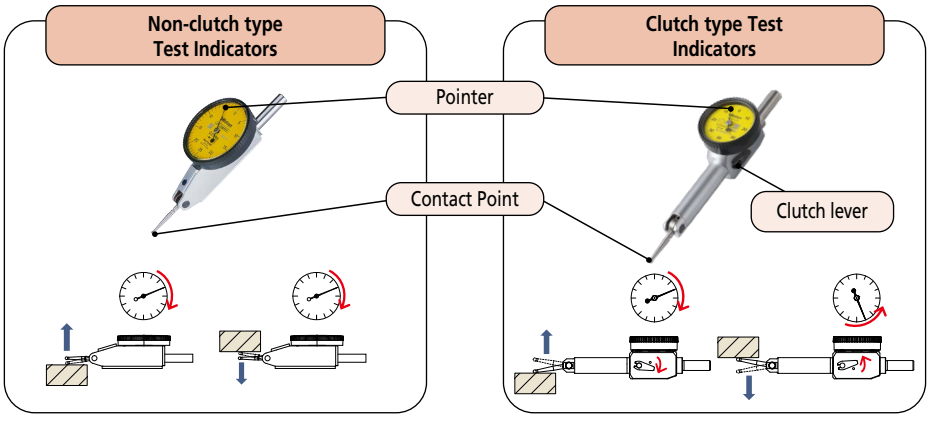

In the non-clutch type, although the contact point may move either in the upward or downward direction, the pointer always rotates clockwise.

In the clutch type, if the clutch lever is set in one position the contact point moves in the upward direction and the pointer rotates clockwise. Conversely, if the lever is set in the other position the contact point moves in the downward direction and the pointer rotates counterclockwise.

F

Contact points, Stems and Holders
Optional Accessories for Dial Test Indicators

Contact point (for Metric Models Only*)

* Except for universal type dial test indicator (**513-304-10**).

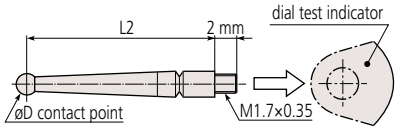

ø0.5 mm contact point (Steel)



190547 (L2=11.2 mm)
21CAB109 (L2=15.2 mm)
190549 (L2=17.4 mm)
190654 (L2=18.7 mm)
21CAB111 (L2=33.9 mm)
190656 (L2=41.0 mm)

ø0.7 mm contact point (Steel)



190548 (L2=11.2 mm)
21CAB110 (L2=15.2 mm)
190550 (L2=17.4 mm)
190653 (L2=18.7 mm)
21CAB112 (L2=33.9 mm)
190655 (L2=41.0 mm)

ø1 mm contact point (Carbide)



103017 (L2=11.2 mm)
131314 (L2=15.2 mm)
103013 (L2=17.4 mm)
137558 (L2=18.7 mm)
131316 (L2=33.9 mm)
136235 (L2=41.0 mm)

ø2 mm contact point (Carbide)



103010 (L2=11.2 mm)
103011 (L2=15.2 mm)
103006 (L2=17.4 mm)
137557 (L2=18.7 mm)
131324 (L2=33.9 mm)
136013 (L2=41.0 mm)

ø2 mm contact point (Ruby)



21CZA209 (L2=11.2 mm)
21CZB068 (L2=15.2 mm)
21CZA201 (L2=17.4 mm)
21CZA210 (L2=18.7 mm)
21CZA211 (L2=41.0 mm)

ø3 mm contact point (Carbide)



103018 (L2=11.2 mm)
131315 (L2=15.2 mm)
103014 (L2=17.4 mm)
137559 (L2=18.7 mm)
131317 (L2=33.9 mm)
136236 (L2=41.0 mm)

Spanner



102037

Holding Bars



9×9 mm
953638 (Length: 50 mm)
900209 (Length: 100 mm)



ø8 mm (0.315 inch DIA) **900211** (Length: 115 mm/4.528 in)



0.25 in×0.5 in
953639 (Length: 2 in)
900306 (Length: 4 in)

Swivel Clamps

For ø6 mm stem, ø8 mm stem, and dovetail



902053

For ø4 mm stem, ø8 mm stem, and dovetail



900321

For 0.157 inch DIA. stem, 0.375 inch DIA. stem, and dovetail



900322

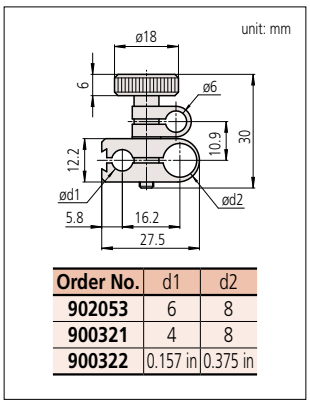

Order No.	d1	d2
902053	6	8
900321	4	8
900322	0.157 in	0.375 in

Stems with Knurled Clamp Ring

ø4 mm (0.157 inch DIA.)



21CZB131

ø8 mm



21CZB129

0.375 inch DIA.



21CZB130

Stem DIA. ød	Stem with dovetail (Individual item)	Nut (Individual item)	Full set (Stem with dovetail+Nut)
	Order No.		
ø4	21CAB106	190322	21CZB131
ø6	21CAB103	190322	21CZB128
ø8	21CAB104	190322	21CZB129
ø0.375 in	21CAB105	190322	21CZB130

Universal Holder (dovetail clamp)

- A universal holder is an attachment used to mount a dial test indicator in a machine tool spindle so that it can be used to align the spindle axis with a workpiece feature such as a hole center, or a machine axis with an edge. (See diagram below.) It also gives some protection against accidental impacts on the indicator.



21CZA233 (ø8 mm stem)
21CZA231 (0.25 inch DIA. stem)
21CZA229 (ø6 mm stem)

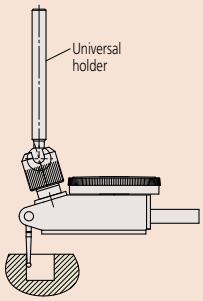

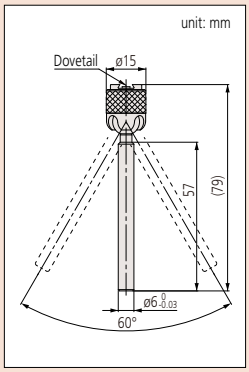

Centering Holder

- Allows large diameter cylinders or holes to be centered on a machine tool.

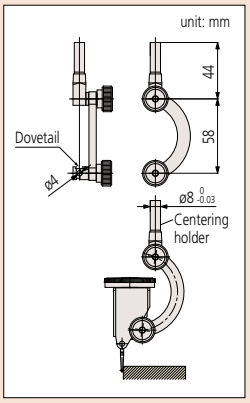



901959 (ø8 mm stem)
901997 (0.25 inch DIA. stem)

Mitutoyo reserves the right to change any or all aspects of any product specification, including prices, designs and service content, without notice.

Optional Accessories for Pocket Type Dial Test Indicators

Contact point (for Metric Models Only)

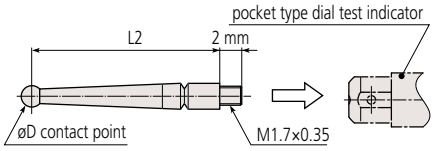

ø0.5 mm contact point (Steel)



190547 (L2=11.2 mm)
190549 (L2=17.4 mm)
190656 (L2=41.0 mm)

ø0.7 mm contact point (Steel)



190548 (L2=11.2 mm)
190550 (L2=17.4 mm)
190655 (L2=41.0 mm)

ø1 mm contact point (Carbide)



136756 (L2=8.6 mm)
103017 (L2=11.2 mm)
103013 (L2=17.4 mm)
137746 (L2=33.3 mm)
136235 (L2=41.0 mm)

ø2 mm contact point (Carbide)



136104 (L2=8.6 mm)
103010 (L2=11.2 mm)
103006 (L2=17.4 mm)
129949 (L2=33.3 mm)
136013 (L2=41.0 mm)

ø2 mm contact point (Ruby)



21CZA209 (L2=11.2 mm)
21CZA201 (L2=17.4 mm)
21CZA211 (L2=41.0 mm)

ø3 mm contact point (Carbide)



136758 (L2=8.6 mm)
103018 (L2=11.2 mm)
103014 (L2=17.4 mm)
137747 (L2=33.3 mm)
136236 (L2=41.0 mm)

Swivel Clamps

For ø6 mm stem, ø8 mm stem, and dovetail



902053

For ø4 mm stem and ø8 mm stem, and dovetail



900321

For 0.157 inch DIA. stem and 0.375 inch DIA. stem, and dovetail



900322

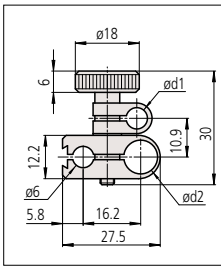

Order No.	d1	d2
902053	6	8
900321	4	8
900322	0.157 in	0.375 in

Stems

ø4 mm (0.157 inch DIA.) | **ø8 mm (0.315 inch DIA.)** | **0.375 inch DIA.**



102036 | **102822** | **102081**

Holding Bars



9×9 mm **900209** (Length: 100 mm)



ø8 mm (0.315 inch DIA) **900211** (Length: 115 mm)



0.25×0.5 in **953639** (Length: 2 in)
900306 (Length: 4 in)

Note: Suitable for height gages with a scriber section of 12.7×6.35 mm.

Spanner



301336

Universal Holder (screw clamp)

- A universal holder is an attachment used to mount a dial test indicator in a machine tool spindle so that it can be used to align the spindle axis with a workpiece feature such as a hole center, or a machine axis with an edge. (See diagram below.) It also gives some protection against accidental impacts on the indicator.



21CZA234 (ø8 mm stem)
21CZA232 (0.25 inch DIA. stem)
21CZA230 (ø6 mm stem)

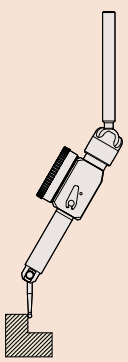

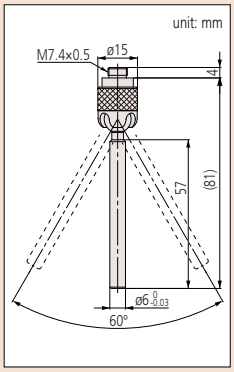

Mitutoyo reserves the right to change any or all aspects of any product specification, including prices, designs and service content, without notice.

i-Checker IC2000
SERIES 170

- Indication accuracy of (0.1 + 0.4L/100) µm, the highest level in the world, is achieved. (When inspected in the vertical orientation.)
- Can directly inspect indicators with a stroke of up to 100 mm. Moreover, a wide variety of optional accessories enable the inspection and calibration of many types of gage including dial indicators, lever-type dial indicators, dial test indicators, cylinder gages, Digimatic indicators, linear gages and electronic micrometers that use various stem diameters and support systems.
- The pointer of the analog indicator is positioned just before the measuring point automatically in the semi-automatic mode.
- Digital indicators equipped with a data output function are checked very efficiently due to spindle positioning at the inspection points and recording of measurement results being under fully automatic control.

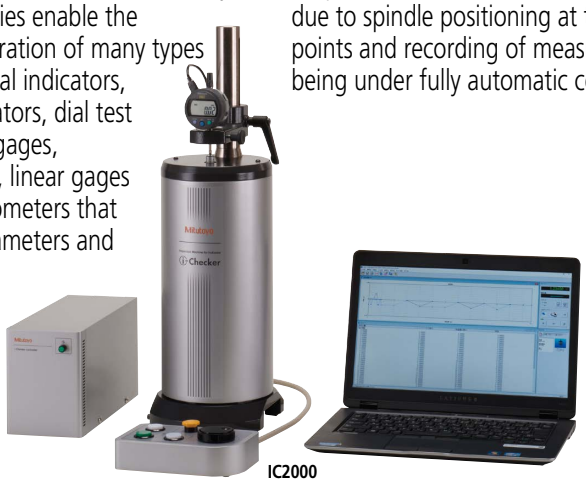

IC2000

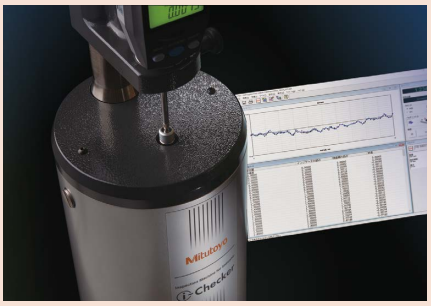

Typical application for Dial Test Indicator Accessory Set



Typical application using dial test indicator attachment set (**02ASK000**)

SPECIFICATIONS

Order No.		170-402	170-403
Remarks		with 8 mm bush	with 3/8 in bush
Measuring Range		100 mm	
Resolution		0.01 µm	
Accuracy (20 °C)	vertical orientation	(0.1 + 0.4L/100) µm L=Arbitrary length (mm)	
	lateral orientation	(0.15 + 0.6L/100) µm L=Arbitrary length (mm)	
Feed speed		Maximum 10 mm/s	
Drive method		Motor drive (semi-automatic/fully-automatic)	
Measuring Unit		Separate type Linear Encoder	
Measurement method		Semi-automatic measurement	
		Fully automatic measurement (only when using an indicator equipped with data output function)*1*2	
Mass		20 kg	
Operating temperature range		20 °C±0.5 °C	

*1 Automatic measurement requires the indicator's connecting cable. Additionally some form of indicator, along with the normally connected accessory (the optional accessory for the indicator such as a Digimatic power-supply unit in an EF counter) will be required.
*2 The indicator measured via RS-232C has the capability to receive data from the main unit and output the counter value.

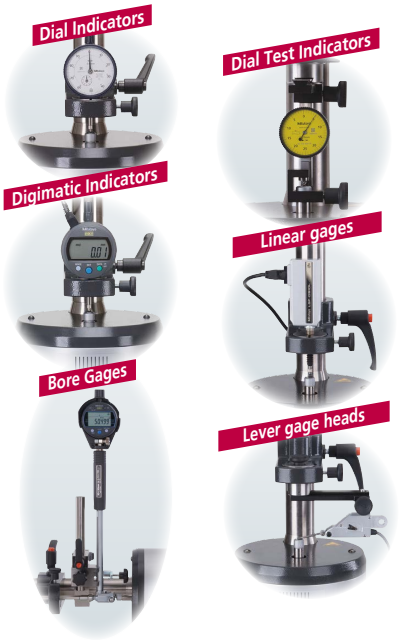

DIMENSIONS

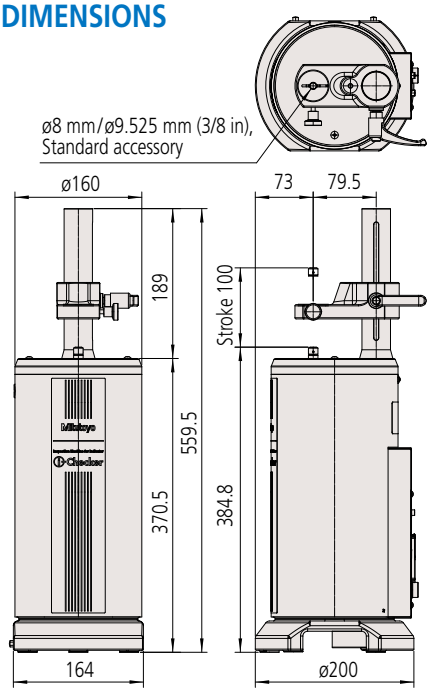



Refer to the i-Checker Brochure (**E12015**) for more details.

Mitutoyo reserves the right to change any or all aspects of any product specification, including prices, designs and service content, without notice.

Optional accessory

Stand for bore gage inspection (**12AAK824**)
Note: Can be used for the inspection of bore gages 511 SERIES standard type and with micrometer head up to 400 mm. (Refer to pages C-35 and C-42 for details.)

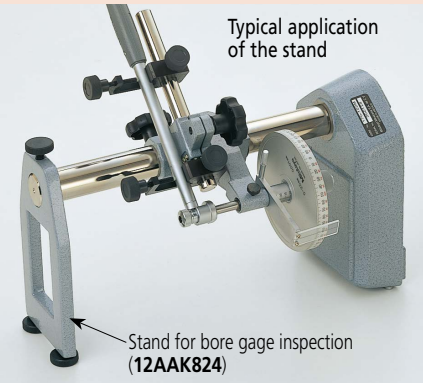



SERIES 170 — UDT-2 Dial Indicator Tester

- **UDT-2** is the accuracy tester for 0.01 mm resolution/graduation dial indicators, dial test indicators and bore gages.
- Stem mounting hole: ø6, ø8 mm (Metric) ø1/4 in, ø3/8 in (Inch)



170-102-12

SPECIFICATIONS

Metric

Order No.	Micrometer head		Accuracy (µm)	
	Graduation (mm)	Range (mm)	Feed accuracy (25 mm stroke)	Hysteresis
170-102-12	0.001	0 - 25	±2	0.5

Inch

Order No.	Micrometer head		Accuracy (in)	
	Graduation (in)	Range (in)	Feed accuracy (25 mm stroke)	Hysteresis
170-101-10	0.0001	0 - 1	±0.0001	0.00002

SERIES 521 — Calibration Tester

- Can also be used to inspect dial indicators and dial test indicators with 0.001 mm graduations, or to adjust the sensitivity of electronic micrometers.
- The mounting bracket, which can move in any direction, accepts a wide range of indicator stem sizes (ø4 mm to ø10 mm).



521-103

SPECIFICATIONS

Metric

Order No.	Micrometer head		Accuracy (µm)	
	Graduation (mm)	Range (mm)	Indication accuracy	Hysteresis
521-103	0.0002	0 - 1	±0.2	0.2
521-105	0.0002	0 - 5	±0.8	0.8

Inch

Order No.	Micrometer head		Accuracy (in)	
	Graduation (in)	Range (in)	Indication accuracy	Hysteresis
521-104	0.00001	0 - 0.05	±0.00001	0.00001
521-106	0.00001	0 - 0.2	±0.00003	0.00003

Mitutoyo reserves the right to change any or all aspects of any product specification, including prices, designs and service content, without notice.

MeasurLink® ENABLED
Data Management Software by Mitutoyo

Thickness Gages
SERIES 547, 7

- With a single touch, the dial thickness gage can quickly measure the thickness of small parts, paper, felt, etc.
- For models using a ceramic contact and anvil, there is no need to worry about rust.
- Watertight assembly of bezel and crystal prevents water or oil from penetrating the dial indicator.

Standard Type (Resolution: 0.01 mm)



547-301A



547-321A

High Accuracy Type (Resolution: 0.0005 mm)



547-401A

Standard Type (Graduation: 0.01 mm)



7301A



7321A

DIMENSIONS

Unit: mm

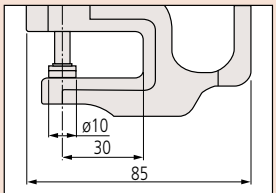

7301A, 7305A, 7327A, 547-301A, 547-526S, 547-300A, 547-500S

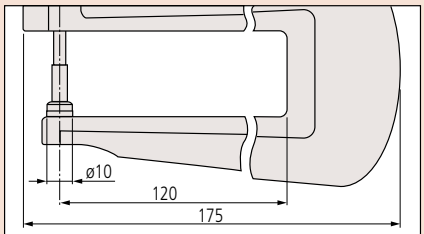

7321A, 7323A, 7322A, 547-321A, 547-320S,547-520S

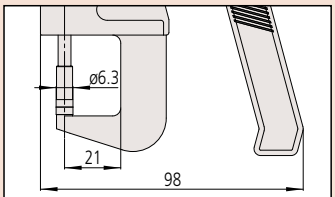

547-401A, 547-400A

F

Mitutoyo reserves the right to change any or all aspects of any product specification, including prices, designs and service content, without notice.

- Display: 6-digit LCD, sign
  (7-digit for models with 0.0005 mm resolution)
- Battery: CR2032 (1 pc.), for initial operational checks (standard accessory)
- Battery life: Approx. 2.5 years under normal use
  Approx. 2,700 hours of continuous use
- Maximum response speed: Not restricted (except for scanning measurement)
- Zero-setting (INC system)
- Presetting (ABS system)
- Measuring direction switching
- Tolerance judgment
- Resolution switching (For **547-401A** and **547-400A**)
- Function Lock
- Calibration schedule warning function
- Data output
- Display value holding (when no external device is connected)
- 330° rotary display
- Low battery voltage alarm display
- Error alarm display

Optional Accessories

- SPC Cable:
  06AGL011 (1 m)
  02AGL021 (2 m)
- USB Input Tool Direct (2 m): **06AGQ001F**

Note: A **06AGQ001F** is necessary for each **ID**.

- Measurement Data Management USB-ITPAK V3.0: **06AGR543**
- Input Tool Series
  IT-020U (USB Keyboard Signal Conversion Type): **264-020**
  IT-007R (RS-232C Communication Conversion Type): **264-007**
- Connecting Cables for **U-WAVE-T** (160 mm): **02AZG011**
  For foot switch: **02AZG021**
- Digimatic Mini-Processor **DP-1VA LOGGER**: **264-505**

Lens thickness measurement

- Thickness of concave-convex lenses and surfaces can be measured. (Contact point, Anvil: hardened steel)
- Anvils and contact points are interchangeable to enable concave surfaces to be measured.
- Provided with a ball point as standard.



547-313A **7313A**

DIMENSIONS

Unit: mm

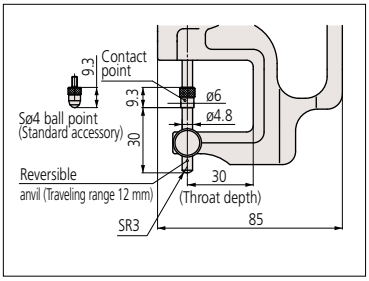

Typical applications

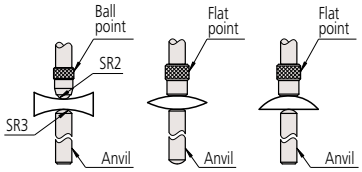

Pipe gage measurement

- Pipe wall thickness, thickness of curved boards can be measured. (Contact point, Anvil: hardened steel)



547-360A **7360A**

DIMENSIONS

Unit: mm

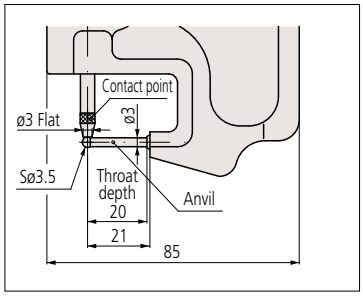

Blade thickness measurement

- Ideal for measuring narrow grooves on round objects.
- The measuring faces of the contact point and anvil are in the shape of a 1 mm-thick blade.



547-315A **7315A**

DIMENSIONS

Unit: mm

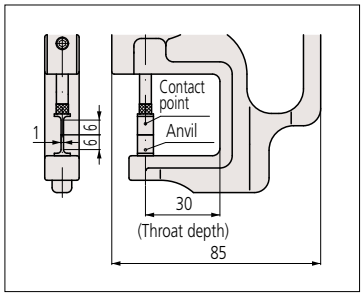

F

Mitutoyo reserves the right to change any or all aspects of any product specification, including prices, designs and service content, without notice.

Thickness Gages
SERIES 547, 7

SPECIFICATIONS

Metric

Order No.	Resolution (mm)	Range (mm)	Measuring depth (mm)	Contact point, Anvil (mm)	Parallelism of Contact point, Anvil (µm)	Accuracy (µm)	Measuring force (N)	Mass (g)	Remarks
547-401A	0.0005 (0.001/0.01 selectable)	0 - 12	21	ø6.3 Flat (Carbide)	3	±3	3.5 or less	275	High accuracy, carbide point anvil
547-301A	0.01	0 - 10	30	ø10 Flat	10	±20	1.5 or less	245	Standard, ceramic point/anvil
547-321A	0.01	0 - 10	120	ø10 Flat	10	±20	1.5 or less	385	Deep throat, ceramic point/anvil
547-313A	0.01	0 - 10	30	ø6 Flat (Contact point) ø4.8 Flat (Anvil)	10	±20	1.5 or less	265	Lens thickness
547-315A	0.01	0 - 10	30	t=1 Blade	10	±20	1.5 or less	260	Blade thickness
547-360A	0.01	0 - 10	20	ø3 Flat (Contact point) ø3.5 Ball (Anvil)	—	±20	1.5 or less	230	Pipe gage

Inch/Metric

Order No.	Resolution	Range (in)	Measuring depth	Contact point, Anvil	Parallelism of Contact point, Anvil	Accuracy	Measuring force (N)	Mass (g)	Remarks
547-400A	0.00002/0.00005/ 0.0001/0.0005 in 0.0005/0.001/ 0.01 mm (selectable)	0 - 0.47	21 mm (0.83 in)	ø6.3 mm (ø0.25 in) Flat	0.0001 in/0.003 mm	±0.00012 in/±3 µm	3.5 or less	275	High accuracy, carbide point anvil
547-526S*	0.0001 in/0.001 mm	0 - 0.47*	30 mm (1.18 in)	ø10 mm (ø0.39 in) Flat	0.0002 in/0.005 mm	±0.0002 in/±5 µm	1.5 or less	225	Standard, ceramic point/anvil
547-300A	0.0005 in/0.01 mm	0 - 0.4	30 mm (1.18 in)	ø10 mm (ø0.39 in) Flat	0.005 in/0.01 mm	±0.001 in/±20 µm	1.5 or less	245	Standard, ceramic point/anvil
547-500S*	0.0005 in/0.01 mm	0 - 0.47*	30 mm (1.18 in)	ø10 mm (ø0.39 in) Flat	0.005 in/0.01 mm	±0.001 in/±20 µm	1.5 or less	225	Standard, ceramic point/anvil
547-320A	0.0005 in/0.01 mm	0 - 0.4	120 mm (4.72 in)	ø10 mm (ø0.39 in) Flat	0.005 in/0.01 mm	±0.001 in/±20 µm	1.5 or less	385	Deep throat, ceramic point/anvil
547-520S*	0.0005 in/0.01 mm	0 - 0.47*	120 mm (4.72 in)	ø10 mm (ø0.39 in) Flat	0.005 in/0.01 mm	±0.001 in/±20 µm	1.5 or less	380	Deep throat, ceramic point/anvil
547-312A	0.0005 in/0.01 mm	0 - 0.4	30 mm (1.18 in)	ø6 mm (ø0.24 in) Flat (Contact point) ø4.8 mm (ø0.19 in) Flat (Anvil)	0.005 in/0.01 mm	±0.001 in/±20 µm	1.5 or less	265	Lens thickness
547-512A*	0.0005 in/0.01 mm	0 - 0.47*	30 mm (1.18 in)	ø6 mm (ø0.24 in) Flat (Contact point) ø4.8 mm (ø0.19 in) Flat (Anvil)	0.005 in/0.01 mm	±0.001 in/±20 µm	1.5 or less	240	Lens thickness
547-316A	0.0005 in/0.01 mm	0 - 0.4	30 mm (1.18 in)	t=1 mm (0.04 in) Blade	0.005 in/0.01 mm	±0.001 in/±20 µm	1.5 or less	260	Blade thickness
547-516A*	0.0005 in/0.01 mm	0 - 0.47*	30 mm (1.18 in)	t=1 mm (0.04 in) Blade	0.005 in/0.01 mm	±0.001 in/±20 µm	1.5 or less	240	Blade thickness
547-361A	0.0005 in/0.01 mm	0 - 0.4	20 mm (0.79 in)	ø3 mm (ø0.12 in) Flat (Contact point) ø3.5 mm (ø0.14 in) Ball (Anvil)	—	±0.001 in/±20 µm	1.5 or less	230	Pipe gage
547-561S	0.0005 in/0.01 mm	0 - 0.47*	20 mm (0.79 in)	ø3 mm (ø0.12 in) Flat (Contact point) ø3.5 mm (ø0.14 in) Ball (Anvil)	—	±0.001 in/±20 µm	1.5 or less	215	Pipe gage

* Using ID-SX Digimatic indicator.

Metric

Order No.	Graduation (mm)	Range (mm)	Measuring depth (mm)	Contact point, Anvil (mm)	Parallelism of Contact point, Anvil (µm)	Accuracy (µm)	Measuring force (N)	Mass (g)	Remarks
7327A	0.001	0 - 1	30	ø10 Flat	5	±5	1.5 or less	225	Fine dial reading, ceramic point/anvil
7301A	0.01	0 - 10	30	ø10 Flat	5	±15	1.4 or less	205	Standard, ceramic point/anvil
7305A	0.01	0 - 20	30	ø10 Flat	5	±20	2.0 or less	220	Standard, ceramic point/anvil
7321A	0.01	0 - 10	120	ø10 Flat	5	±15	1.4 or less	370	Deep throat, ceramic point/anvil
7323A	0.01	0 - 20	120	ø10 Flat	5	±22	2.0 or less	370	Deep throat, ceramic point/anvil
7313A	0.01	0 - 10	30	ø6 Flat (Contact point) ø4.8 Flat (Anvil)	5	±15	1.4 or less	210	Lens thickness
7315A	0.01	0 - 10	30	t=1 Blade	5	±15	1.4 or less	220	Blade thickness
7360A	0.01	0 - 10	20	ø3 Flat (Contact point) ø3.5 Ball (Anvil)	—	±15	1.4 or less	200	Pipe gage

Inch

Order No.	Graduation (in)	Range (in)	Measuring depth (in)	Contact point, Anvil (in)	Parallelism of Contact point, Anvil (in)	Accuracy (in)	Measuring force (N)	Mass (g)	Remarks
7326A	0.0001	0 - 0.05	1.18	ø0.39 Flat	0.0002	±0.0002	2.0 or less	205	Fine dial reading, ceramic point/anvil
7300A	0.001	0 - 0.5	1.18	ø0.39 Flat	0.0005	±0.001	1.8 or less	205	Standard, ceramic point/anvil
7304A	0.001	0 - 1	1.18	ø0.39 Flat	0.0005	±0.002	1.8 or less	220	Standard, ceramic point/anvil
7322A	0.001	0 - 1	4.72	ø0.39 Flat	0.0005	±0.002	1.8 or less	370	Deep throat, ceramic point/anvil
7312A	0.001	0 - 0.5	1.18	ø0.24 Flat (Contact point) ø0.19 Flat (Anvil)	0.0005	±0.001	1.8 or less	215	Lens thickness
7316A	0.001	0 - 0.5	1.18	t=0.04 Blade	0.0005	±0.001	1.8 or less	220	Blade thickness
7361A	0.001	0 - 0.5	0.8	ø0.12 Flat (Contact point) ø0.14 Ball (Anvil)	—	±0.001	1.8 or less	200	Pipe gage

Note: The dial indicator needs to be reset when a contact point is replaced.

Mitutoyo reserves the right to change any or all aspects of any product specification, including prices, designs and service content, without notice.

Measuring contact force on a relay

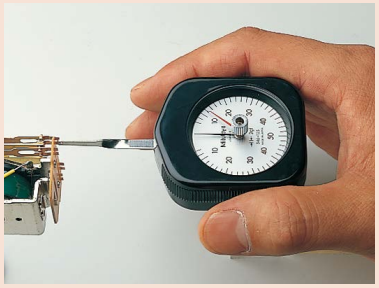

Contact Force Gage SERIES 546

- Contact Force Gages are widely used to determine the measuring force applied by an instrument to a workpiece, as well as contact forces of electrical relays, micro-switches, valves and precision springs.
- Thanks to the miniature anti-friction bearing in the fulcrum, stable measurement is guaranteed.
- 2 types are available: Standard and peak hold.



Standard type
546-112



Standard type
546-119



Peak hold type
546-137

DIMENSIONS

Unit: mm

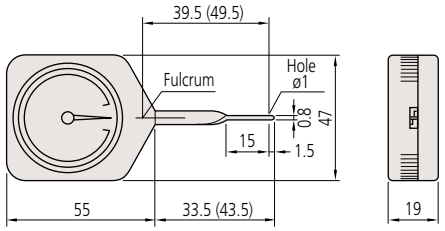

( ): **546-112**, **546-113**, **546-133**

SPECIFICATIONS

mN-scale models

Standard

Order No.	Graduation (mN)	Range (mN)	Accuracy (graduation)
546-112	2	6 - 50	±0.5
546-113	5	10 - 100	
546-114	10	30 - 300	

Peak hold

Order No.	Graduation (mN)	Range (mN)	Accuracy (graduation)
—	—	—	—
546-133	5	10 - 100	±0.5
546-134	10	30 - 300	

Note: Please note that these products are only available in their standard forms; they cannot be customized for special sizes or specifications.

N-scale models

Standard

Order No.	Graduation (N)	Range (N)	Accuracy (graduation)
546-115	0.02	0.06 - 0.5	±0.5
546-116	0.05	0.1 - 1	
546-117	0.05	0.15 - 1.5	
546-118	0.1	0.3 - 3	
546-119	0.2	0.6 - 5	

Peak hold

Order No.	Graduation (N)	Range (N)	Accuracy (graduation)
546-135	0.02	0.06 - 0.5	±0.5
546-136	0.05	0.1 - 1	
546-137	0.05	0.15 - 1.5	
546-138	0.1	0.3 - 3	
546-139	0.2	0.6 - 5	

Note: Please note that these products are only available in their standard forms; they cannot be customized for special sizes or specifications.

F

Mitutoyo reserves the right to change any or all aspects of any product specification, including prices, designs and service content, without notice.

Mitutoyo

Dial Snap Gage
SERIES 201

- Enables single-handed comparison measurement of cylinder diameters, etc. even during machining.
- Measuring faces: Carbide.
- The anvil gage head can be moved up to 25 mm by turning the adjustment nut.
- The anvil gage head position can be fixed by turning the clamp.
- The gage head on the dial indicator side can be moved up to 2 mm.
- Equipped with workpiece support.
- Flatness of measuring face: 1 µm
- Repeatability of indication: 2 µm or better (repeatability of indicators is not included)
- The dial indicator and dial protection cover are optional. Also, some dial indicators and dial protection covers cannot be used with the dial snap gage. Consult Mitutoyo if intending to use dial indicators which are not recommended.



201-101

Note: The dial indicator and dial protection cover are optional.

Optional accessories
Dial protection cover: **21DZA000**

Recommended dial indicators / Digimatic indicators (optional)
- Metric models:
  2046AB: Dial indicator (Graduation: 0.01 mm)
  2109AB-10: Dial indicator (Graduation: 0.001 mm)
  543-700B: Digimatic Indicator (Resolution: 0.0005/0.001/0.01 mm)
- Inch models:
  2414AB: Dial indicator (Graduation: 0.001 in)
  2805AB-10: Dial indicator (Graduation: 0.0001 in)
  543-702B: Digimatic Indicator (Resolution: 0.00002/0.00005/0.0001/0.0005 in (0.0005/0.001/0.01 mm))

SPECIFICATIONS

Metric

Order No.	Range (mm)	Parallelism (µm)	Measuring force* (N)
201-101	0 - 25	5	15±3
201-102	25 - 50		
201-103	50 - 75		
201-104	75 - 100		
201-105	100 - 125		
201-106	125 - 150		
201-107	150 - 175		
201-108	175 - 200		
201-109	200 - 225		
201-110	225 - 250		
201-111	250 - 275		
201-112	275 - 300		

Inch

Order No.	Range (in)	Parallelism (in)	Measuring force* (N)
201-151	0 - 1	0.00025	15±3
201-152	1 - 2		
201-153	2 - 3		
201-154	3 - 4		
201-155	4 - 5		
201-156	5 - 6		
201-157	6 - 7		
201-158	7 - 8		
201-159	8 - 9		
201-160	9 - 10		
201-161	10 - 11		
201-162	11 - 12		

* Measuring force is that force present before an indicator is installed and is determined at the point where the spindle is retracted 1 mm from the rest position.

DIMENSIONS

Unit: mm

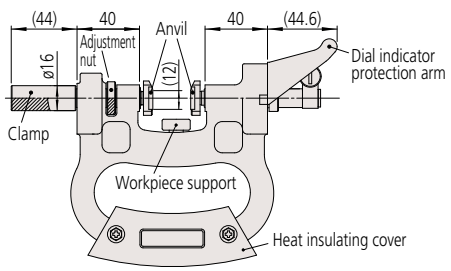

Mitutoyo reserves the right to change any or all aspects of any product specification, including prices, designs and service content, without notice.

SERIES 7 — Magnetic Stands

- Mitutoyo's Magnetic Stands clamp to iron or steel surfaces with a strong magnetic force that is switchable ON or OFF to allow easy mounting and dismounting.
- Vertical/horizontal mounting holes and bushes are available for attaching dial test indicators and dial indicators*.
- In addition, models **7014-10**, **7014E-10**, **7031-10**, **7032-10** and **7033-10** have a dovetail groove in the swivel holder for attaching dial test indicators that are equipped with a dovetail.

* Recommended dial indicators: compact and lightweight



7010-10



7011-10



7012-10



7014-10
(magnetic clamping is non-switchable)



7033-10



7031-10



7032-10

F

DIMENSIONS

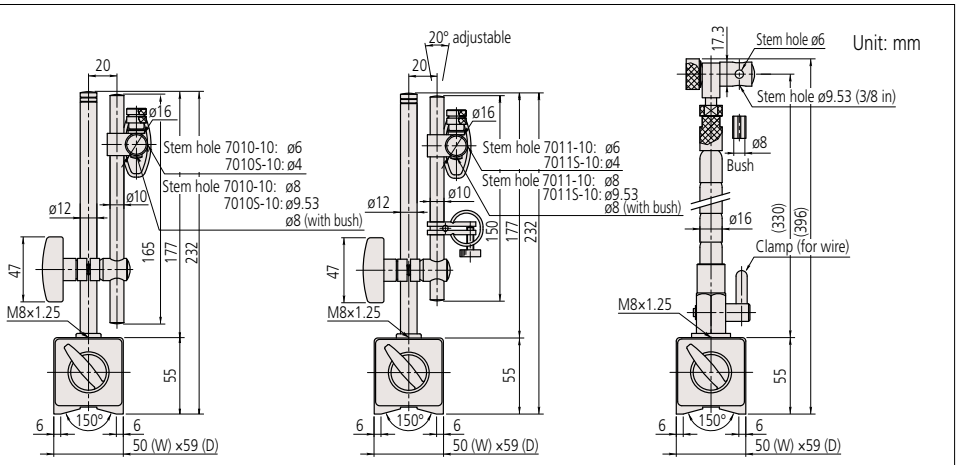

7010-10, 7010S-10 **7011-10, 7011S-10** **7012-10**

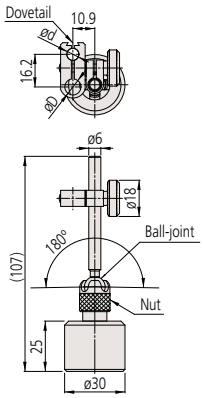

7014-10, 7014E-10

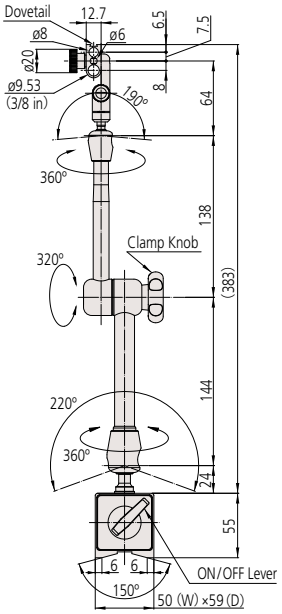

7033-10

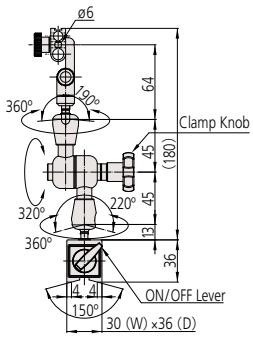

7031-10

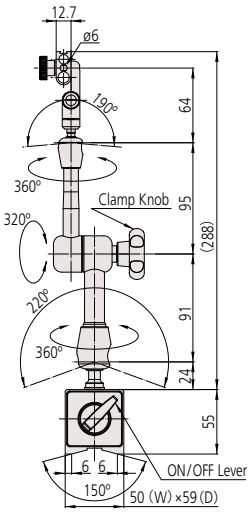

7032-10

Order No.	D	d
7014-10	8	6
7014E-10	9.53 (3/8 in)	4

SPECIFICATIONS

Order No.	Description	Applicable holding stem sizes	Magnetic force*1	Remarks
7010-10*2*3	Magnetic stand	ø6 mm, ø8 mm	Approx. 600 N	—
7010S-10*2*3	Magnetic stand	ø4 mm, ø8 mm, ø9.53 mm (3/8 in)	Approx. 600 N	—
7011-10*2*3	Magnetic stand	ø6 mm, ø8 mm	Approx. 600 N	With fine adjustment
7011S-10*2*3	Magnetic stand	ø4 mm, ø8 mm, ø9.53 mm (3/8 in)	Approx. 600 N	With fine adjustment
7012-10*4	Magnetic stand	ø6 mm, ø8 mm, ø9.53 mm (3/8 in)	Approx. 600 N	—
7014-10*4	Mini magnetic stand	ø6 mm, ø8 mm, with dovetail	Approx. 150 N	Without magnet ON/OFF
7014E-10*2*3	Mini magnetic stand	ø4 mm, ø9.53 mm (3/8 in)	Approx. 150 N	Without magnet ON/OFF
7031-10	Universal magnetic stand	ø6 mm, ø8 mm, ø9.53 mm (3/8 in), with dovetail	Approx. 300 N	With mechanical locking system
7032-10	Universal magnetic stand	ø6 mm, ø8 mm, ø9.53 mm (3/8 in), with dovetail	Approx. 600 N	With mechanical locking system
7033-10	Universal magnetic stand	ø6 mm, ø8 mm, ø9.53 mm (3/8 in), with dovetail	Approx. 600 N	With mechanical locking system

*1 The magnetic holding force applies to that needed for vertical separation from a thick and flat steel object.
*2 Back plunger type (**1160A**, etc.) cannot be attached.
*3 When attaching a compact dial indicator (outer frame diameter 31, 36 or 40 mm), select a back cover type with a lug.
*4 Use with a dial test indicator or SERIES 1 dial indicator (compact or lightweight type) is recommended.

Mitutoyo reserves the right to change any or all aspects of any product specification, including prices, designs and service content, without notice.

Dial Gage Stands
SERIES 7

- A convenient supporting stand for enabling a dial indicator to be used for comparative height or thickness measurements.
- Anvil: ø58 mm for **7001-10**, **7002-10** 90×90 mm for **7007-10**.
- Vertical fine adjustment is available with one-touch control thanks to the parallel spring suspension.



7001-10
(with ø58 mm serrated anvil)



7002-10
(with ø58 mm non-serrated anvil)



7007-10
(with 90 mm square semi-serrated anvil)

Mitutoyo reserves the right to change any or all aspects of any product specification, including prices, designs and service content, without notice.

DIMENSIONS

Unit: mm

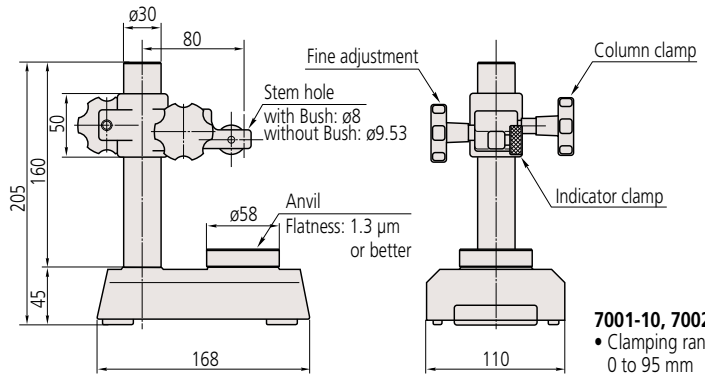

7001-10, 7002-10
- Clamping range on column: 0 to 95 mm

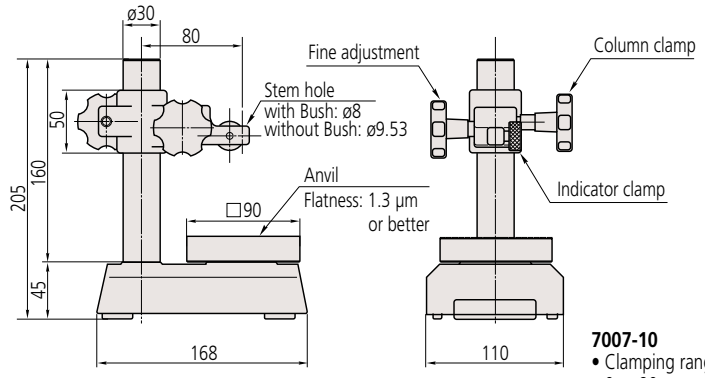

7007-10
- Clamping range on column: 0 to 90 mm

SPECIFICATIONS

Metric

Order No.	Stem hole (mm)	Remarks
7001-10	ø8, ø9.53	With serrated anvil
7002-10	ø8, ø9.53	With flat anvil
7007-10	ø8, ø9.53	With square anvil

Note 1: Perpendicularity of the stem hole to the anvil is better than 0.4 mm/100 mm
Note 2: Take note that when mounting high-accuracy Linear Gages (with resolution of 0.1 µm or better) to these stands, accuracy may be affected depending on the perpendicularity of the mounting hole to the top surface of the anvil (cosine effect).
Note 3: Compact dial indicators (bezel ø31, ø36) are not suitable for use with these stands.

Accessories (for 7001-10, 7002-10)

101462: Hardened steel serrated anvil (standard accessory for **7001-10**)

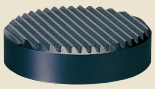

101462

Hardened steel

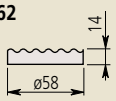

101461: Hardened steel non-serrated anvil (standard accessory for **7002-10**)

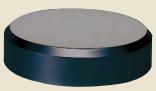

101461

Hardened steel

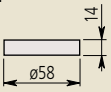

101463: Hardened steel domed anvil*
* Not available for **7007-10**. (optional)



101463

Hardened steel

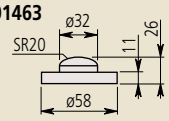

F

Mitutoyo reserves the right to change any or all aspects of any product specification, including prices, designs and service content, without notice.

Accessories for 215-156-10

- **21JAA329**: ø8 mm bush (standard accessory)
- **21JAA330**: ø9.53 mm (3/8 in) bush (standard accessory)
- **21JAA331**: ø15 mm bush (optional accessory)

SERIES 215 — Granite Base Comparator Stands

- The base is made of black granite that stays free of burrs and build-ups due to its fine-grain composition.
- Easy maintenance due to the non-rusting base.
- The stability of the granite base assures long-lasting flatness accuracy.



215-150-10



215-151-10



215-153-10



215-156-10

SPECIFICATIONS

Order No.	Granite base size (W×D×H) (mm)	Clamping range (mm)	Stem hole (mm)	Remarks
215-150-10	120×180×50	110	ø8, ø9.53	With fine adjustment of 1 mm range
215-151-10	150×200×50	250	ø8, ø9.53	With fine adjustment of 1 mm range
215-153-10	200×250×80	260	ø8, ø9.53	With fine adjustment of 1 mm range
215-156-10	300×250×80	275	ø8, ø9.53, ø20	With fine adjustment over entire travel

Note 1: Perpendicularity of the stem hole to the anvil is better than 0.2 mm/100 mm.
Note 2: Take note that when mounting high-accuracy Linear Gages (with resolution of 0.1 µm or better) to these stands, accuracy may be affected depending on the perpendicularity of the mounting hole to the top surface of the anvil (cosine effect).
Note 3: Compact dial indicators (bezel ø31, ø36) are not suitable for use with these stands.

Mitutoyo reserves the right to change any or all aspects of any product specification, including prices, designs and service content, without notice.

DIMENSIONS

Unit: mm

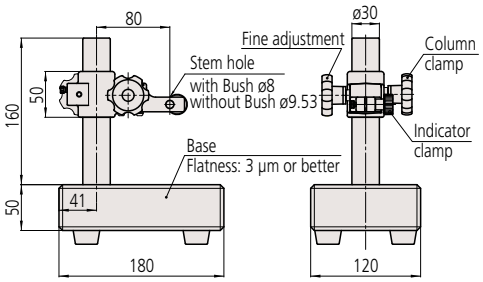

215-150-10
• Clamping range on column: 0 to 110 mm

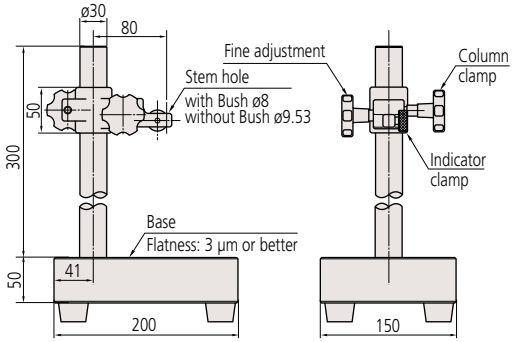

215-151-10
• Clamping range on column: 0 to 250 mm

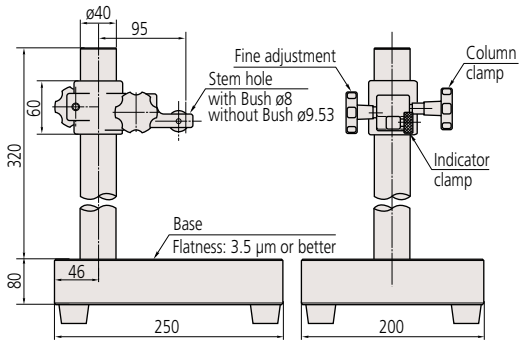

215-153-10
• Clamping range on column: 0 to 260 mm

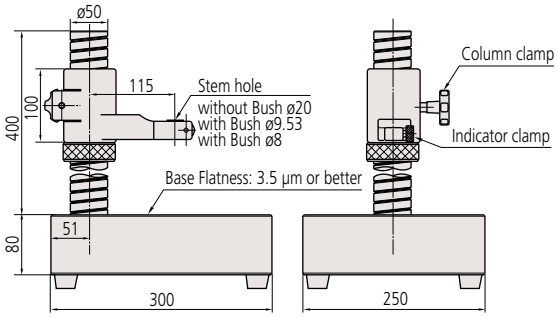

215-156-10
• Clamping range on column: 0 to 275 mm

Mitutoyo reserves the right to change any or all aspects of any product specification, including prices, designs and service content, without notice.

SERIES 215 — Cast Iron Base Comparator Stands



Typical application using Digimatic Indicator **ID-H**.

- These stands have a very stable cast-iron base that enables precise measurement.
- The semi-serrated anvil prevents very flat workpieces from wringing to it and the 2.3 µm flatness (or better) promotes accurate measurement.
- With an integrated indicator mounting section and arm, the bracket for **BSC-30HX** provides further improved rigidity, making it easy to adjust parallelism.
- **BSB-20X** uses a square 110 mm×110 mm serrated anvil while **BSC-30HX** uses a square 150 mm×150 mm serrated anvil.



215-405-10

Accessories for 215-505-10

- **21JAA329**: ø8 mm bush (standard accessory)
- **21JAA330**: ø9.53 mm (3/8 in) bush (standard accessory)
- **21JAA331**: ø15 mm bush (optional accessory)

SPECIFICATIONS

Order No.	Anvil	Micromotion mechanism (Adjustment range)	Stem hole (mm)
215-405-10	Square semi-serrated anvil (110×110 mm)	Vertical fine adjustment (1 mm)	ø9.53, ø8 with Bush
215-505-10	Square semi-serrated anvil (150×150 mm)	Micromotion screw	ø20, ø9.53 with Bush, ø8 with Bush

Note 1: Perpendicularity of the stem hole to the anvil is better than 0.4 mm/100 mm.
Note 2: Take note that when mounting high-accuracy Linear Gages (with resolution of 0.1 µm or better) to these stands, accuracy may be affected depending on the perpendicularity of the mounting hole to the top surface of the anvil (cosine effect).
Note 3: Compact dial indicators (bezel ø31, ø36) are not suitable for use with these stands.

DIMENSIONS

Unit: mm

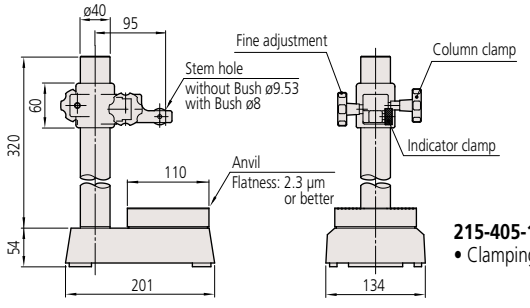

215-405-10
- Clamping range on column: 0 to 235 mm

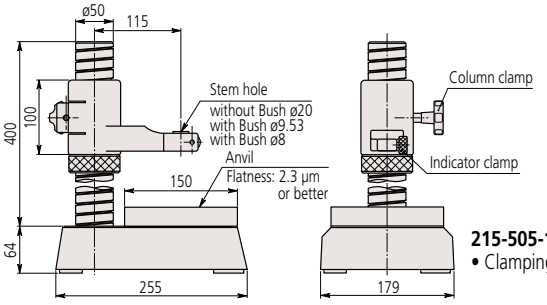

215-505-10
- Clamping range on column: 0 to 275 mm

F

Mitutoyo reserves the right to change any or all aspects of any product specification, including prices, designs and service content, without notice.

Mitutoyo

SERIES 519 — Transfer Stands

- Transfer Stands are designed for comparison measurements of size using a dial indicator or Digimatic Indicator.



519-109-10
(with a serrated anvil)

SPECIFICATIONS

Metric

Order No.	Clamping range on column (mm)	Micromotion adjustment range (mm)	Stem hole (mm)
519-109-10	0 to 320	1	ø9.53, ø8 with Bush

Note 1: Perpendicularity of the stem hole to the anvil is better than 0.4 mm/100 mm.
Note 2: Take note that when mounting high-accuracy Linear Gages (with resolution of 0.1 µm or better) to these stands, accuracy may be affected depending on the perpendicularity of the mounting hole to the top surface of the anvil (cosine effect).
Note 3: Compact dial indicators (bezel ø31, ø36) are not suitable for use with these stands.

DIMENSIONS

Unit: mm

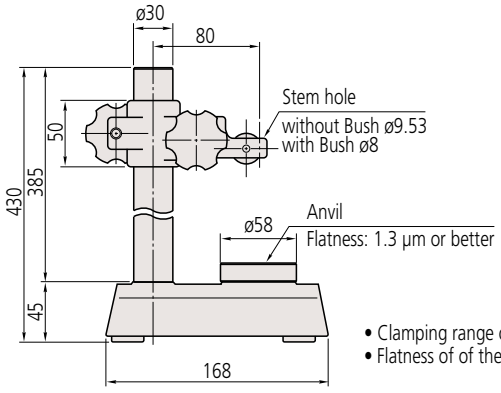

- Clamping range on column: 0 to 320 mm
- Flatness of of the bottom surface: 0.003 mm

Accessories

101462: Hardened steel serrated anvil (standard accessory)

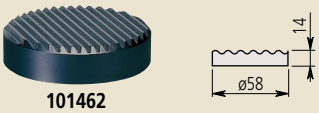

101462

101461: Hardened steel non-serrated anvil (optional)

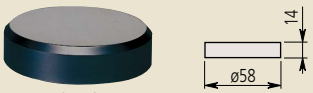

101461

101463: Hardened steel domed anvil (optional)

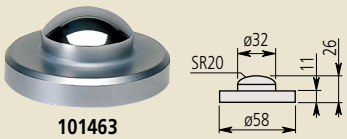

101463

Mitutoyo reserves the right to change any or all aspects of any product specification, including prices, designs and service content, without notice.

Nomenclature

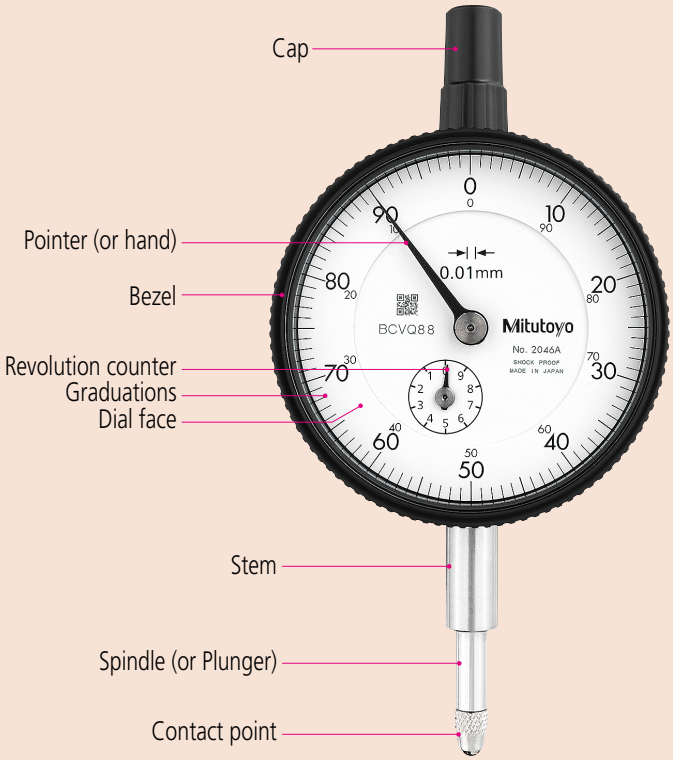

Mounting a Dial gage

Stem mounting	Method	Clamping the stem directly with a screw 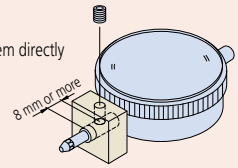	Clamping the stem by split-clamp fastening 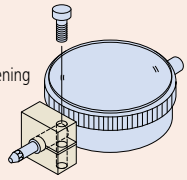
	Note	• Mounting hole tolerance: ø8 G7 (+0.005 to 0.02) • Clamping screw: M4 to M6 • Clamping position: 8 mm or more from the lower edge of the stem • Maximum clamping torque: 150 N·cm when clamping with a single M5 screw • Note that excessive clamping torque may adversely affect spindle movement.	• Mounting hole tolerance: ø8 G7 (+0.005 to 0.02)
Lug mounting	Method	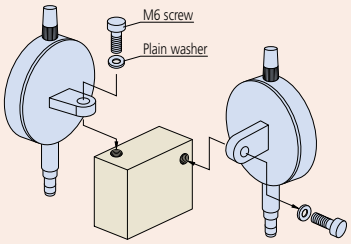	
	Note	• Lugs can be changed 90° in orientation according to the application. (The lug is set horizontally when shipped.) • Lugs of some SERIES **1** models (**1911A-10**, **1913A-10** and **1003A**), however, cannot be altered to horizontal. • To avoid cosine-effect error, ensure that any type of gage or indicator is mounted with its spindle in line with the intended measurement direction.	

Contact point

- Screw thread is standardized on M2.5×0.45 (Length: 5 mm).
- Incomplete thread section at the root of the screw shall be less than 0.7 mm when fabricating a contact point.

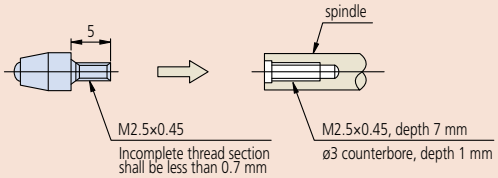

Measuring orientation

Orientation		Remarks
Vertical (contact point downward)	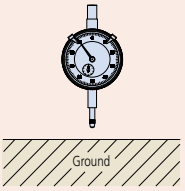	—
Lateral (spindle horizontal)	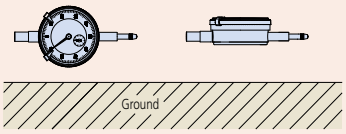	If measurement is performed in the lateral orientation, or upside-down orientation, the measuring force is less than in the vertical orientation. In this case be sure to check the operation and repeatability of the indicator. For guaranteed-operation specifications according to the operating orientation refer to the specific product descriptions in the catalog.
Upside-down (contact point upward)	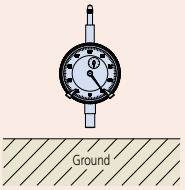	

Setting the origin of a Digimatic indicator

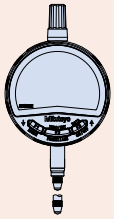

The accuracy specification in the range of 0.2 mm from the end of the stroke is not guaranteed for Digimatic indicators. When setting the zero point or presetting a specific value, be sure to lift the spindle at least 0.2 mm from the end of the stroke.

Notes on using a dial indicator or Digimatic indicator

- Do not lubricate the spindle. Doing so might cause dust to accumulate, resulting in a malfunction.
- If the spindle movement is poor, wipe the upper and lower spindle surfaces with a dry or alcohol-soaked cloth. If the movement is not improved by cleaning, contact Mitutoyo for repair.
- Before making a measurement or calibration, confirm if the spindle moves upward and downward smoothly, and stability of the zero point.

Dial Indicator Standard JIS B 7503: 2017 (Extract from JIS / Japanese Industrial Standards)

Item		Model	Measuring method (zero-point fixed)	Evaluation method (performance evaluation by moving the zero point)	Measurement examples
Indication error	Indication error over the entire measuring range	One-revolution dial indicator and multi-revolution dial indicator	Set the dial indicator on the supporting stand, and read the indication error*1 of the next point while gradually retracting the spindle. - Every 1/10 revolution for the first two revolutions*2 - Every half revolution from two to five revolutions - Every revolution from five to ten revolutions - Every five revolutions from 10 to 50 revolutions - Every ten revolutions after 50 revolutions Next, after retracting the spindle for more than three graduations of the long hand, extend the spindle gradually and read the indication error at the same measurement point in the retract direction.	Obtain the difference between the maximum and the minimum values of indication error of all measurement points in both retract and extend directions.	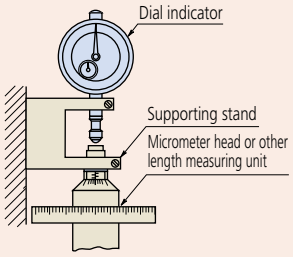
	1/10 revolution indication error			During the first two revolutions in both retract and extend directions, obtain the maximum difference of the indication error among the adjacent measurement points per 1/10 revolutions*3.	
	1/2 revolution indication error	Multi-revolution dial indicator		During the first five revolutions in both retract and extend directions, obtain the maximum difference of the maximum and the minimum indication errors over the measuring range per 1/2 revolutions.	
	1 revolution indication error			During the first ten revolutions in both retract and extend directions, obtain the maximum difference of the maximum and the minimum indication errors over the measuring range per one revolution.	
Retrace error		One-revolution dial indicator and multi-revolution dial indicator		Obtain the maximum difference of all the measuring points in reference to the indication error at the same measuring point in both forward and backward directions.	
Repeatability		One-revolution dial indicator and multi-revolution dial indicator	Set the dial indicator on the supporting stand, retract the spindle at a desired position within the measuring range. Then, extend the spindle quickly and slowly five times and read each value.	Obtain the maximum difference among five indication values.	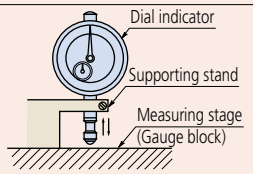
Measuring force			Set the dial indicator on the supporting stand, retract and extend the spindle continuously and gradually, and read the measuring force at the zero and end points.	Obtain the maximum measuring force, the minimum measuring force, and the difference of the measuring force in both retract and extend directions at the same measurement point.	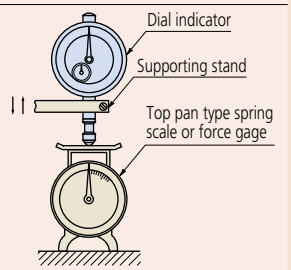

*1 For how to read the indication error, either read the input quantity of the measuring instrument aligning the long hand to the graduation, or read the indication value of the dial indicator according to the moving amount of the measuring instrument.
*2 With the one-revolution dial indicator, read the indication error per 10 graduations.
*3 With the one-revolution dial indicator, obtain the maximum difference of the indication error in the interval of adjacent 10 graduations.

Maximum permissible error

(unit: µm)

		Maximum permissible error (MPE) by measurement characteristics - dial indicators with bezel dia. 50 mm or larger												Maximum permissible error (MPE) by measurement characteristics - dial indicators with bezel dia. 50 mm or smaller and Back Plunger type dial indicators						
Graduation (mm)		0.01								0.005	0.001			0.01				0.005	0.002	0.001
Measuring range (mm)		1 or less	Over 1 and up to 3	Over 3 and up to 5	Over 5 and up to 10	Over 10 and up to 20	Over 20 and up to 30	Over 30 and up to 50	Over 50 and up to 100	5 or less	1 or less	Over 1 and up to 2	Over 2 and up to 5	1 or less	Over 1 and up to 3	Over 3 and up to 5	Over 5 and up to 10	5 or less	1 or less	1 or less
Retrace error		3	3	3	3	5	7	8	9	3	2	2	3	4	4	4	5	3.5	2.5	2
Repeatability		3	3	3	3	4	5	5	5	3	0.5	0.5	1	3	3	3	3	3	1	1
Indication error	Arbitrary 1/10 revolution	5	5	5	5	8	10	10	12	5	2	2	3.5	8	8	8	9	6	2.5	2.5
	Arbitrary 1/2 revolution	8	8	9	9	10	12	12	17	9	3.5	4	5	11	11	12	12	9	4.5	4
	Arbitrary One revolution	8	9	10	10	15	15	15	20	10	4	5	6	12	12	14	14	10	5	4.5
	Entire measuring range	8	10	12	15	25	30	40	50	12	5	7	10	15	16	18	20	12	6	5

Note 1: The maximum permissible error (MPE) for one-revolution dial indicators does not specify the indication error of an arbitrary 1/2 and 1 revolution.
Note 2: The MPE represents the value at 20 °C, which JIS B 0680 defines as the standard temperature.
Note 3: The measurement characteristics of a dial indicator have to meet both maximum permissible error (MPE) and measurement force permissible limits (MPL) at any position within the measuring range in any posture when the measurement characteristics are not specified by the manufacturer.

Mitutoyo's Response to Dial Indicator Standard JIS B 7503: 2017

- We guarantee the accuracy of completed products by inspecting them in the vertical posture. Standard-attached inspection certificate includes inspection data.
- We issue paid-for calibration results for horizontal or opposite posture if required.
- It is said that, for evaluation of the compatibility to the specifications, JIS B 0641-1 or the criteria where the internationally-recognized specification range and the OK range are equal shall be applied. Also, it is said that the uncertainty is preferred to be evaluated based on ISO 14253-2 and ISO/IEC Guide 98-3. Therefore, we perform shipping inspection of dial indicators inclusive of the uncertainty of calibration as in the past.

Dial Test Indicator (Lever Type) Standard JIS B 7533: 2015 (Extract from JIS / Japanese Industrial Standards)

No.	Item.	Measuring method	Measuring point	Evaluation method	Diagram
1	Error of indication over a range of Measuring range	Holding the dial test indicator (lever type), define the reference point at near the contact point resting point where the indication and error of indication is set zero. Then, move the contact point in the forward direction and read the error of indication at each measuring point. Next, after moving the contact point for more than three graduations from the end of the measuring range, move the contact point in the backward direction and read the error of indication at the same measurement point in the forward direction. (The forward direction is the direction against the measuring force to the contact point of the lever-operated dial indicator; the backward direction is the measuring force applied direction.)	Per 10 graduations in the forward and backward direction from the reference point to the end point.	Obtain the difference between the maximum and the minimum values of indication error of all measurement points in the forward direction.	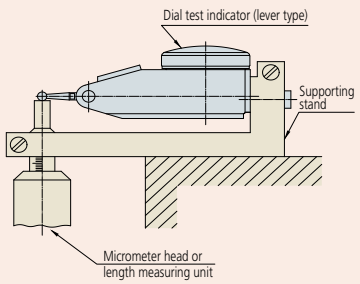
2	Error of indication over a range of 10 scale divisions			In the forward direction from the reference point to the end point, obtain the maximum difference of the indication error among the adjacent measurement points per 10 graduations.	
3	Error of indication over a range of One revolution			In the forward direction from the reference point to the end point, obtain the maximum difference of the maximum and the minimum indication errors to be read by the zero-point fixed method over the measuring range per 1 revolution.	
4	Hysteresis			Obtain the maximum difference in reference to the indication error at the same measuring point in both forward and backward directions among all the measurement points.	
5	Repeatability	Holding the dial test indicator (lever type) with its contact point parallel with the top face of the measuring stage, move the contact point quickly and slowly five times at a desired position within the measuring range and read the indication at each point.	At arbitrary points within the measuring range	Obtain the maximum difference of the five measured values.	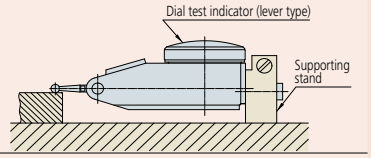
6	Measuring force	Holding the dial test indicator (lever type), move the contact point in the forward and backward directions continuously and gradually, and read the measuring force in the measuring range.	Reference point and end point within the measuring range	Obtain the maximum and the minimum values in reference to the measuring force.	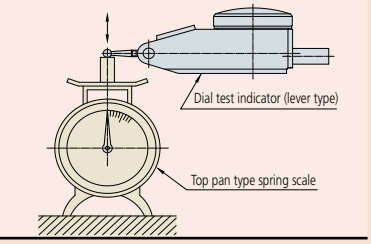

F

• Maximum permissible error and permissible limits

Graduation (mm)		0.001/0.002			0.01			
Revolution		1 revolution	Multi-revolution		1 revolution			Multi-revolution
Measuring range (mm)		0.3 or less	Over 0.3, up to 0.5	Over 0.5, up to 0.6	0.5 or less	Over 0.5, up to 1.0		Over 1.0, up to 1.6
						L1 ≤ 35	35 < L1	
Error of indication over a range of	Measuring range (μm)	4	6	7	6	9	10	16
	One revolution (μm)	—	5	5	—	—	—	10
	10 scale divisions (μm)	2	2	2	5	5	5	5
Hysteresis (μm)		3	4	4	4	4	5	5
Repeatability (μm)		1	1	1	3	3	3	3
Measuring force (N)	Max.	0.5	0.5	0.5	0.5	0.5	0.5	0.5
	Min.	0.01	0.01	0.01	0.01	0.01	0.01	0.01

Dial Test Indicators and the Cosine Effect

Always minimize the angle between movement directions during use.

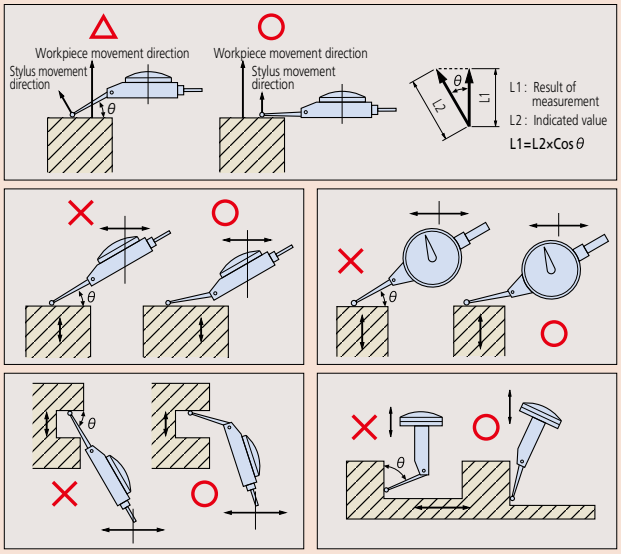

The reading of any indicator will not represent an accurate measurement if its measuring direction is misaligned with the intended direction of measurement (cosine effect). Because the measuring direction of a dial test indicator is at right angles to a line drawn through the contact point and the stylus pivot, this effect can be minimized by setting the stylus to minimize angle θ (as shown in the figures). If necessary, the dial reading can be compensated for the actual θ value by using the table below to give the result of measurement.
Result of measurement = indicated value × compensation value

Compensating for a non-zero angle

Angle	Compensation value
10°	0.98
20°	0.94
30°	0.87
40°	0.77
50°	0.64
60°	0.50

Examples

If a 0.002 mm measurement is indicated on the dial at various values of θ, the result of measurements are:
For θ=10°, 0.002 mm×0.98=0.00196 mm
For θ=20°, 0.002 mm×0.94=0.00188 mm
For θ=30°, 0.002 mm×0.87=0.00174 mm

Mitutoyo's Response to Dial Test Indicator (Lever Type) Standard JIS B 7533: 2015

- In the finished product inspection, the accuracy is guaranteed using the horizontal, tilted, vertical type dial indicator with its dial face facing upward; the parallel type with its dial face set in the vertical orientation.
  Standard-attached inspection certificate includes inspection data.
- The calibration result for other than the above postures is available for a fee.
- It is said that, for evaluation of the compatibility to the specifications, the criteria based on JIS B 0641-1 or ISO/TR14253-6 shall be applied.
  Also, it is said that the uncertainty is preferred to be evaluated based on ISO 14253-2 and ISO/IEC Guide 98-3. Therefore, we perform shipping inspection of dial indicators inclusive of the uncertainty of calibration as in the past.



Linear Gages (Environment-Resistant)
LG100 Series

Refer to pages G-5 to G-6 for details.



Linear Gages (Environment-Resistant and Slim Type)
LG200 Series

Refer to page G-7 for details.



Industrial Interface-mounted Compact Counter
EJ-102N/NE Counter, Interface Unit

Refer to page G-13 for details.



Laser Scan Micrometers
LSM-6902H

Refer to pages G-30 for details.

G

Sensor Systems

MeasurLink® ENABLED
Data Management Software by Mitutoyo

Measurement Data Network System

MeasurLink® is a measurement data management system based on databases (SQL Server). You can build a network to manage the measurement results and measuring machines by simply combining the functions necessary for your purpose.

MeasurLink® is a registered trademark of Mitutoyo Corporation in Japan and Mitutoyo America Corporation in the United States.

IP67 G IP66

IP Codes

These are codes that indicate the degree of protection provided (by an enclosure) for the electrical function of a product against the ingress of foreign bodies, dust and water as defined in IEC standards (IEC 60529: 2001) and JIS C 0920: 2003.
(Refer to page IX)

PROPRIETARY INSPECTION CERTIFICATE

Measuring Instruments Shipped with Inspection Certificate

Mitutoyo guarantees product quality as a leading precision measuring instrument manufacturer and ships measuring instruments with an inspection certificate that includes inspection data so that customers can use them with confidence.

ABSOLUTE™

ABSOLUTE Linear Encoder

Mitutoyo developed the unique absolute method to retain position information after the power is turned off.
The origin is set once - thereafter the live position is displayed when the power is turned on.

MiCAT
Mitutoyo Intelligent Computer Aided Technology
the standard in world metrology software
SENSOR

Measurement Program

"MiCAT Planner" automatic measurement program generation software is supported.

INDEX

Linear Gages

Gage Heads/Display Units

LG100 G-5
LG200 G-7

Low-cost Linear Gage

LGS-1012P G-8

High-accuracy/resolution Type

LGH G-9

Linear Gage Counter

EC G-11
EH G-12
EJ-102N/NE G-13
LG QuickSetupTool G-15
SENSORPAK G-16
Quick Guide to Precision Measuring Instruments G-17

Litematic

VL-50-B/50S-B G-20

Mu-Checker (Electronic micrometer)

Lever/Cartridge Probe Heads G-21
Analog or digital amplifier/display G-23
EV-16A G-24
D-EV G-25
Quick Guide to Precision Measuring Instruments G-26

Laser Scan Micrometers

LSM-500S G-27
LSM-501S G-27
LSM-503S G-28
LSM-506S G-28
LSM-512S G-29
LSM-516S G-29
LSM-6902H/6900 G-30
LSM-9506 G-30
LSM-5200 G-31
LSM-6200 G-31
Optional Accessories G-32
Quick Guide to Precision Measuring Instruments G-35

Gage Heads/Display Units

[Gage Heads]

[Conversion plug]

Environment-Resistant

LG100

IP67 G



Measuring range: 10 mm/25 mm/50 mm
Resolution: 1 µm/0.5 µm/0.1 µm

Refer to page G-5

Environment-Resistant and Slim Type

LG200*

Phase-A/B

IP67 G



Measuring range: 10 mm
Resolution: 1 µm/0.5 µm/0.1 µm

Refer to page G-7

* Function of reference point detection on counter is disabled.

Conversion plug **21HZA196**

Conversion plug **21HZA195**

Digimatic output Type

LGS

Digimatic

IP66



Measuring range: 12.7 mm
Resolution: 10 µm

Refer to page G-8

High-accuracy Type

LGH



Measuring range: 10 mm
Resolution: 0.01 µm/0.005 µm

Refer to page G-9

Mitutoyo reserves the right to change any or all aspects of any product specification, including prices, designs and service content, without notice.

[Display Units]

DIN rail-mounted Type

EJ-102N / NE



2-axis input, subtraction calculations
8 units can be connected

Refer to page G-13

Panel mount

EH-102Z



2-axis input, subtraction calculations
Multi-function

Refer to page G-12

EH-101P (1 axis)
EH-102P (2 axes)



Multi-function

Refer to page G-12

EH-102D



2-axis input, subtraction calculations
Multi-function

Refer to page G-12

Compact display Unit

EC-101D



1-axis input

Refer to page G-11

[Interface Unit / Software]

Interface Unit

CC-Link
21HZA186



Refer to page G-13

PROFINET
21HZA187



Refer to page G-13

EtherNet/IP
21HZA188



Refer to page G-13

EtherCAT
21HZA264



Refer to page G-13

USB
21HZA149



Refer to page G-13

Setup tool for EJ counters

LG QuickSetupTool
(can be downloaded for free from the Mitutoyo website)

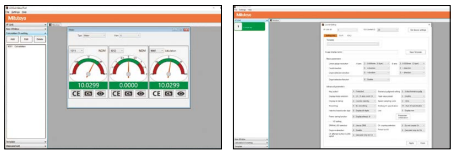

Refer to page G-15

Measurement data acquisition software

SENSORPAK



Refer to page G-16

Mitutoyo reserves the right to change any or all aspects of any product specification, including prices, designs and service content, without notice.

LG100
SERIES 542 — Environment-Resistant type

- High-accuracy gage head suitable for in-line and in-laboratory use.
- Assures the expected repeatability (2 σ) in the full measurement range and the narrow-range precision.
- Protection grade IP67G with sliding durability of 50 million times and more*1 and adoption of highly oil-resistant materials.

*1 10 mm range models (Actual value from in-house tests)

- All models have the origin point signal output function to restore the origin point position after recovery from problems such as overspeed.
- It can be connected to a compact counter (**EJ** counter) suitable for in-line use or building into a device or a multifunctional counter (**EH** counter)*2 suitable for use in measurement rooms.

*2 A conversion plug is required.

542-190 / 542-191 / 542-192



542-193 / 542-194 / 542-195



542-196 / 542-197



Enables real-time measurement and data management

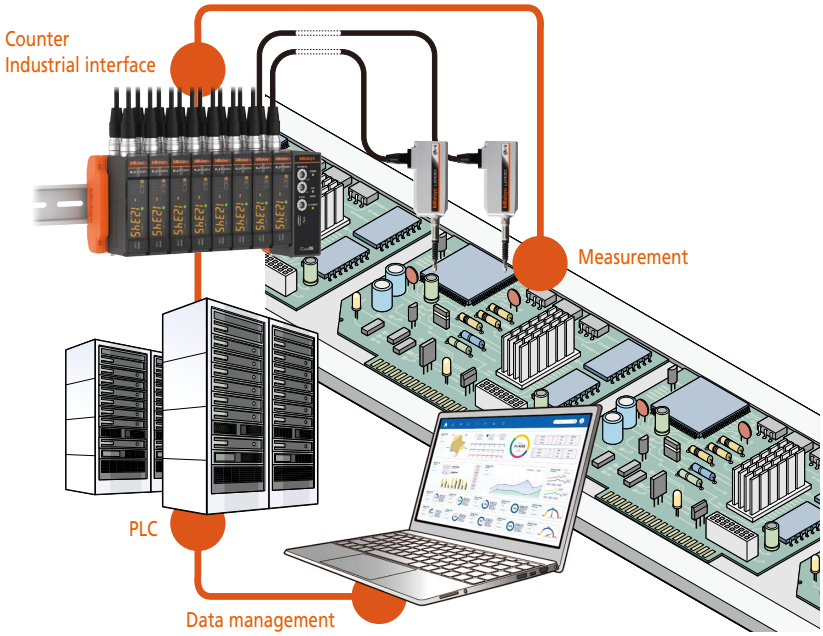

System Configuration

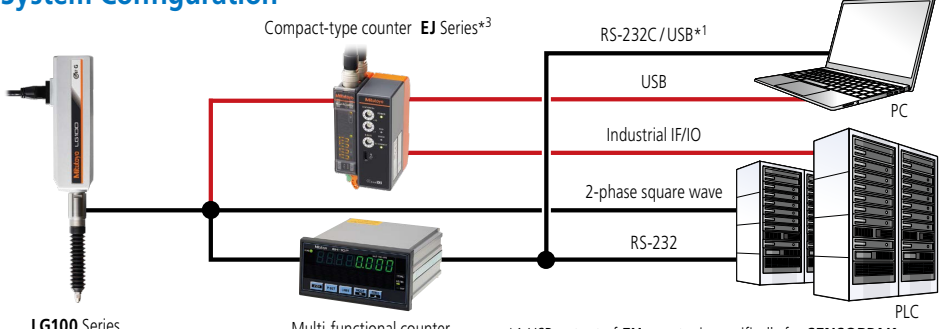

*1 USB output of **EH** counter is specifically for **SENSORPAK**.
*2 A conversion plug is required for connecting to **EH** counter.
*3 Conventional gages can be connected using conversion connectors. (Please contact us for details of connectable gages.)

IP67 G

Connector

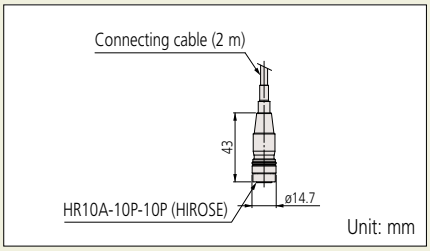

Optional Accessories

- Air lifter
  For 10 mm range models: **02ADE230**
  For 25 mm range models: **02ADE250**
  For 50 mm range models: **02ADE270**

Note 1: Required air pressure: 0.2 to 0.4 MPa
(With a 0.1 µm resolution type: 0.2 MPa)
Note 2: Spindle extends when air is supplied.



- Rubber boot (spare)
  For 10 mm range models: **21HAA331**
  For 25 mm range models: **21HZA176**
  For 50 mm range models: **21HZA184**

Note 3: Dimensions are shown in the external dimensions drawing of the product.

- Thrust stem set:
  For 10 mm range models: **02ADB680**
  (Thrust stem: **02ADB681**, Clamp nut: **02ADB682**)
  For 25/50 mm range models: **02ADN370**
  (Thrust stem: **02ADN371**, Clamp nut: **02ADB692**)
  This is a combination of thrust stem and a clamp nut.
- Spanner wrench:
  For 10 mm range models : **02ADB683**
  For 25/50 mm range models: **02ADB693**
  If required spanner wrench is required for tightening.
  If using multiple gages, a thrust stem set is required for each gage and one spanner wrench.
- Extension cable
  5 m: **21HZA197**
  10 m: **21HZA198**
  20 m: **21HZA199**

Note 4: Connectable up to 3 pieces, 20 m at maximum.

- Conversion plug
  Connection to EH-101P/102P: **21HZA195**
  Connection to EH-102Z : **21HZA196**

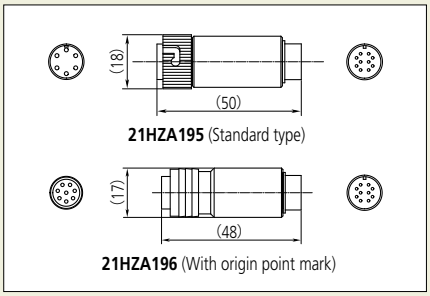

Mitutoyo reserves the right to change any or all aspects of any product specification, including prices, designs and service content, without notice.

SPECIFICATIONS

Order No.		542-190	542-191	542-192	542-193	542-194	542-195	542-196	542-197
Measuring range		10 mm			25 mm			50 mm	
Resolution		1 µm	0.5 µm	0.1 µm	1 µm	0.5 µm	0.1 µm	1 µm	0.5 µm
Measuring accuracy (20 °C) L=arbitrary measuring length (mm)		1.5 + L/50 µm		0.8 + L/50 µm	1.5 + L/50 µm		0.8 + L/50 µm	1.5 + L/50 µm	
Small range accuracy (20 °C)		0.5 µm (Arbitrary 20 µm range)							
Repeatability: 2σ (20 °C)		0.3 µm							
Reference mark repeatability: σ (20 °C)		σ≤0.5 µm (at a constant reference point passing speed less than 300 mm/s in the same direction)							
Measuring force	Contact point downwards	1.4 N or less			4.6 N or less			5.7 N or less	
	Contact point horizontal	1.3 N or less			4.3 N or less			5.3 N or less	
	Contact point upwards	1.2 N or less			4.0 N or less			4.9 N or less	
Position detection method		Optical transmission-type Linear encoder							
Maximum response speed		1,500 mm/s		400 mm/s	1,500 mm/s		400 mm/s	1,500 mm/s	
Output signal		90° phase difference, differential square wave (RS-422A equivalent)							
Minimum edge intervals		500 ns (2 MHz)	250 ns (4 MHz)		500 ns (2 MHz)	250 ns (4 MHz)		500 ns (2 MHz)	250 ns (4 MHz)
Output signal pitch		4 µm	2 µm	0.4 µm	4 µm	2 µm	0.4 µm	4 µm	2 µm
Reference mark position (Phase-Z)		Approx. 3 mm from contact point tip (lowest rest point)			Approx. 5 mm from contact point tip (lowest rest point)				
Mass		Approx. 260 g			Approx. 300 g			Approx. 400 g	
Contact point		ø3 mm carbide tipped (fixing screw: M2.5 (P=0.45) ×5), standard contact point: **901312**							
Stem		ø8 mm			ø15 mm				
Bearing		Linear ball type							
Output cable length		2 m (directly from casing)							
Connector		Plug: HR10A-10P-10P (HIROSE), Compatible receptacle: HR10A-10R-10S (HIROSE), Compatible connector: HR10A-10J-10S (HIROSE)							
Operating temperature (humidity) ranges		0 to 50 °C (RH 20 to 80%, non-condensing)							
Storage temperature (humidity) ranges		-10 to 60 °C (RH 20 to 80%, non-condensing)							
Standard accessories		Wrench for contact point: **538610**			Wrench for contact point: **210187**				

DIMENSIONS

Unit: mm

542-190 / 542-191 / 542-192

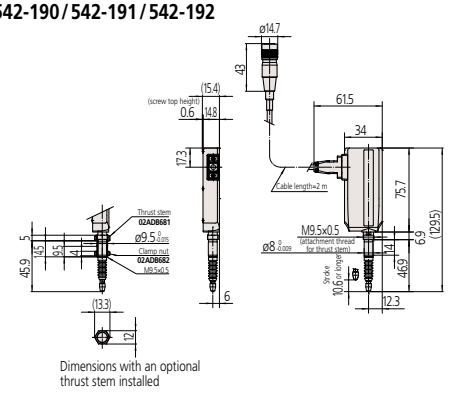

Dimensions with an optional thrust stem installed

542-193 / 542-194 / 542-195

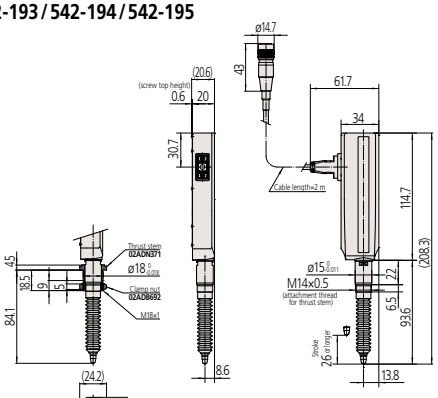

Dimensions with an optional thrust stem installed

542-196 / 542-197

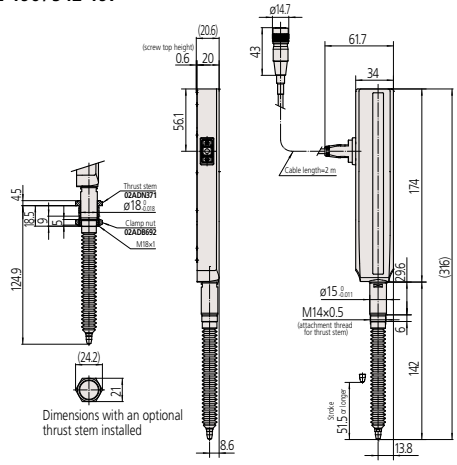

Dimensions with an optional thrust stem installed



Refer to the Linear Gage Brochure (**E13007**) for more details.

IP67 G

LG200
SERIES 542 — Environment-Resistant and Slim Type

- Slimmer body with approx. 1/5 cross section compared with **542-190** (**LG100**).
- High-accuracy gage head suitable for in-line and in-laboratory use.
- Assures the expected repeatability (2 σ) in the full measurement range and the narrow-range precision.
- Protection grade IP67G with sliding durability of 100 million times and more*1 and adoption of highly oil-resistant materials.

*1 Actual value from in-house tests.

- It can be connected to a compact counter (**EJ** counter) suitable for in-line use or building into a device or a multifunctional counter (**EH** counter)*2 suitable for use in measurement rooms.

*2 A conversion plug is required.



542-186/542-187/542-188

SPECIFICATIONS

Order No.		542-186	542-187	542-188
Measuring range		10 mm		
Resolution		1 µm	0.5 µm	0.1 µm
Measuring accuracy (20 °C)		(1.5 + L/50) µm L=arbitrary measuring length (mm)		(0.8 + L/50) µm L=arbitrary measuring length (mm)
Small range accuracy		0.5 µm (Arbitrary 20 µm range)		
Repeatability: 2 σ (20 °C)		0.3 µm		
Measuring force	Contact point downwards	0.8 N or less		
	Contact point horizontal	0.75 N or less		
	Contact point upwards	0.7 N or less		
Position detection method		Optical transmission-type Linear encoder		
Maximum response speed		1500 mm/s		400 mm/s
Output signal		90° phase difference, differential square wave (RS-422A equivalent)		
Minimum edge intervals		500 ns (2 MHz)	250 ns (4 MHz)	
Output signal pitch		4 µm	2 µm	0.4 µm
Mass		Approx. 210 g		
Contact point		ø3 mm carbide tipped (fixing screw: M2.5 (P=0.45) ×5), standard contact point: **901312**		
Stem		ø8 mm		
Bearing		Linear ball type		
Output cable length		Approx. 2.5 m (directly from casing)		
Connector		Plug: HR10A-10P-10P (HIROSE), Compatible receptacle: HR10A-10R-10S (HIROSE), Compatible connector: HR10A-10J-10S (HIROSE)		
Operating temperature (humidity) ranges		0 to 50 °C (RH 20 to 80%, non-condensing)		
Storage temperature (humidity) ranges		–10 to 60 °C (RH 20 to 80%, non-condensing)		
Standard Accessories		Wrench for contact point: **538610**		

DIMENSIONS

Unit: mm

542-186 / 542-187 / 542-188

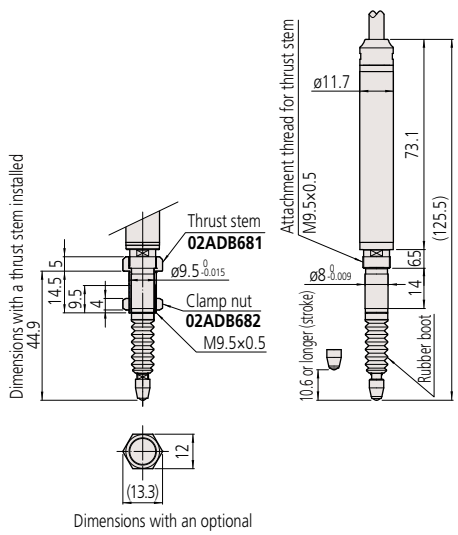

Dimensions with an optional thrust stem installed

Connector

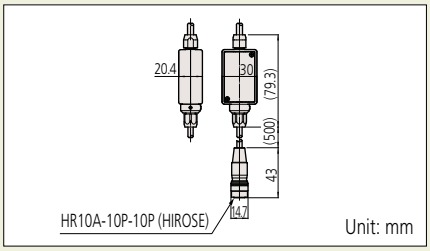

Optional Accessories

- Air lifter: **02ADE230**

Note 1: Required air pressure: 0.2 to 0.4 MPa
(With a 0.1 µm resolution type: 0.2 MPa)
Note 2: Spindle extends when air is supplied.



- Rubber boot: **21HAA331** (spare)
- Thrust stem set: **02ADB680**
  (Thrust stem: **02ADB681**, Clamp nut: **02ADB682**)
  This is a combination of thrust stem and a clamp nut.
- Spanner wrench: **02ADB683**
  If required spanner wrench is required for tightening.
  If using multiple gages, a thrust stem set is required for each gage and one spanner wrench.

Thrust stem set / Spanner Wrench



- Extension cable
  5 m: **21HZA197**
  10 m: **21HZA198**
  20 m: **21HZA199**

Note 1: Connectable up to 3 pieces, 20 m at maximum.

- Conversion plug
  Connection to EH-101P/102P: **21HZA195**
  Connection to EH-102Z: **21HZA196**

Note 2: Connectable to EH-102Z but the function of reference point detection is disabled.

Custom order example

- Measuring force change
- Cable length change (less than 2 m)
- Connector change

Mitutoyo reserves the right to change any or all aspects of any product specification, including prices, designs and service content, without notice.

ABSOLUTE™ IP66

Connector

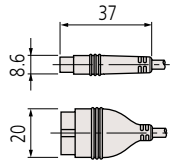

Unit: mm

Optional Accessories

- Rubber boot: **238774** (spare)
- Air lifter (metric): **903594**
- Air lifter (inch): **903598**
- SPC cable extension adapter: **02ADF640**
- Extension cable for Digimatic gages (0.5 m): **02ADD950**
- Extension cable for Digimatic gages (1 m): **936937**
- Extension cable for Digimatic gages (2 m): **965014**

Note: When connecting an extension cable, an SPC cable extension adapter is required.



Refer to the Linear Gage Brochure (**E13007**) for more details.

LGS-1012P
SERIES 575 — Digimatic output Type

- ABSOLUTE electrostatic capacitance type encoder makes it possible to maintain the reference point even when the power is switched off.
- Excellent protection against dust and splashing water (IP66) on the factory floor.

575-303



SPECIFICATIONS

Metric

Order No.		**575-303**
Measuring range		12.7 mm
Resolution		10 µm
Measuring accuracy (20 °C)		15 µm
Measuring force	Contact point downwards	2 N or less
	Contact point horizontal	1.8 N or less
	Contact point upwards	1.6 N or less
Position detection method		ABSOLUTE electrostatic capacitance type linear encoder
Response speed		Unlimited (not applicable to scanning measurement)
Output		Digimatic code
Mass		Approx. 190 g
Contact point		ø3 mm carbide tipped (fixing screw: M2.5 (P=0.45) ×5), standard contact point: **901312**
Stem		ø8 mm
Bearing		Plain type
Output cable length		2 m (directly extended from the main unit)
Operating temperature (humidity) ranges		0 to 40 °C (RH 20 to 80%, non-condensing)
Storage temperature (humidity) ranges		–10 to 60 °C (RH 20 to 80%, non-condensing)

Inch

Order No.		**575-313**
Measuring range		0.5 in
Resolution		0.0005 in
Measuring accuracy (20 °C)		0.0008 in
Measuring force	Contact point downwards	2 N or less
	Contact point horizontal	1.8 N or less
	Contact point upwards	1.6 N or less
Position detection method		ABSOLUTE electrostatic capacitance type linear encoder
Response speed		Unlimited (not applicable to scanning measurement)
Output		Digimatic code
Mass		Approx. 190 g
Contact point		ø3 mm carbide tipped (fixing screw: 4-48 UNF), standard contact point: **21BZB005**
Stem		ø9.52=3/8 in DIA
Bearing		Plain type
Output cable length		2 m (directly extended from the main unit)
Operating temperature (humidity) ranges		0 to 40 °C (RH 20 to 80%, non-condensing)
Storage temperature (humidity) ranges		–10 to 60 °C (RH 20 to 80%, non-condensing)

DIMENSIONS

Unit: mm

575-303

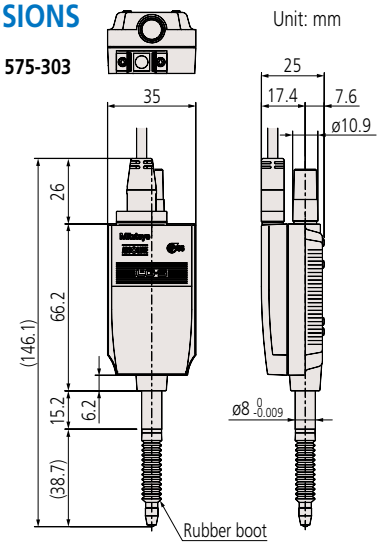

Unit: in

575-313

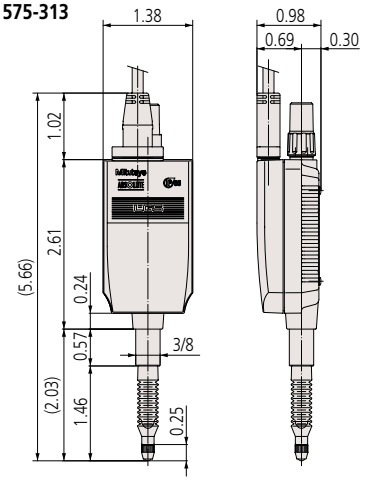

Mitutoyo reserves the right to change any or all aspects of any product specification, including prices, designs and service content, without notice.

Mitutoyo

LGH (0.01/0.005 µm resolution)
SERIES 542 — High-accuracy/resolution Type

- This series has achieved very high accuracy combined with a resolution of 0.01/0.005 µm (according to model), practically equivalent to that of a laser interferometer, and a wide measuring range of 10 mm.
- A compact body design makes a significant contribution to a downsizing of this gage itself, which is best suited for calibration/evaluation of master gages as well as measurement of high-precision parts and as a length measuring sensor incorporated into high-precision positioning/control units.
- A low measuring force model is available for those applications where measurement of easily deformed or damaged workpieces is required.
- Every **LGH** Series gage is bundled with a dedicated counter.

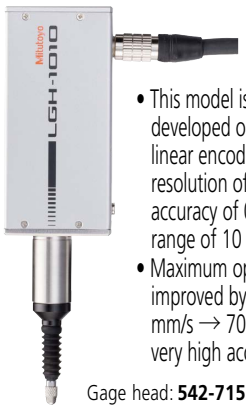

- This model is equipped with a newly developed optical reflection-type linear encoder, achieving an excellent resolution of 0.01 µm, a measuring accuracy of 0.2 µm and a measuring range of 10 mm at a low price.
- Maximum operating speed has been improved by a factor of 2.8 times (250 mm/s → 700 mm/s) while maintaining very high accuracy.

Gage head: **542-715**



- This model is equipped with a newly developed ultra-high precision transmission type linear encoder, achieving the outstanding resolution of 0.005 µm (5 nm).
- Exceptional measuring accuracy of 0.1 µm has been attained over the wide measuring range of 10 mm. This series is most suited for calibration/evaluation of master gages where its wide measuring range is a great advantage.

Gage head: **542-720**



Dedicated counter

TYPICAL APPLICATIONS

Master gage calibration/evaluation



Inspection of high-precision parts



Needle contact-point mounting example

DIMENSIONS

Unit: mm

542-716

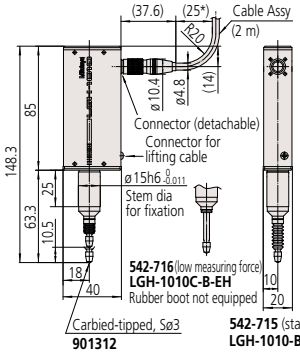

542-721

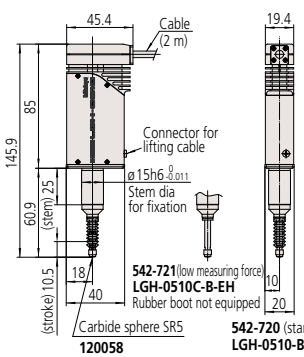

Dedicated counter (set)

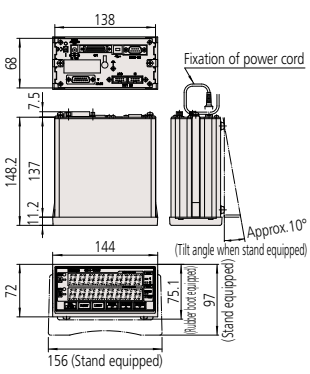

* Minimum bending radius or minimum dressed dimension

Optional Accessories

- Measuring stand: **971750**

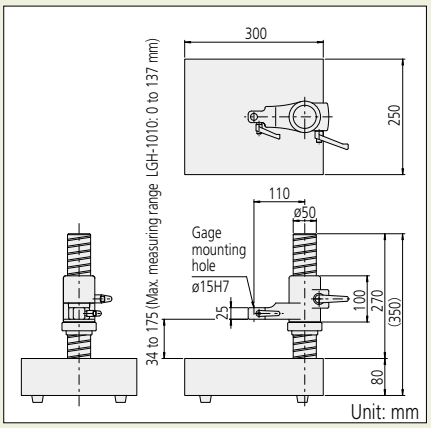

- Spindle lifting cable: **971753**

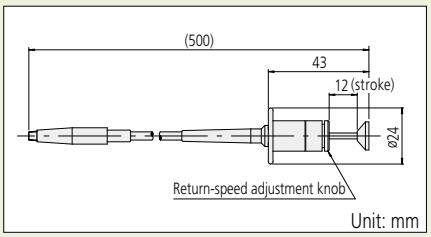

- I/O connector: **02ADB440**



- **SENSORPAK**

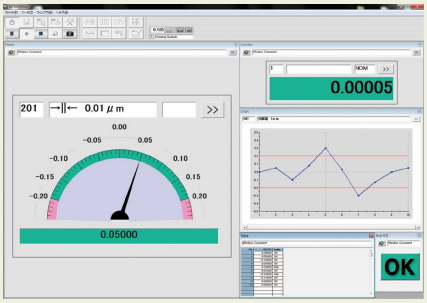

Note: Refer to page G-16 for more details.

- Rubber boot: **238772**
  (Spare for **542-715** and **542-720**)



Refer to the Linear Gage Brochure (**E13007**) for more details.

Mitutoyo reserves the right to change any or all aspects of any product specification, including prices, designs and service content, without notice.

SPECIFICATIONS

		Resolution 0.01 µm / Accuracy 0.2 µm model	
Order No.		**542-715** (Standard)	**542-716** (Low measuring force)
Measuring range		10 mm	
Resolution		0.01 µm (0.05 µm, 0.1 µm, 0.5 µm, 1 µm can be selected from the counter)	
Measuring accuracy (20 °C)*1		0.2 µm	
Repeatability (20 °C)*1		0.1 µm (2σ)	
Retrace error (20 °C)*1		0.1 µm	
Measuring force	Contact point downwards	0.65 N or less	Approx. 0.12 N
	Contact point horizontal	0.55 N or less	Not applicable
	Contact point upwards	0.45 N or less	Not applicable
Position detection method		Optical reflection type linear encoder	
Detectable operation speed		In normal measurement: 700 mm/sec; for peak detection: 120 mm/sec	
Mass of gage head		Approx. 370 g	
Contact point		Carbide tipped, Sø3 mm (M2.5 (P=0.45) ×5 mm), standard contact point: **901312**	
Stem		ø15 mm	
Bearing		Linear ball type	
Output cable length		Approx. 2 m	
Operating temperature (humidity) ranges		0 to 40 °C (Reference temperature 20 °C)/20 to 80% RH (non-condensing)	
Storage temperature (humidity) ranges		–10 to 60 °C/20 to 80% RH (non-condensing)	
Counter Specifications			
Display range		±999.99999 mm	
Functions		Zero-setting, presetting, direction changeover, tolerance judgment (3 steps/5 steps), RS-LINK	
Peak hold function		Yes	
Interface		RS-232C, USB (only for **SENSORPAK**), Digimatic (Printer: **DP-1VA LOGGER**)*3, I/O Connector	
External output		• RS-232C: counting data • Digimatic output: counting data*3 • I/O connector: counting data (simplified BCD), tolerance judgment result, simplified analog output	
External control		Zero-setting, presetting, data hold, peak measurement mode selection, peak clear	
Power supply		Suppplied AC Adapter, or 12 to 24 V DC, max. 700 mA	
Power consumption		8.4 W (max. 700 mA), ensure at least 1 A power supply per unit.	
Mass of counter		Approx. 900 g (AC Adapter excluded)	
Standard accessories		Wrench for contact point, rubber boot, stand, washer (for counter), AC Adapter, AC cord, DC plug, user's manual, inspection certificate	

		Resolution 0.005 µm / Accuracy 0.1 µm model	
Order No.		**542-720** (Standard)	**542-721** (Low measuring force)
Measuring range		10 mm	
Resolution		0.005 µm (0.01 µm, 0.05 µm, 0.1 µm can be selected from the counter)	
Measuring accuracy (20 °C)*1		0.1 µm	
Repeatability (20 °C)*1		0.02 µm (2σ)	
Retrace error (20 °C)*1		0.05 µm	
Measuring force	Contact point downwards	0.65 N or less	Approx. 0.1 N
	Contact point horizontal	0.55 N or less	Not applicable
	Contact point upwards	0.45 N or less	Not applicable
Position detection method		Ultra-high accuracy transmission type linear encoder	
Detectable operation speed		In normal measurement: 250 mm/sec	
Mass of gage head		Approx. 370 g	
Contact point		Carbide sphere SR5 (M2.5 (P=0.45) ×5 mm), standard contact point: **120058**	
Stem		ø15 mm	
Bearing		Linear ball type	
Output cable length		Approx. 2 m	
Operating temperature (humidity) ranges		15 to 25 °C (Reference temperature 20 °C)/30 to 60% RH (non-condensing)	
Storage temperature (humidity) ranges		–10 to 60 °C/20 to 80% (non-condensing)*2	
Counter Specifications			
Display range		±99.999995 mm	
Functions		Zero-setting, presetting, direction changeover, tolerance judgment (3 steps/5 steps), RS-LINK	
Peak hold function		No	
Interface		RS-232C, USB (only for **SENSORPAK**), Digimatic (Printer: **DP-1VA LOGGER**)*3, I/O Connector	
External output		• RS-232C: counting data • Digimatic output: counting data*3 • I/O connector: counting data (simplified BCD), tolerance judgment result, simplified analog output	
External control		Zero-setting, presetting, data hold	
Power supply		Suppplied AC Adapter, or +12 to 24 V DC, max. 700 mA	
Power consumption		8.4 W (max. 700 mA), ensure at least 1 A power supply per unit.	
Mass of counter		Approx. 900 g (AC Adapter excluded)	
Standard accessories		Wrench for contact point, rubber boot, stand, washer (for counter), AC Adapter, AC cord, DC plug, user's manual, inspection certificate	

*1 Applies when used with counter.
*2 The storage temperature/humidity ranges after unpacking are the same as the operating temperature/humidity ranges.
*3 Digimatic output shall be up to 6 digits of data. For data of 7 digits or more, all digits will not be output to the display.



Refer to the Linear Gage Brochure (**E13007**) for more details.

EC Counter
SERIES 542 — Only for Digimatic output

- This Digimatic display can be connected to Linear gages with Digimatic output (**LGS**).
- Employs DIN size (96×48 mm) and mount-on-panel configuration to facilitate system integration.
- It has a data output and tolerance evaluation function.



542-007

Function
- Preset
- Tolerance judgment (3 steps)
- Digimatic output

Optional Accessories
- Connecting cable for digimatic mini-processor: **936937** (1 m), **965014** (2 m)
- DC plug: **214938**
- I/O cable (2 m): **21HZA222**

SPECIFICATIONS

Order No.		**542-007***
Model		**EC-101D**
Resolution ( ) indicates maximum display range		0.01 mm (±9999.99)/0.0005 in (±99.9995 in)/0.001 in (±999.999 in) 0.001 mm (±999.999)/0.00005 in (±9.99995 in)/0.0001 in (±99.999 in) [Automatic setting by gage]
Display		Sign plus 6 digits (Green LED)
Tolerance judgment display		LED display (3 steps: Amber, Green, Red)
External output (switching type)	Tolerance judgment output	–NG, OK, +NG (open-collector)
	Data output	Digimatic output
Control input		External PRESET, external HOLD
Power supply	Voltage	Supplied AC adapter, or 9 to 12 V DC
	Consumption	4.8 W (max. 400 mA) Ensure at least 1 A is available per unit.
Operating temperature (humidity) ranges		0 to 40 °C (RH 20 to 80%, non-condensing)
External dimensions		96 (W) ×48 (H) ×84.6 (D) mm
Standard Accessories		AC adapter: **12BAR954** AC cable: **12BAK729** (Japan), **12BAK730** (U.S.), **12BAK731** (EU), **12BAK734** (UK), **12BAK732** (China), **12BAK733** (Korea)
Applicable gage head		**LGS**, **ID**
Mass		500 g

* To denote your AC power cable add the following suffixes to the order No.: A for UL/CSA, D for CEE, DC for CCC, E for BS, K for KC, C and No suffix are required for PSE.

DIMENSIONS

Unit: mm

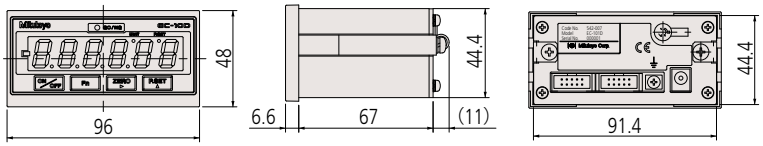



Refer to the Linear Gage Brochure (**E13007**) for more details.

Mitutoyo reserves the right to change any or all aspects of any product specification, including prices, designs and service content, without notice.

Optional Accessories

- I/O output connector (with cover): **02ADB440**
- SPC cable (0.5 m): **02ADD950**
- SPC cable (1 m): **936937**
- SPC cable (2 m): **965014**
- Measurement data loading software: **SENSORPAK**

Note: The Digimatic connecting cable doubles as a RS Link cable.

- Conversion plug for without origin point mark: **21HZA195** (For connecting **LG100**/**LG200** to **EH-101P**/**EH-102P**)
- Conversion plug for with origin point mark: **21HZA196** (For connecting **LG100**/**LG200** to **EH-102Z**. However, the origin detection function is disabled for **LG200**)



Refer to the Linear Gage Brochure (**E13007**) for more details.

EH Counter
SERIES 542 — Panel mount, Multi-function Type with RS-232C Communication Functions

- Two types are available for this model: a 1-axis display and a 2-axis display, both of which enable addition or subtraction calculations between two gages.
- Multifunctional counter equipped with zero-setting, presetting, tolerance judgment.
- RS-232C and USB are equipped as standard. Data transfer to a PC is possible. (USB is supported only by Mitutoyo **SENSORPAK**.)
- A multi-point measuring system (max. 20 points and max. 10 units) can easily be configured with the built-in RS Link networking function. Refer to "Quick Guide to Precision Measuring Instruments" on page G-18 for details of the RS link.
- Employs DIN size (144×72 mm) and mount-on-panel configuration to facilitate system integration.



542-075



542-071



542-073



542-072

SPECIFICATIONS

Order No.		542-075*	542-071*	542-073*	542-072*
Model		EH-101P	EH-102P	EH-102Z	EH-102D
Number of axes to be displayed		1 axis	2 axes		
Origin point detection function		—	—	✔	—
Maximum input frequency		2.5 MHz (2-phase square wave)			—
Resolution ( ) indicates maximum display range		0.01 mm (±9999.99 mm)/0.0005 in (±99.9995 in) 0.005 mm (±999.995 mm)/0.00005 in (±9.99995 in) 0.001 mm (±999.999 mm)/0.00005 in (±9.99995 in) 0.0005 mm (±99.9995 mm)/0.000005 in (±0.999995 in) 0.0001 mm (±99.9999 mm)/0.000005 in (±0.999995 in) [Parameter set]			Automatic setting by gage
Tolerance judgment display		LED display (3 steps: Amber, Green, Red / 5 steps: Amber, Amber flashing, Green, Red flashing, Red)			
Interface		RS-232C/USB/parameter selection via digimatic (only **DP-1VA LOGGER**, Digimatic Mini-Processor can be connected) (USB used only with **SENSORPAK**.) Selection by parameter from 3-step, 5-step, or simple BCD Total tolerance judgment output (when tolerance function is enabled) Analog output (1 V to 4 V)			
Input/output	Control output	Open-collector			
	Control input	Display BANK switching, peak mode, presetting, display hold, hold per axis: open-collector or no-voltage contact signal (with/without contact point)			
Power supply	Voltage	Supplied AC adapter, or 12 to 24 V DC			
	Consumption	8.4 W (max. 700 mA) Ensure at least 1 A is available per unit.			
Operating temperature (humidity) ranges		0 to 40 °C (RH 20 to 80%, non-condensing)			
Storage temperature (humidity) ranges		–10 to 50 °C (RH 20 to 80%, non-condensing)			
Standard Accessories		AC adapter: **357651**/ AC cable (Japan): **02ZAA000***, AC cable (USA): **02ZAA010***, AC cable (EU): **02ZAA020***, AC cable (UK): **02ZAA030***, AC cable (China): **02ZAA040***, AC cable (Korea): **02ZAA050***			
Applicable gage head		**LG100**/**LG200** A conversion plug **21HZA195** is required (The origin point detection function is disabled)		**LG100**/**LG200** A conversion plug **21HZA196** is required (The origin point detection function is disabled when connected to **LG200**)	**LGS**, **ID**
Mass		Approx. 760 g	Approx. 800 g	Approx. 800 g	Approx. 800 g

* To denote your AC power cable add the following suffixes to the order No.: A for UL/CSA, D for CEE, DC for CCC, E for BS, K for KC, C and No suffix are required for PSE.
For those models of the Order No. with Suffix "1", an AC adapter is not supplied as a standard accessory.

DIMENSIONS

Unit: mm

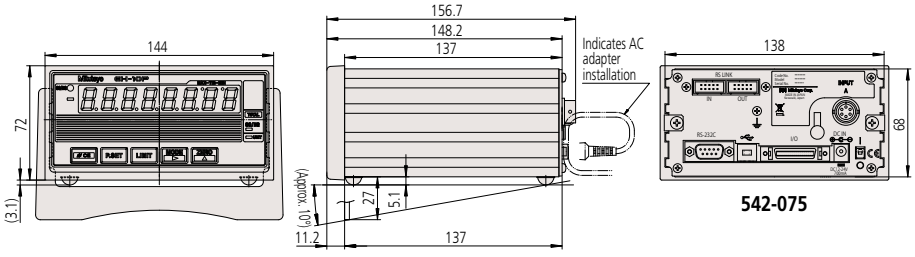

542-075

Mitutoyo reserves the right to change any or all aspects of any product specification, including prices, designs and service content, without notice.

EJ-102N/NE Counter, Interface Unit: CC-Link, PROFINET, EtherNet/IP, EtherCAT, USB
SERIES 542 — Linear Gage Counter

- A small, high-speed, space-saving counter for linear gage suitable for in-line and in-laboratory use. It brings visibility into the production site, improves productivity, and enables data accumulation.
- Up to 8 compact counters (**EJ** counters) can be linked providing the capacity to connect up to 16 gages.
- On a DIN rail, each unit can be connected directly without using cables, so it takes up minimal space. All linked units and gages can be driven by a single power source.
- Data can be output through an industrial interface (CC-Link) by linking a compact counter (**EJ** counter) with an interface unit. Constant data monitoring and positional management are performed. A USB interface is also provided for easy connection with a computer.
- Enables sum difference operations between 2 gages connected to the same counter.

Optional Accessories

- AC adapter: **357651**
- AC cable*: **02ZAA000** (Japan)
  02ZAA010 (USA)
  02ZAA020 (EU)
  02ZAA030 (UK)
  02ZAA040 (China)
  02ZAA050 (Korea)
- DC connector with bar terminal: **21HZA209***

* Required when using AC adapter.

Counter unit

EJ-102N/NE



Interface unit

CC-Link



PROFINET



EtherNet/IP



EtherCAT



USB



Image of mounting



SPECIFICATIONS

Order No.		542-080	542-081
Model		EJ-102N	EJ-102NE
Unit		mm	inch/mm
Resolution		0.005, 0.001, 0.0005, 0.0001 (mm)	0.0002, 0.00005, 0.00002, 0.000005 (inch)/ 0.005, 0.001, 0.0005, 0.0001 (mm)
Number of linear gage connection ports		2	
Supported gage signal		Differential square wave, differential square wave with reference point mark	
Maximum input frequency		5 MHz	
User Interface	Display	Negative sign + 8 digits and indicator (1 gage value displayed, manually switchable)	
External I/O	Number of I/O ports	Input: 4 ports (Ch switch, peak clear, data hold, preset) Output: 4 ports (Err/ALLGO, Tolerance judgment)	
	Compatible communication standards	CC-Link, USB (Supported with optional interface units)	
Max. number of linked units		EJ Counter 8 units + 1 (optional) interface unit (Max. number of linear gage connections: 16)	
Power supply	Input voltage	10 V to 27 V DC	
	Power consumption	1 unit only: 3 W or less (Includes 2 linear gages) Max. number of links: 30 W or less (Interface unit and 16 linear gages included)	
Operating temperature (humidity) ranges		0 to 50 °C (RH 20 to 80%, non-condensing)	
Storage temperature (humidity) ranges		-10 to 60 °C (RH 20 to 80%, non-condensing)	
Mass		Approx. 120 g	

Connectable linear gage Series	Conversion cable (optional)
LG100/LG200*	Not necessary
LGF-Z	Necessary (**21HZA194**)
LGF*/LGK*/LGB*/LG*	Necessary (**21HZA193**)

* The origin point detection function is disabled.

Order No.		21HZA186
Model		Interface unit CC-Link
Applicable interface		USB 2.0 Full Speed
		CC-Link Ver. 1.10
		CC-Link Ver. 2.00
User Interface	Display	POWER (green), RUN (green), ERROR (red), EJ-CONNECT (green)
	Switch	Rotary switch×3 (Exchange number settings×2, communication speed settings×1)
Functions		Common protocols for USB and CC-Link, Readout of current value*, Current value hold (software hold), Parameter setting on **EJ** counter, Tolerance judgment value settings, Preset value settings, preset/zero-set clear, peak clear, error clear * For CC-Link, Ver. 1.10 allows for transition only while Ver. 2.00 allows for both cyclic communication and transition.
Power supply		Power is supplied from **EJ-102N/NE** (**542-080**/**542-081**) (Cannot be charged via USB)
Operating temperature (humidity) ranges		0 to 50 °C (RH 20 to 80%, non-condensing)
Storage temperature (humidity) ranges		-10 to 60 °C (RH 20 to 80%, non-condensing)

Order No.	21HZA187
Model	Interface unit PROFINET
Applicable interface	PROFINET RT (RT Class1)/USB 2.0 Full Speed
User Interface	POWER (green), NETWORK (green/red), MODULE (green/red), LINK PORT1 (green), LINK PORT2 (green), EJ-CONNECT (green)
Functions	Common protocols for USB and PROFINET, Readout of current value, Current value hold (software hold), Parameter setting on **EJ** counter, Tolerance judgment value settings, Preset value settings, preset/zero-set clear, peak clear, error clear
Power supply	Power is supplied from **EJ-102N/NE** (**542-080**/**542-081**) (Cannot be charged via USB)
Operating temperature (humidity) ranges	0 to 50 °C (RH 20 to 80%, non-condensing)
Storage temperature (humidity) ranges	-10 to 60 °C (RH 20 to 80%, non-condensing)

Mitutoyo reserves the right to change any or all aspects of any product specification, including prices, designs and service content, without notice.

SPECIFICATIONS

Order No.	**21HZA188**
Model	**Interface unit EtherNet/IP**
Applicable interface	EtherNet/IP
User Interface	POWER (green), NETWORK (green/red), MODULE (green/red), LINK PORT1 (green/amber), LINK PORT2 (green/amber), EJ-CONNECT (green)
Functions	Common protocols for USB and EtherNet/IP Readout of current value, Current value hold (software hold), Parameter setting on **EJ** counter, Tolerance judgment value settings, Preset valuesettings, preset/zero-set clear, peak clear, error clear
Power supply	Power is supplied from **EJ-102N/NE** (**542-080**/**542-081**) (Cannot be charged via USB)
Operating temperature (humidity) ranges	0 to 50 °C (RH 20 to 80%, non-condensing)
Storage temperature (humidity) ranges	-10 to 60 °C (RH 20 to 80%, non-condensing)

Order No.	**21HZA149**
Model	**Interface unit USB**
Applicable interface	USB 2.0 Full Speed
User Interface	POWER (green)
Functions	Readout of current value, Current value hold (software hold), Parameter setting on **EJ** counter, Tolerance judgment value settings, Preset value settings, preset/zero-set clear, peak clear, error clear
Power supply	Power is supplied from **EJ-102N/NE** (**542-080**/**542-081**) (Cannot be charged via USB)
Operating temperature (humidity) ranges	0 to 50 °C (RH 20 to 80%, non-condensing)
Storage temperature (humidity) ranges	-10 to 60 °C (RH 20 to 80%, non-condensing)

Order No.	**21HZA264**
Model	**Interface unit EtherCAT**
Applicable interface	EtherCAT
User Interface	POWER (green), RUN (green), ERROR (red), L/A IN (green), L/A OUT (red), EJ-CONNECT (green)
Functions	Common protocols for USB and EtherCAT Readout of current value, Current value hold (software hold), Parameter setting on **EJ** counter, Tolerance judgment value settings, Preset valuesettings, preset/zero-set clear, peak clear, error clear
Power supply	Power is supplied from **EJ-102N/NE** (**542-080**/**542-081**) (Cannot be charged via USB)
Operating temperature (humidity) ranges	0 to 50 °C (RH 20 to 80%, non-condensing)
Storage temperature (humidity) ranges	-10 to 60 °C (RH 20 to 80%, non-condensing)

DIMENSIONS

Unit: mm

EJ-102N/NE

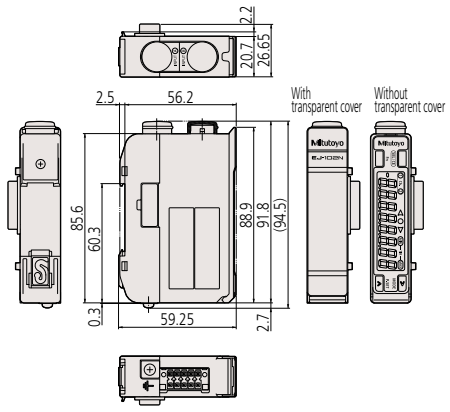

Interface unit CC-Link

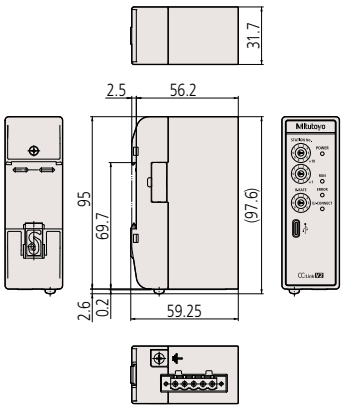

Interface unit PROFINET

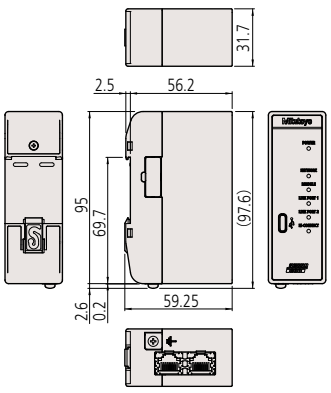

Interface unit EtherNet/IP

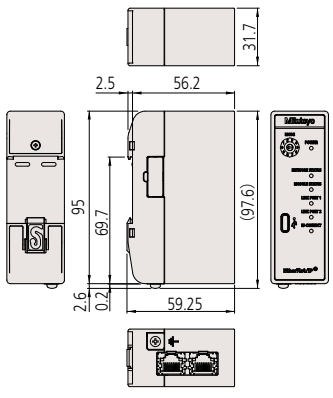

Interface unit EtherCAT

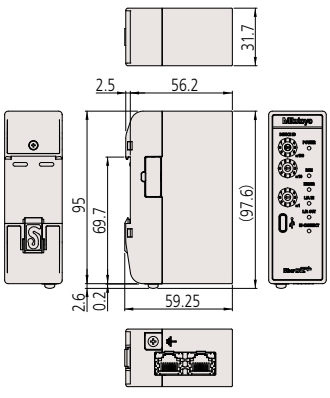

Interface unit USB

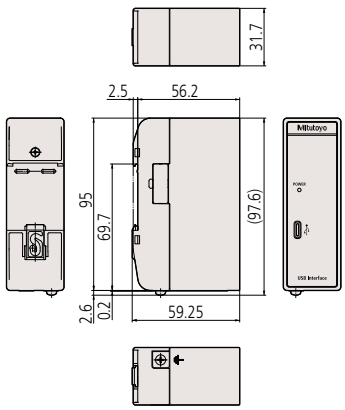

Note: Can be mounted on DIN rail. Case material: PC, POM

Mitutoyo reserves the right to change any or all aspects of any product specification, including prices, designs and service content, without notice.

LG QuickSetupTool Application Software

- A configuration tool is available for use with the **EJ** counter when connected via the optional USB interface.
- All kinds of settings normally carried out with counter operating keys can now be easily applied from a computer.
- Measurement value display and operation results can also be viewed on a PC.

Note: This software can be used free of charge and downloaded from the Mitutoyo website. https://www.mitutoyo.co.jp/eng/contact/products/lg/

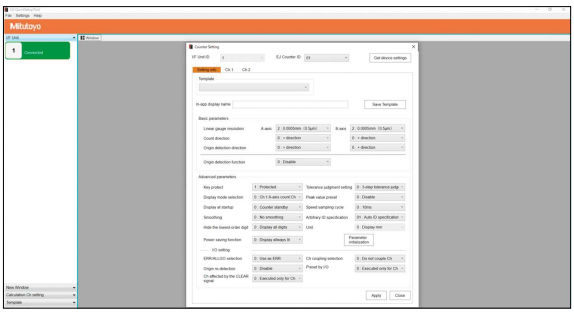

Parameter setting

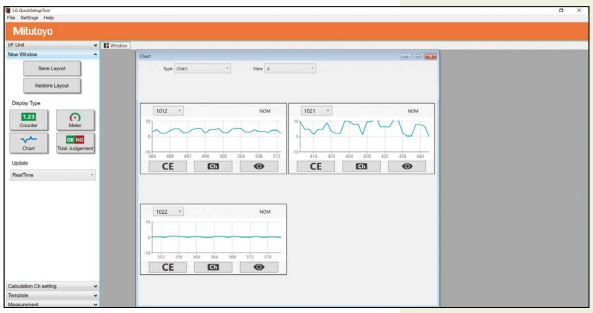

Chart

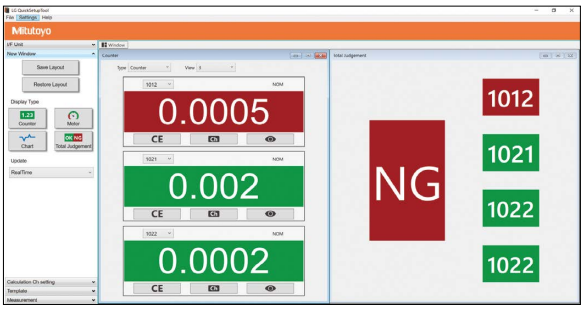

General settings

Recommended system environment

OS: Windows10 Pro 32 bit/64 bit
Display: 1600×1200 or more
Memory: 1024 MB or more
Communication method: USB2.0 (Full speed)
USB connector: Type C connector
Note: USB device drivers are standard Windows drivers.



Refer to the Linear Gage Brochure (**E13007**) for more details.

Mitutoyo reserves the right to change any or all aspects of any product specification, including prices, designs and service content, without notice.

MeasurLink® ENABLED
Data Management Software by Mitutoyo

MiCAT
Mitutoyo Intelligent Computer Aided Technology
the standard in world metrology software
SENSOR

SENSORPAK
Measurement data loading software

- This software facilitates loading measurement data onto a personal computer from a linear gage counter with RS-232C output (**EH**, **EV**), with USB output (**EH**), or from a Litematic display (**VL**).
- 60 channels (max.) of measurement data can be processed.
- Arithmetical calculations and maximum width calculations can be performed using the measurement data.
- Exporting measurement data into MS-Excel format is supported.
- Real time graphical display by means of bar-graph or meter is provided.


Measurement screen


License key

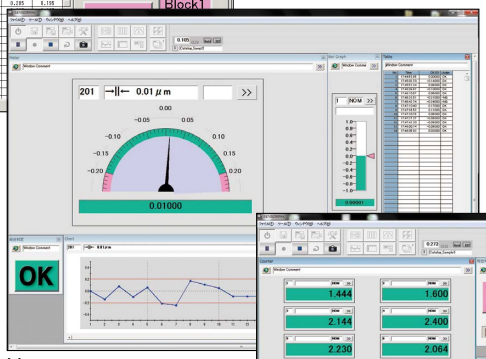
Meter screen

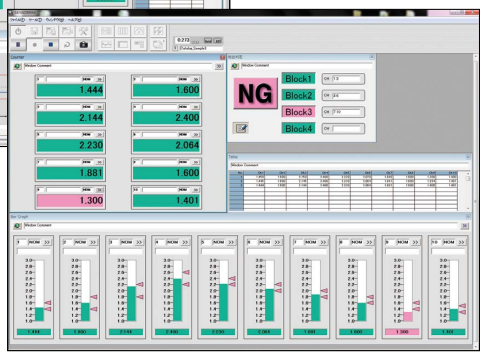
Chart screen

Optional Accessory

- I/O cable: **21HZA137**

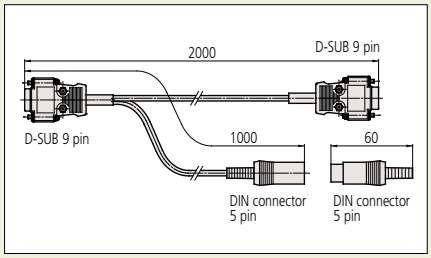



- Communication cable (1 pc.)
  Connection between PC and counter: 2 m
  Input/output cable: 1 m
- Input/output connector (1 pc.)



Refer to the Linear Gage Brochure (**E13007**) for more details.

SPECIFICATIONS

Order No.		**02NGB072**
Product Configuration		Program disk (CD), license key, operation manual
Compatible devices (Connection method)		Mitutoyo RS_LINK compatible devices • **LGH** Series (USB, RS-232C) • **EH** counter (USB, RS-232C) • **EV** counter (RS-232C) • Litematic VL (RS-232C)
Connecting cable		A cable should be prepared to the following specifications: Accessory • RS-232C connection: I/O cable (**21HZA137**)*1 Commercial product • USB connection: USB cable (type A to type B) • RS-232C connection: RS-232C cross cable*1
Number of connectable gages		Max. 60 units (when 10 units of **EV** counter for linear gage are connected via RS-Link)
Functions	Display*2	Display format: counting, bar graph, indicator, chart, and table Display cycle: 1s (when 60 gage units are connected, 1-window display, and no Excel output)
	Calculation	Calculation (up to 30 items) between designated gages is available. Calculation items: Sum, difference, total, average, maximum, minimum, range (maximum–minimum), calculation with a constant
	Tolerance judgment	Per item: Displays the result in colors (3-step tolerance: red/green/red; 5-step tolerance: red/yellow/green/yellow/red) Total judgment: Displays in colors (red/green) by monitoring the multiple gages and calculation result
	Recording*2	Items: channel values, calculation result, tolerance judgment, total tolerance judgment, timestamp Max. number of records: 60000 for software recording (with 6 gages connected); up to 9000 (with 60 gages connected) Output function: Direct output to Excel, CSV file output (compatible with MeasurLink®) Recording trigger: key, timer, external TRG
	Input/ output*3	Input: TRG for recording (HOLD) Output: Total tolerance judgment result
System Environment		DOS/V compatible PC environment CPU: Pentium4 2 GHz or more, Memory: 2 GB or more, Hard disk: 2 GB or more free space OS: Windows 7 (32 bit/64 bit), Windows 8.1 (32 bit/64 bit), Windows 10 (64 bit)

*1 If the PC is not equipped with an RS-232C port, please contact the nearest Mitutoyo sales office.
*2 Display cycle and the maximum number of records differ depending on the environment (specification of PC, number of connected gages, display format and communication setting).
*3 With use of the I/O cable (accessory). When an I/O cable is not used, the I/O connector of the counter alternatively functions. (Refer to the user's manual of the counter in use.)

Mitutoyo reserves the right to change any or all aspects of any product specification, including prices, designs and service content, without notice.

Mitutoyo

Gage Head

Plain Stem

The plain stem has the advantage of wider application and slight positional adjustment in the axial direction on final installation, although it does requires a split-fixture clamping arrangement or adhesive fixing. However, take care so as not to exert excessive force on the stem.

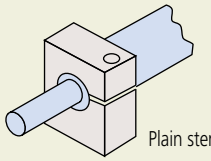

Measuring Force

This is the force exerted on a workpiece during measurement by the contact point of a linear gage head, at its stroke end, expressed in newtons.

Comparative Measurement

A measurement method where a workpiece dimension is found by measuring the difference in size between the workpiece and a master gage representing the nominal workpiece dimension.

Ingress Protection Code

Protection code	Type	Level	Description
IP66	Protection against contact with the human body and foreign objects	6: Dust tight	Protection from dust ingress Complete protection against contact
	Protection against exposure to water	6: Water-resistant type	Water jets directed against the enclosure from any direction shall have no harmful effects.
IP67	Protection against contact with the human body and foreign objects	6: Dust tight	Protection from dust ingress Complete protection against contact
	Protection against exposure to water	7: Immersion-protection	Protection against the effects of immersion in water between 1 cm and 1 m for 30 minutes
IP☐☐G	Protection against entry of oil	—	Protection against entry of oil droplets or splashes from all directions

Precautions in Mounting a Gage Head

- Insert the stem of the gage into the mounting clamp of a measuring unit or a stand and tighten the clamp screw.
- Notice that excessively tightening the stem can cause problems with spindle operation.
- Never use a mounting method in which the stem is clamped by direct contact with a screw.
- Never mount a linear gage by any part other than the stem.
- Mount the gage head so that it is in line with the intended direction of measurement. Mounting the head at an angle to this direction will cause an error in measurement.
- Exercise care so as not to exert a force on the gage through the cable.

Precautions in Mounting LGH Series

To fix the **LGH** Series, insert the stem into the dedicated stand or fixture.

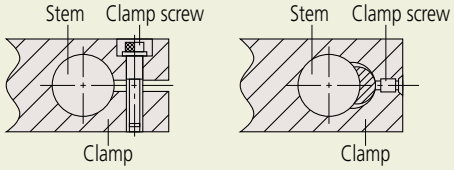

Recommended hole diameter on the fixing side: 15 mm +0.034/+0.014

- Machine the clamping hole so that its axis is parallel with the measuring direction. Mounting the gage at an angle will cause a measuring error.
- When fixing the **LGH** Series, do not clamp the stem too tightly. Over-tightening the stem may impair the sliding ability of the spindle.
- If measurement is performed while moving the **LGH** Series, mount it so that the cable will not be strained and no undue force will be exerted on the gage head.

Display Unit

Zero-setting

The display value can be set to 0 (zero) at any position of the spindle.

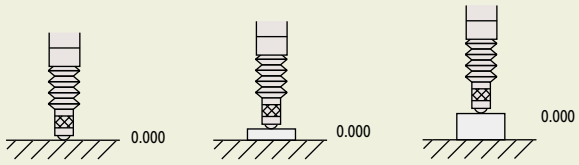

Note: Perform the zero-setting beyond 0.2 mm stroke from the rest position. This puts the spindle in the guaranteed accuracy region.

Presetting

Any numeric value can be set on the display unit for starting the count from this value.

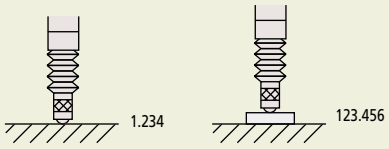

Note: Perform the zero-setting beyond 0.2 mm stroke from the rest position. This puts the spindle in the guaranteed accuracy region.

Direction Changeover

The measuring direction of the gage spindle can be set to either plus (+) or minus (-) of count.

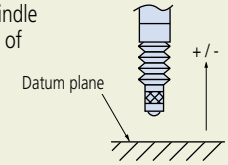

MAX, MIN, TIR Settings

The display unit can hold the maximum (MAX) and minimum (MIN) values, and the run out value (TIR) during measurement.

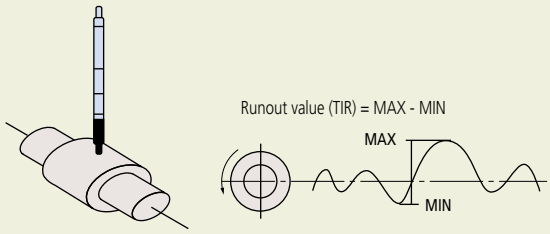

Tolerance Setting

Tolerance limits can be set in various display units for automatically indicating if a measurement falls within those limits.

Open-collector Output

An external load, such as a relay or a logic circuit, can be driven from the collector output of an internal transistor which is itself controlled by a Tolerance Judgment result, etc.

Digimatic Code

A communication protocol for connecting the output of measuring tools with various Mitutoyo data processing units. This allows output connection to a Digimatic Mini Processor **DP-1VA LOGGER** for performing various statistical calculations and creating histograms, etc.

BCD Output

A system for outputting data in binary-coded decimal notation.

RS-232C Output

A serial communication interface in which data can be transmitted bi-directionally under the EIA Standards. For the transmission procedure, refer to the specifications of each measuring instrument.

CC-Link

An abbreviation of Control & Communication Link, the new open field network developed by Mitsubishi Electric Corporation. It is a high-speed field network that allows for control and communication at the same time.

RS Link Function

Multi-point measurement can be performed by connecting multiple **EH** counters with RS Link cables.

RS Link for EH Counter

It is possible to connect a maximum of 10 counter units and handle up to 20 channels of multi-point measurement at a time.
For this connection use a dedicated RS Link cable **02ADD950** (0.5 m), **936937** (1 m) or **965014** (2 m).
(The overall length of RS Link cables permitted for the entire system is up to 10 m.)

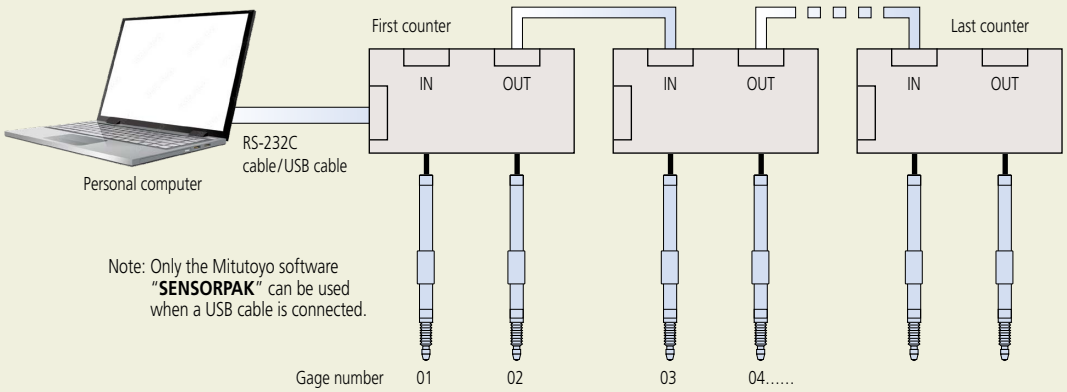

Measurement Examples

Roll gap measurement

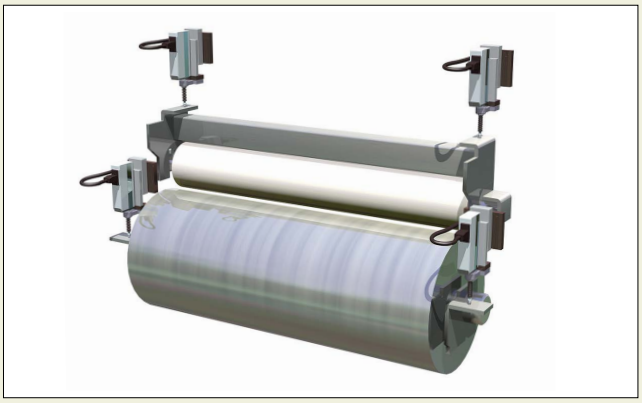

Chip parallelism measurement

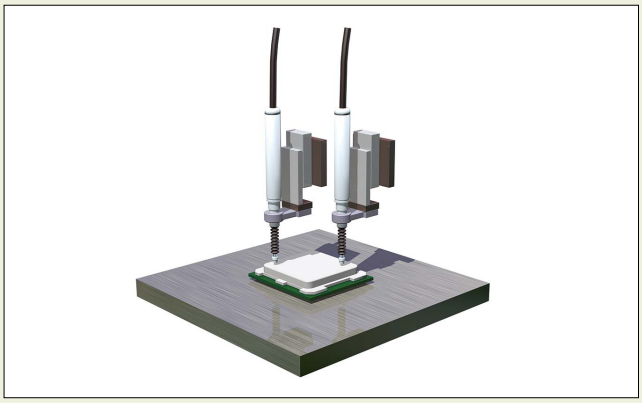

FPD board multipoint measurement

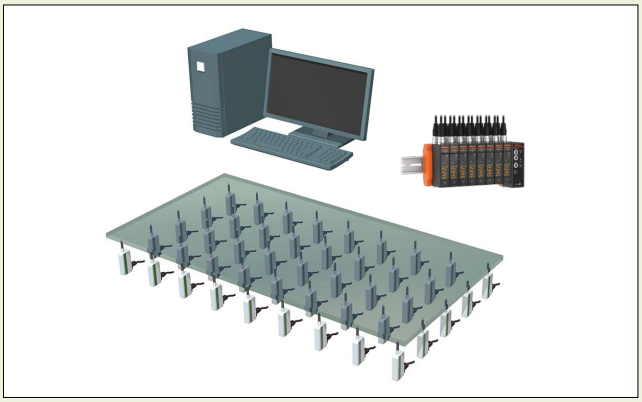

Cam-lift measurement

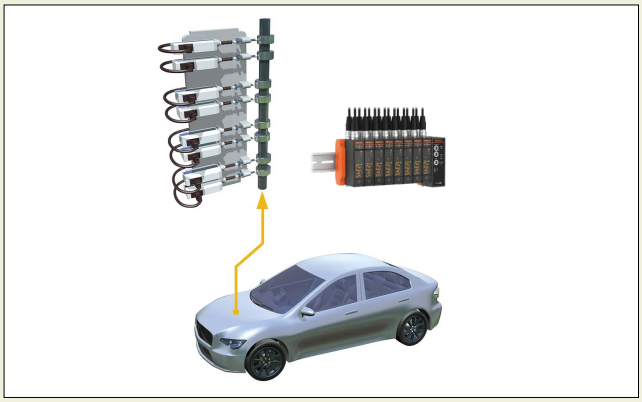

Brake disk multipoint measurement

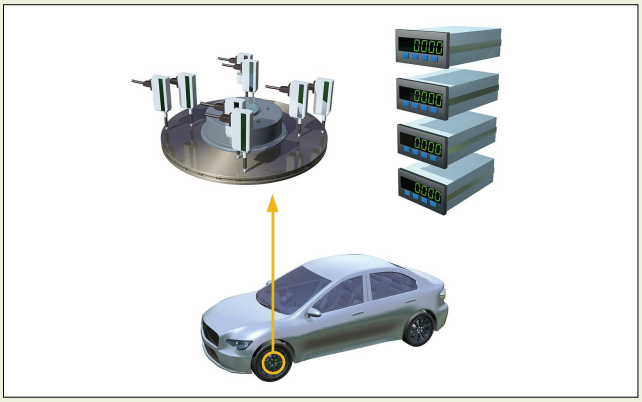

Machine device tool length measurement

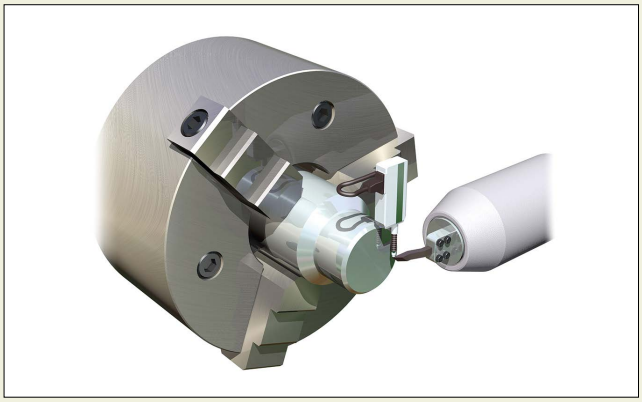

Workpiece discrimination

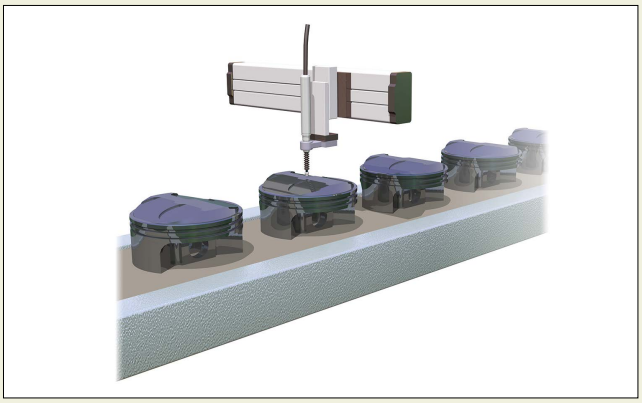

Inspection fixture

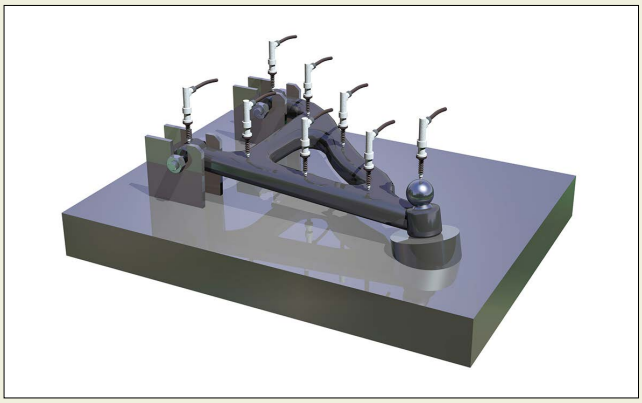

Optional Stand for VL-50S-B

957460 Unit: mm

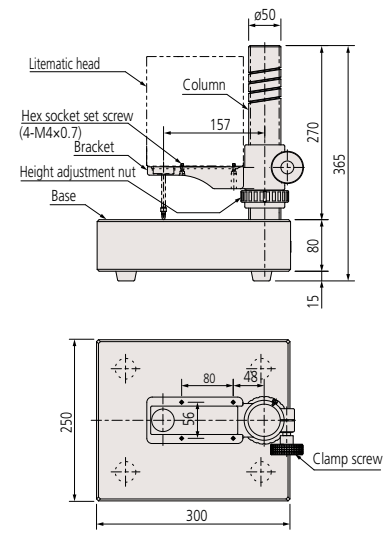

Optional Accessories

- Foot switch: **937179T**
- Dedicated stand: **957460***1
- SPC cable (1 m): **936937***2
- SPC cable (2 m): **965014***2
- VL weight part: **02AZE375***3
- Recommended spare contact points:
  Shell type: **101118** (Approx. 0.02 N)*4
  Carbide tipped spherical contact point, ø7.5:
  120059 (Approx. 0.03 N)*4
  Carbide tipped spherical contact point, ø10.5:
  120060 (Approx. 0.06 N)*4
  Carbide tipped needle contact point, ø0.45:
  120066 (Approx. 0.01 N)*4

*1 Only **VL-50S** is available.
*2 Refer to page G-18 for details of the RS link.
*3 Not applicable to **VL-50-100-B** and **VL-50S-100-B**
*4 Values in parentheses indicate the measuring force of a 0.01 N model fitted with the respective optional points

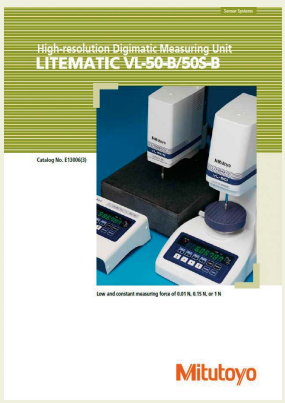

Refer to the Litematic Brochure (**E13006**) for more details.

VL-50-B/50S-B Litematic
SERIES 318 — High-accuracy/resolution Measuring Machine

- With a measuring force of only 0.01 N, the Litematic is ideal for measuring easily deformed workpieces or high-accuracy components.
- For workpieces for which 0.01 N is insufficient, either the 0.15 N or 1 N model is recommended.
- The motor-driven spindle moves up/down and stops when the contact point touches the workpiece. Then the maximum, minimum and runout values are measured under a constant force.
- High resolution of 0.01 µm, and wide measuring range of 50 mm.
- Measuring system **VL-50-B**, integrated display type, and **VL-50S-B**, a separate display type, are available.
- The measuring table supplied with **VL-50-B** is ceramic, which is corrosion free, for easier maintenance and storage.
- The spindle is made of low thermal expansion material.



318-221



318-226

SPECIFICATIONS

Order No.		318-221*4	318-222*4	318-223*4	318-226*4	318-227*4	318-228*4
Model		VL-50-B	VL-50-15-B	VL-50-100-B	VL-50S-B	VL-50S-15-B	VL-50S-100-B
Measuring range		0 to 50 mm (0 to 2 in)					
Resolution		0.01/0.1/1.0 µm (0.0000005 in/0.000005 in/0.00005 in)					
Display unit		8 digits/14 mm (0.6 in) character height (without signs)					
Scale type		Reflection type linear encoder					
Stroke		51.5 mm (2 in) (when using a standard contact point)					
Measuring accuracy (20 °C)*1		(0.5 + L/100) µm L=arbitrary measuring length (mm)					
Accuracy guaranteed temperature*2		20±1 °C					
Repeatability*1		σ=0.05 µm					
Measuring force*1		0.01 N	0.15 N*3	1 N*3	0.01 N	0.15 N*3	1 N*3
Feed speed	Measurement	Approx. 2 mm/s (0.08 in/s) or 4 mm/s (0.16 in/s) (changeable by parameter)					
	Fast feed	Approx. 8 mm/s (0.3 in/s)					
Contact point		ø3 mm carbide tipped (fixing screw: M2.5 (P=0.45) ×5), standard contact point: **901312**					
Measuring table		ø100 (ceramic, grooved, removable)			—		
Input		Foot switch input (when optional foot switch is used) External Control					
Output		Digimatic output/RS-232C output (changeable by parameter)					
Rating	Power supply	85 to 264 V AC (depends on AC adapter)					
	Power consumption	Max. 12 W (12 V, 1 A)					
Standard Accessories		AC adapter: **357651**, Grounding wire: **09CAA985**, AC cable (Japan): **02ZAA000**, AC cable (USA): **02ZAA010**, AC cable (EU): **02ZAA020**, AC cable (UK): **02ZAA030**, AC cable (China): **02ZAA040**, AC cable (Korea): **02ZAA050** Hex wrench (2 pcs. for fixing contact point and for removing fixing bracket)					

*1 Normal measurement using standard contact point.
*2 Under less temperature change, and hot or cold direct air flow should be avoided.
*3 0.15 N, 1 N types are factory-installed option.
*4 To denote your AC power cable add the following suffixes to the order No.: A for UL/CSA, D for CEE, DC for CCC, E for BS, F for SAA, K for KC, C and No suffix are required for PSE.
Note: Motor life is approximately 100,000 operations, after which replacement is advisable.
This maintenance factor is particularly important to bear in mind when the machine is used frequently, such as on a production line.

DIMENSIONS

Unit: mm

318-221

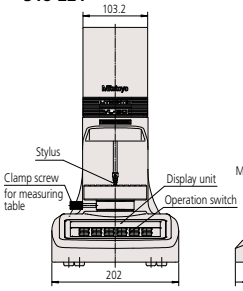

318-226

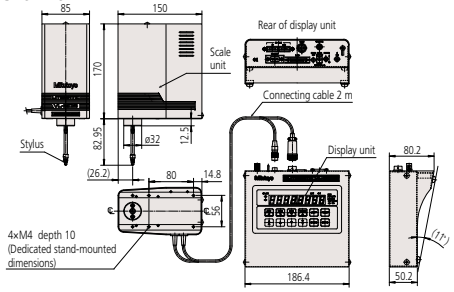

Mitutoyo reserves the right to change any or all aspects of any product specification, including prices, designs and service content, without notice.

Lever/Cartridge Probe Heads
SERIES 519 — Electronic micrometer

SPECIFICATIONS

Lever heads

Order No.	519-521	519-522	519-326	519-327
Model	MLH-521	MLH-522	MLH-326	MLH-327
Measuring range (mm)	±0.5			
Stroke (mm)	±0.6			±0.65
Measuring force (N)	Approx. 0.2	Approx. 0.02	Approx. 0.15	
Linearity (%)	±0.3			±0.5
Stylus support	Pivot bearing	Pivot bearing	Parallel-leaf spring	Pivot bearing

Note: A ø2 mm ball-ended stylus is supplied as standard with all probes.

Common specifications
- Connection: Half-bridge
- Cable length: 2 m
- Connector type: MAS-5100 (DIN5P) or equivalent

519-521
MLH-521

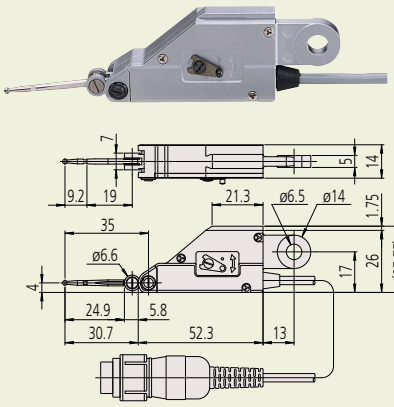

- Interchangeable styli:
  ø1: **520940** (Standard accessory)
  ø2: **520939** (Standard equipment)
  ø3: **520938** (Standard accessory)

Unit: mm

519-522
MLH-522

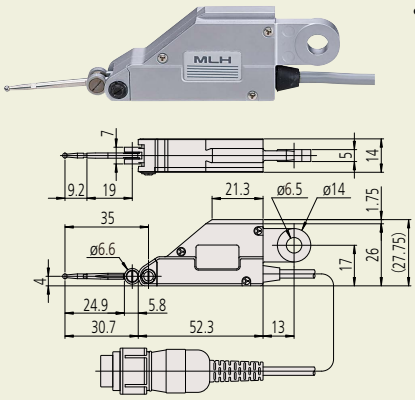

- Interchangeable styli:
  ø1: **520940** (Standard accessory)
  ø2: **520939** (Standard equipment)
  ø3: **520938** (Standard accessory)

Unit: mm

519-326
MLH-326

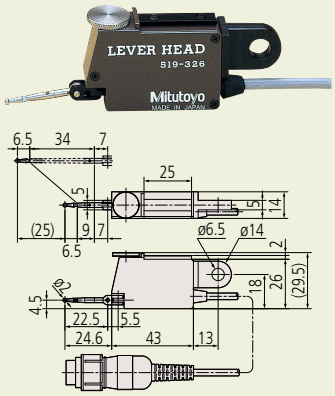

- Interchangeable styli:
  ø1: **102824** (Optional)
  ø2: **102825** (Standard equipment)
  ø3: **102826** (Optional)
- Extension bar
  L=9 mm (Standard equipment)
  L=34 mm (When a bar for extending the distance to the stylus tip is supplied)

Unit: mm

519-327
MLH-327

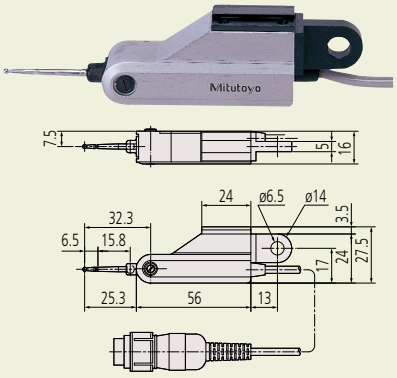

- Interchangeable styli:
  ø1: **102824** (Optional)
  ø2: **102825** (Standard equipment)
  ø3: **102826** (Optional)

Unit: mm

Transfer Stand



519-109-10
(with a serrated plate)

Unit: mm

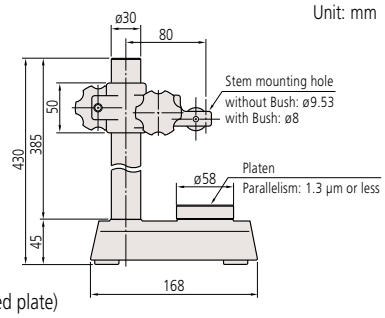

Main Specifications

Order No.	Effective transfer range (mm)	Fine adjustment range (mm)	Mounting hole (mm)
519-109-10	0 - 320	1	Without Bush: ø9.53 With Bush: ø8

Note on stylus angle

If the stylus of a pivot bearing type probe makes an angle with a workpiece surface, as in the figure, calibration should be performed for accurate measurement. Alternatively, the displayed value may be corrected by multiplying it by the appropriate correction factor as given in the table.
Model **519-326** does not need correction.

Angle (θ)	Correction factor
0°	1.00
10°	0.98
20°	0.94
30°	0.87
40°	0.77
50°	0.64
60°	0.50

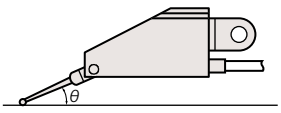

Display value × Correction factor = Corrected value

Dimensions of dovetail plate on probe body

Enables mounting on a lever head mounting bracket or stem.

Unit: mm

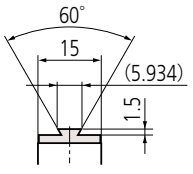

Mitutoyo reserves the right to change any or all aspects of any product specification, including prices, designs and service content, without notice.

Lever-head mounting brackets (optional)

Optional accessories for Mitutoyo test indicators can be used.

Stems



ø4 dovetail-grooved stem
21CZB131



ø6 dovetail-grooved stem
21CZB128



ø8 dovetail-grooved stem
21CZB129



ø9.5 dovetail-grooved stem
21CZB130

Clamp



Clamp for ø6/8 dovetail-grooved stem
902053



Clamp for ø6/9.5 dovetail-grooved stem
900320

Unit: mm

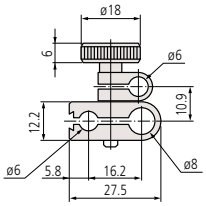

902053

Holder



Holding arm A (Square 9×9, Length 100)
900209



Holding arm B (ø8, Length 115)
900211

SPECIFICATIONS

Cartridge heads (special order only)

Order No.	519-331	519-332	519-346	519-347	519-385	519-341	519-348
Model	MCH-331	MCH-332	MCHS-346	MCHS-347	MCH-385	MCHP-341	MCHS-348
Measuring range (mm)	±0.5	±0.5	±0.25	±0.5	±1.5	±2.5	±1.0
Stroke (mm)	±0.65	±0.65	+0.34 −0.26	+0.85 −0.65	+2.35 −1.65	+3.2 −2.8	+1.35 −1.15
Measuring force (N)	Approx. 0.25	Approx. 0.25	Approx. 0.7	Approx. 0.7	Approx. 0.7	Approx. 0.9	Approx. 0.7
Stem Dia. (mm)	ø8	ø3/8 in	ø8	ø8	ø8	ø8	ø8
Linearity (%)	±0.5	±0.5	±0.3	±0.3	±0.3	±0.5	±0.3
Plunger support	Plain bearing		Linear ball-bearing				

519-331 / (519-332)
MCH-331 / (MCH-332)

- M2.5×5 (4-48 UNF) interchangeable contact points for dial indicators can be used.



Unit: mm

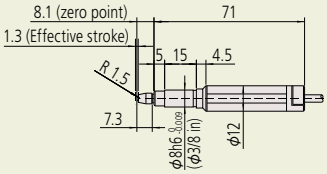

519-346
MCHS-346

- Dedicated contact point only that cannot be replaced.



Unit: mm

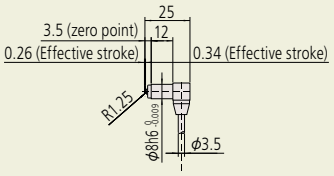

519-347
MCHS-347

- Dedicated contact point only that cannot be replaced.



Unit: mm

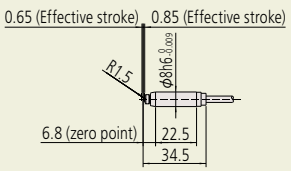

519-385
MCH-385

- M2.5×5 interchangeable contact points for dial indicators can be used.



Unit: mm

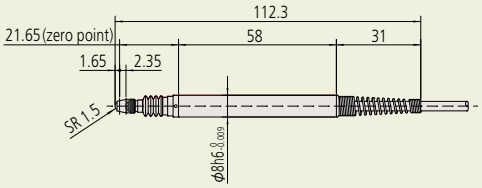

519-341
MCHP-341

- M2.5×5 interchangeable contact points for dial indicators can be used.
- Recommended air pressure 0.05 MPa



Unit: mm

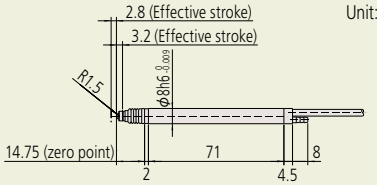

519-348
MCHS-348

- M2.5×5 interchangeable contact points for dial indicators can be used.



Unit: mm

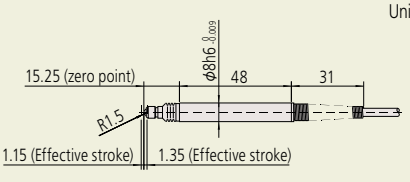

G

Mitutoyo reserves the right to change any or all aspects of any product specification, including prices, designs and service content, without notice.

Display unit for Mu-checker (analog/digital)
SERIES 519 — Electronic micrometer

- Single touch zero-set function is standard.
- Switchable measurement ranges make the Mu-checker suitable for a range of applications, especially those that involve moderately fast-changing measurement values which suit the use of analog readout.
- Two types of analog display are available and one digital type.

Analog Mu-checker



Standard type
519-551
M-551



Differential type
519-553
M-553

SPECIFICATIONS

	Metric		Inch	
Order No.	**519-551***	**519-553***	**519-552***	**519-554***
Model	**M-551**	**M-553**	**M-552**	**M-554**
Type	Standard type (one probe required)	Differential type (one/two probes required)	Standard type (one probe required)	Differential type (one/two probes required)
Display range	±5 µm/±15 µm/±50 µm/±150 µm/±500 µm/±1500 µm		±5 µm/±15 µm/±50 µm/±150 µm/±500 µm/±1500 µm ±0.00015 in/±0.0005 in/±0.0015 in/±0.005 in/±0.015 in/±0.05 in	
Graduation	0.1 µm/0.5 µm/1 µm/5 µm/10 µm/50 µm		0.1 µm/0.5 µm/1 µm/5 µm/10 µm/50 µm 0.000005 in/0.00001 in/0.00005 in/0.0001 in/0.0005 in/0.001 in	
Differential mode	±A	±A, ±B, ±A±B	±A	±A, ±B, ±A±B
Display accuracy (linearity)	±1% of full-scale reading			
Analog output	±1.0 V at full-scale reading			
Analog output accuracy	Within ±0.1% of full-scale reading (excluding probe)			
Zero-setting adjustment range	±15%/FS (error: ±0.2%/FS)			
External dimensions	134 (W) ×183 (D) ×208 (H) mm			
Mass	2.4 kg			
Power input	AC adapter 100, 120, 220, 240 V AC 50/60 Hz			
Probe	Various probes (refer to pages G-21 and G-22)			

* To denote your AC power cable add the following suffixes to the order No.: A for UL/CSA, D for CEE, DC for CCC, E for BS, K for KC, C and No suffix are required for PSE.

Digital Mu-checker



Digital Mu-checker
519-561
M-561

SPECIFICATIONS

	Metric	Inch
Order No.	**519-561***	**519-562***
Model	**M-561**	**M-562**
Type	Differential type digital Mu-Checker (2 connecting heads)	
Display range	±2.000 mm/±0.2000 mm	±2.000 mm/±0.2000 mm/±0.08 in/±0.008 in
Resolution	0.001 mm/0.0001 mm	0.001 mm/0.0001 mm/0.00005 in/0.000005 in
Differential mode	±A, ±B, ±A±B	
Measurement mode	ABS/CMP	
Analog output	±1 V at full-scale reading	
Digital output	Digimatic code out	
External dimensions	134 (W) ×183 (D) ×208 (H) mm	
Mass	Approx. 2.6 kg	
Power input	AC adapter 100, 120, 220, 240 V AC 50/60 Hz	
Probe	Various probes (refer to pages G-21 and G-22)	

* To denote your AC power cable add the following suffixes to the order No.: A for UL/CSA, D for CEE, DC for CCC, E for BS, K for KC, C and No suffix are required for PSE.

Optional Accessories

- SPC Cable for connecting digital Mu-checker (**936937**)
  Used for connecting to the Digimatic mini-processor. (Not suitable for analog Mu-checkers)
- Output cable A (**934795**)
  Used for connecting to external devices, such as data recorders, etc.

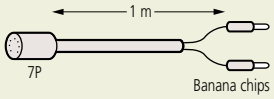

- Analog, limit out (7P) connector (**529035**)
  Used for output to external data recorders, sequencers, etc.

Mitutoyo reserves the right to change any or all aspects of any product specification, including prices, designs and service content, without notice.

Main features

- External control (Zero-set, Preset etc.)
- Direction switching
- Error messaging
- Tolerance judgment output
- Each data output (RS-232C, BCD, segment)
- Peak measurement (maximum value, minimum value, runout) and arithmetic operation (addition, average, maximum value, minimum value, maximum width) between axes

Optional Accessories

- Output connector: **02ADB440**
- D-EV External display unit*1: **02ADD400**
- SPC cable (0.5 m): **02ADD950**
- SPC cable (1 m): **936937**
- SPC cable (2 m): **965014**
- AC adapter: **357651**
- AC cable (Japan): **02ZAA000***2
- AC cable (USA): **02ZAA010***2
- AC cable (EU): **02ZAA020***2
- AC cable (UK): **02ZAA030***2
- AC cable (China): **02ZAA040***2
- AC cable (Korea): **02ZAA050***2
- Terminal connecting cable: **02ADD930***2

*1 Refer to page G-25 for details of **D-EV**.
*2 Required when using AC adapter.

- **SENSORPAK**

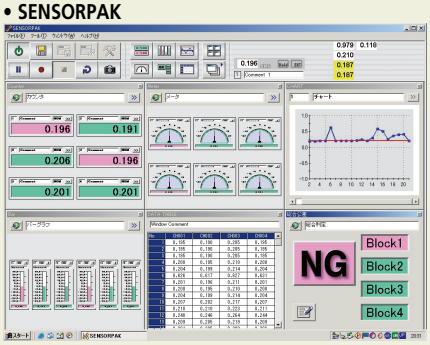

Note: Refer to page G-16 for more details.

EV-16A Counter
SERIES 519 — 6-channel, No-display Type



519-355
EV-16A

- Up to six probes can be connected to one unit. Up to ten counters can be connected to one personal computer using the RS Link function to enable the configuration of a multi-point measurement system comprising a maximum of 60 gages.
- I/O outputs for RS-232C, BCD, tolerance judgment and segment output are available.
- Maximum, minimum and runout measurement between channels (in the same unit) is possible in addition to normal measurement on individual channels.

SYSTEM CONFIGURATION

Mitutoyo probes, **EV-16A** counters and **D-EV** display units combined with commercial controllers and personal computers enable construction of a powerful, multi-channel system that can be built to meet the needs of almost any measurement application.

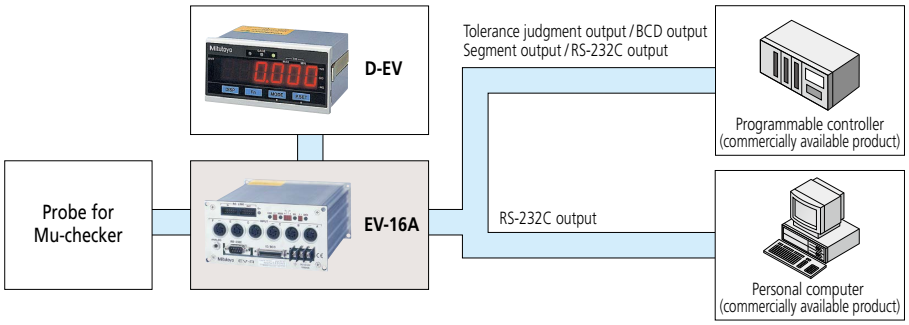

DIMENSIONS

Unit: mm

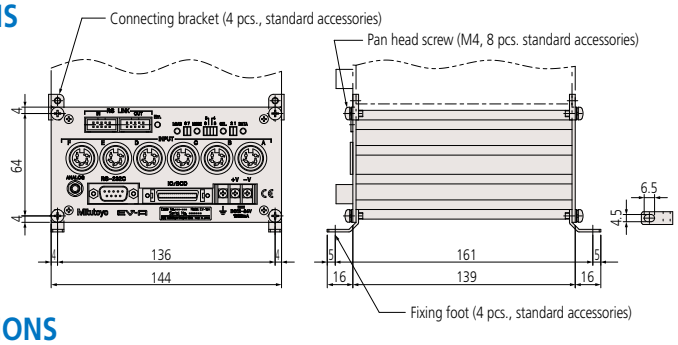

SPECIFICATIONS

Order No.		519-355
Model		EV-16A
Number of gage inputs		6
Display range (mm)		±2.000, ±0.200
Resolution (mm)		0.001, 0.0001
Display processing		8 digits for parameters (display setting), 1 for error display
Error messaging		Power supply voltage error, Gage error, etc.
External display		Dedicated external display unit **D-EV** (optional) can be connected
Number of input switches		4
Input switch function		Measurement mode switching, Parameter settings
I/O	Tolerance judgment output	1 to 6 gages (L1, L2, L3), open-collector
	BCD output	Parallel BCD output (positive/negative-true logic), open-collector
	Segment output	A function to enable only output from the terminal corresponding to the counting values, open-collector
	Control output	Normal operation signal (NOM), open-collector
	Control input	Output channel designation (segment, in BCD mode), presetting, peak value clear, range changeover (at segment output), holding counting value, open-collector or no-voltage contact signal (with/without contact point)
Interface	RS-232C	Measurement data output and control input, EIA RS-232C-compatible Use cross cables for home position DTE (terminal definition)
	RS link	Max. connected units: 10 Connecting cable length: Max. 10 m (sum of link cable length) Data transfer time: 1.1 sec./60 ch (when transmission rate is 19200 bps)
Power supply	Voltage	12 to 24 V DC (Terminal block: M3)
	Consumption	1 A
Operating temperature (humidity) ranges		0 to 40 °C (RH 20 to 80%, non-condensing)
Storage temperature (humidity) ranges		-10 to 50 °C (RH 20 to 80%, non-condensing)
External dimensions		144 (W) ×72 (H) ×139 (D) mm
Mass		Approx. 1000 g
Standard accessories		Fixing foot (4), connecting bracket (4), fixing screw M4×8 (8)
Applicable probes		For probes, refer to pages G-21 and G-22.

Mitutoyo reserves the right to change any or all aspects of any product specification, including prices, designs and service content, without notice.

D-EV
Display unit for the EV counter

- Display unit for the **EV** counter.
- Connecting this display unit helps configuration of the **EV** counter.
- Able to display each gage measurement value and GO/NG judgment result, total GO/NG judgment result for all gages, setting details, and errors.

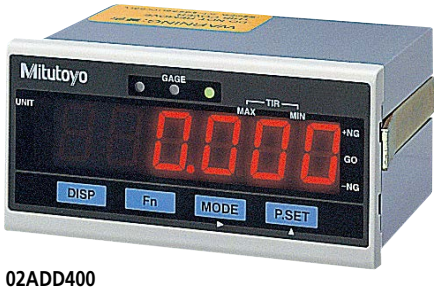

02ADD400

Optional Accessories

- AC adapter: **357651**
- AC cable (Japan): **02ZAA000***
- AC cable (USA): **02ZAA010***
- AC cable (EU): **02ZAA020***
- AC cable (UK): **02ZAA030***
- AC cable (China): **02ZAA040***
- AC cable (Korea): **02ZAA050***
- Terminal connecting cable: **02ADD930***

* Required when using AC adapter.

SPECIFICATIONS

Order No.	**02ADD400**
Model	**D-EV**
Number of connections	1 **EV** counter per unit
Number of digits	Sign plus 6 digits (8 digits internal to **EV** counter)
LED display	Channel display (also for judgment result display): 3 (3-color LED) Measurement mode display (current data, maximum value, minimum value, runout): 2 Status display: 1 (2 colors)
Operation switches	4
Function of operation switch	Channel switching, measurement mode switching (current data, maximum value, minimum value, runout), parameter setting, presetting, tolerance setting
Input/output	RS Link connectors: 1 each for IN, OUT
Error message	Overspeed, gage error etc.
Power supply	12 to 24 V DC, 200 mA (Terminal block: M3)
Operating temperature (humidity) ranges	0 to 40 °C (RH 20 to 80%, non-condensing)
Storage temperature (humidity) ranges	–10 to 50 °C (RH 20 to 80%, non-condensing)
External dimensions	96 (W) ×48 (H) ×84.6 (D) mm
Mass	150 g

DIMENSIONS

Unit: mm

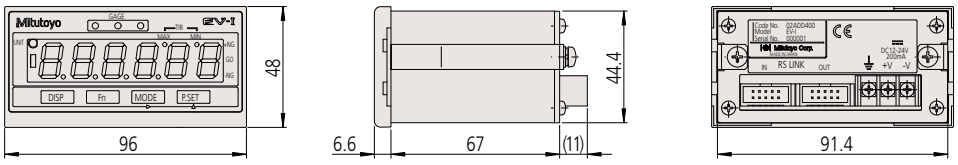

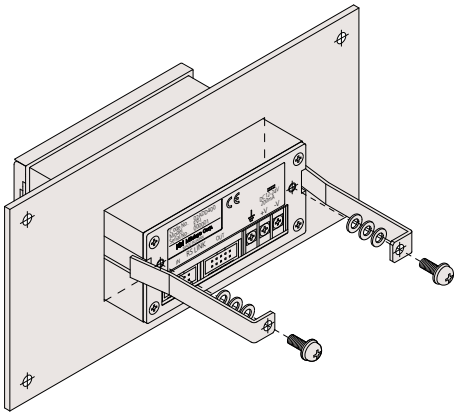

Mitutoyo reserves the right to change any or all aspects of any product specification, including prices, designs and service content, without notice.

Quick Guide to Precision Measuring Instruments

Mu-checker

Probe
A sensor that converts movement of a contact point, on a stylus or plunger, into an electrical signal.

Lever probes
Lever probes are available in two types. The most common type uses a pivoted stylus so the contact point moves in a circular arc; this type is subject to cosine effect and, therefore, measurements may require linearity correction if the direction of measurement is much different to the direction of movement of the contact point. The less common type uses a parallel translation leaf-spring mechanism so contact point movement is linear; this type requires no correction.

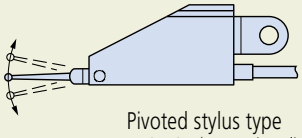

Pivoted stylus type
519-521 (measuring direction can be switched with the up/down lever)
519-522 (measuring direction is not switchable)

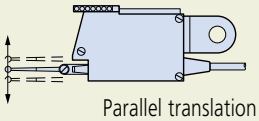

Parallel translation type
519-326 (measuring direction can be switched with the upper dial)

Pre-travel
The distance from first contact with a workpiece until the measurement indicator reads zero.

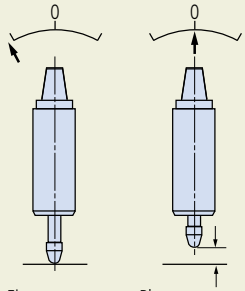

First contact. Plunger moves until the indicator reads zero.

Measuring force
The force applied to the workpiece by the probe when the indicator registers zero. It is indicated in newtons (N).

Digimatic code
A communication protocol for connecting the output of measuring tools with various Mitutoyo data processing units. This allows output connection to a Digimatic Mini Processor **DP-1VA LOGGER** for performing various statistical calculations and creating histograms, etc.

Open-collector output
A direct connection to the collector of a driving transistor.

Comparative measurement
A measurement method where a workpiece dimension is found by measuring the difference in size between the workpiece and a master gage that represents the nominal dimension.
This method is usually applied when the measurement to be made is greater than the measuring range of the instrument.

Linearity
The ratio of proportionality between measuring system output and measured distance.
If this is not constant within acceptable limits then correction is required.

0 (zero) point
A reference point on the master gage in a comparative measurement.

Sensitivity
The ratio of the electric micrometer output signal to the input signal to the amplifier. The sensitivity is normal if a value as expected from the given displacement is displayed.

Tolerance setting
Tolerance limits can be set on the electronic micrometer to provide an automatic judgment as to whether a measured value falls within the tolerance.

Lever-head angle
Before measurement, be sure to confirm that probe sensitivity adjustment has been completed.
Changing the probe angle will cause variation in the measured values.
Adjust the probe angle to obtain an optimum sensitivity before starting measurement. If it is difficult, adjust the sensitivity with the probe angle set to 0°, and after measurement, correct the measured values according to the actual probe angle (by multiplying the measured value by a correction factor).

Tips Correction using a correction factor may result in lower accuracy than when adjusting sensitivity with the actual probe angle.

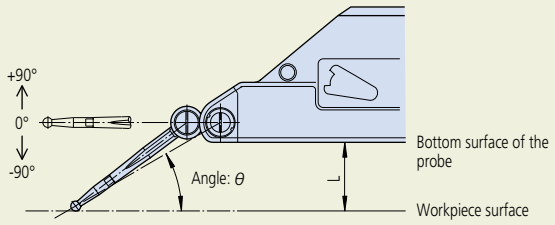

Angle: θ	Distance from the workpiece surface: L *	Correction factor
0°	—	1.00
10°	Approx. 3.1 mm	Approx. 0.98
20°	Approx. 8.8 mm	Approx. 0.94
30°	Approx. 13.9 mm	Approx. 0.87
40°	Approx. 18.3 mm	Approx. 0.77
50°	Approx. 21.6 mm	Approx. 0.64
60°	Approx. 23.8 mm	Approx. 0.50

* Value when using a carbide probe with spherical diameter of ø2 that is installed before shipment. When using a ø1 (or ø3) carbide probe, subtract (or add) 1/2 of the difference in spherical diameter.

LSM-500S Measuring Unit
SERIES 544 — 5 µm to 2 mm Measuring Unit

- Capable of measuring down to 5 µm outside diameter.
- Provides ultra-high accuracy of ±0.3 µm over the entire measuring range (5 µm to 2 mm).



With signal cable (5 m)
02AGN770A

SPECIFICATIONS

Order No.		544-531	544-532
Model		LSM-500S	
Applicable laser standards		JIS	IEC, FDA
User's Manual		Japanese version	English version
Measuring range		0.005 to 2 mm*1	
Resolution		0.01 to 10 µm (selectable)	
Repeatability*2		±0.03 µm	
Linearity*3 (20 °C)		±0.3 µm	
Positional error*4		±0.4 µm	
Measuring region*5		1×2 mm (0.005 to 2 mm)	
Scanning rate		3200 scans/s	
Laser wavelength		650 nm (Visible)	
Laser scanning speed		76 m/s	
Operating environment	Temperature	0 to 40 °C	
	Humidity	RH 35 to 85% (non-condensing)	
Protection Level		IP64*6	

*1 The measuring range for a transparent object is 0.05 mm to 2 mm. Please consult your local Mitutoyo office for objects smaller than 0.05 mm.
The measuring range is 0.1 mm to 2 mm in the 1 to 255 edge measurement mode or when activating automatic workpiece detection.
*2 Determined at the level of ±2σ (σ: standard deviation) when measuring ø2 mm at the interval of 0.32 sec. (average 1024 times).
*3 Applies at the center of the measuring range when measuring outside diameters.
*4 An error in outside diameter measurement due to variation in workpiece position either in the optical axis direction or in the scanning direction.
*5 The area defined by [optical axis depth]×[scanning width].
*6 The protection level provided for the interior. If the workpiece or glass of the measuring unit window is soiled by water or dust, the unit may malfunction.
Note 1: If using the optional dual connection unit for **LSM-6200**, the measuring range will be 0.05 mm to 2 mm.
Note 2: When using the extra-fine line measurement function (FINE), guide messages for setting the following will not be displayed: dual-measurement, segment designation, automatic workpiece detection, and group judgment.

LSM-501S Measuring Unit
SERIES 544 — 50 µm to 10 mm Measuring Unit

- Provides ultra-high accuracy of ±0.5 µm over the entire measuring range (0.05 to 10 mm).
- The industry's first narrow-range accuracy performance in this measuring range of ±(0.3+0.1ΔD) µm is available for high-accuracy measurement.



With signal cable (5 m)
02AGN770A

SPECIFICATIONS

Order No.		544-533	544-534
Model		LSM-501S	
Applicable laser standards		JIS	IEC, FDA
User's Manual		Japanese version	English version
Measuring range		0.05 to 10 mm	
Resolution		0.01 to 10 µm (selectable)	
Repeatability*1		±0.04 µm	
Linearity*2 (20 °C)	Whole range	±0.5 µm	
	Narrow range	±(0.3+0.1ΔD) µm*3	
Positional error*4		±0.5 µm	
Measuring region*5		2×10 mm (0.05 to 0.1 mm) 4×10 mm (0.1 to 10 mm)	
Scanning rate		3200 scans/s	
Laser wavelength		650 nm (Visible)	
Laser scanning speed		113 m/s	
Operating environment	Temperature	0 to 40 °C	
	Humidity	RH 35 to 85% (non-condensing)	
Protection Level		IP64*6	

*1 Determined at the level of ±2σ (σ: standard deviation) when measuring ø10 mm at the interval of 0.32 sec. (average 1024 times).
*2 Applies at the center of the measuring range when measuring outside diameters.
*3 ΔD=Difference in diameter between the master gage and workpiece. (Unit: mm)
*4 An error in outside diameter measurement due to variation in workpiece position either in the optical axis direction or in the scanning direction.
*5 The area defined by [optical axis depth]×[scanning width].
*6 The protection level provided for the interior. If the workpiece or glass of the measuring unit window is soiled by water or dust, the unit may malfunction.

Optional Accessories

• Multifunctional display unit, **LSM-6200**:

Order No.	Display type	Remarks
544-071	Japanese mm/E	Japanese user's manual
544-071*	English mm/E	English user's manual
544-072*	English mm/in	

* To denote your AC power cable add the following suffixes to the order No.: A for UL/CSA, D for CEE, DC for CCC, E for BS, F for SAA, K for KC, C and No suffix are required for PSE."

• Panel-mount type display unit, **LSM-5200**:

Order No.	Remarks
544-046	Japanese user's manual
544-047	English user's manual

• Standard calibration gage set (ø0.1, ø2.0) : **02AGD110**
• Guide pulley : **02AGD200**
• Air blower : **02AGD220**
• Extension signal cable (max. 15 m)

Order No.	Cable length
02AGN780A	5 m
02AGN780B	10 m
02AGN780C	15 m

DIMENSIONS

Unit: mm

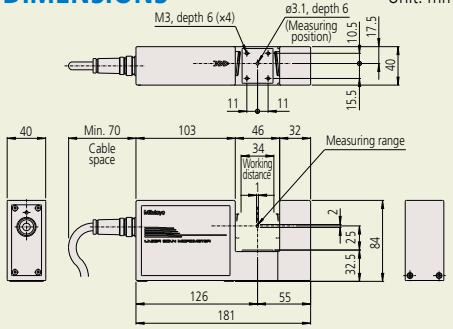

Optional Accessories

• Multifunctional display unit, **LSM-6200**:

Order No.	Display type	Remarks
544-071	Japanese mm/E	Japanese user's manual
544-071*	English mm/E	English user's manual
544-072*	English mm/in	

* To denote your AC power cable add the following suffixes to the order No.: A for UL/CSA, D for CEE, DC for CCC, E for BS, F for SAA, K for KC, C and No suffix are required for PSE."

• Panel-mount type display unit, **LSM-5200**:

Order No.	Remarks
544-046	Japanese user's manual
544-047	English user's manual

• Standard calibration gage set (ø0.1, ø10.0): **02AGD120**
• Wire guiding pulley : **02AGD210**
• Adjustable workstage : **02AGD400**
• Air blower : **02AGD230**
• Workstage : **02AGD270**
• Extension signal cable (max. 15 m)

Order No.	Cable length
02AGN780A	5 m
02AGN780B	10 m
02AGN780C	15 m

• Extension relay cable

Order No.	Cable length
02AGC150A	1 m

DIMENSIONS

Unit: mm

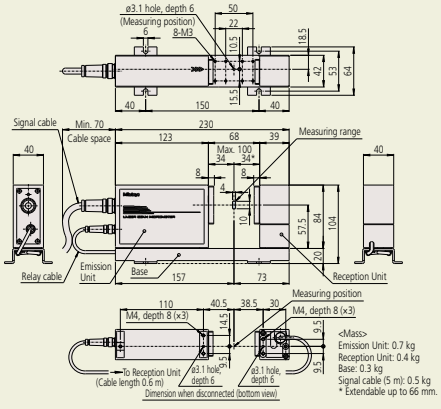

Mitutoyo reserves the right to change any or all aspects of any product specification, including prices, designs and service content, without notice.

Optional Accessories

• Multifunctional display unit, **LSM-6200**:

Order No.	Display type	Remarks
544-071	Japanese mm/E	Japanese user's manual
544-071*	English mm/E	English user's manual
544-072*	English mm/in	

* To denote your AC power cable add the following suffixes to the order No.: A for UL/CSA, D for CEE, DC for CCC, E for BS, F for SAA, K for KC, C and No suffix are required for PSE."

• Panel-mount type display unit, **LSM-5200**:

Order No.	Remarks
544-046	Japanese user's manual
544-047	English user's manual

• Standard calibration gage set (ø1.0, ø30.0) : **02AGD130**
• Adjustable workstage : **02AGD490**
• Air blower : **02AGD240**
• Workstage : **02AGD270**
• Extension signal cable (max. 25 m)

Order No.	Cable length
02AGN780A	5 m
02AGN780B	10 m
02AGN780C	15 m
02AGN780D	20 m

• Extension relay cable (max. 5 m)

02AGC150A	1 m
02AGC150B	3 m
02AGC150C	5 m

DIMENSIONS

Unit: mm

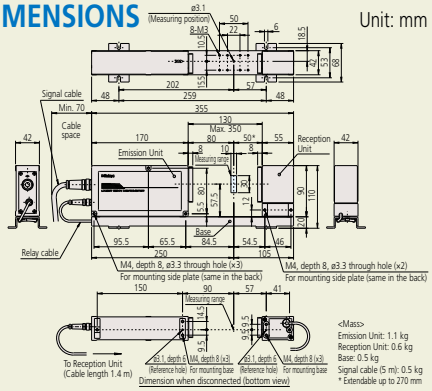

LSM-503S Measuring Unit
SERIES 544 — 0.3 mm to 30 mm Measuring Unit

• Ensures ±1.0 µm accuracy over the entire measuring range (0.3 to 30 mm).
• The industry's first narrow-range accuracy performance in this measuring range of ±(0.6+0.1ΔD) µm is available for high-accuracy measurement.



With signal cable (5 m)
02AGN770A

SPECIFICATIONS

Order No.		**544-535**	**544-536**
Model		**LSM-503S**	
Applicable laser standards		JIS	IEC, FDA
User's Manual		Japanese version	English version
Measuring range		0.3 to 30 mm	
Resolution		0.02 to 100 µm (selectable)	
Repeatability*1		±0.11 µm	
Linearity*2 (20 °C)	Whole range	±1.0 µm	
	Narrow range	±(0.6+0.1ΔD) µm*3	
Positional error*4		±1.5 µm	
Measuring region*5		10×30 mm (0.3 to 30 mm)	
Scanning rate		3200 scans/s	
Laser wavelength		650 nm (Visible)	
Laser scanning speed		226 m/s	
Operating environment	Temperature	0 to 40 °C	
	Humidity	RH 35 to 85% (non-condensing)	
Protection Level		IP64*6	

*1 Determined at the level of ±2σ (σ: standard deviation) when measuring ø30 mm at the interval of 0.32 sec. (average 1024 times).
*2 Applies at the center of the measuring range when measuring outside diameters.
*3 ΔD=Difference in diameter between the master gage and workpiece (Unit: mm)
*4 An error in outside diameter measurement due to variation in workpiece position either in the optical axis direction or in the scanning direction.
*5 The area defined by [optical axis depth]×[scanning width].
*6 The protection level provided for the interior. If the workpiece or glass of the measuring unit window is soiled by water or dust, the unit may malfunction.

Optional Accessories

• Multifunctional display unit, **LSM-6200**:

Order No.	Display type	Remarks
544-071	Japanese mm/E	Japanese user's manual
544-071*	English mm/E	English user's manual
544-072*	English mm/in	

* To denote your AC power cable add the following suffixes to the order No.: A for UL/CSA, D for CEE, DC for CCC, E for BS, F for SAA, K for KC, C and No suffix are required for PSE."

• Panel-mount type display unit, **LSM-5200**:

Order No.	Remarks
544-046	Japanese user's manual
544-047	English user's manual

• Standard calibration gage set (ø0.1, ø60.0) : **02AGD140**
• Adjustable workstage : **02AGD520**
• Air blower : **02AGD250**
• Extension signal cable (max. 25 m)

Order No.	Cable length
02AGN780A	5 m
02AGN780B	10 m
02AGN780C	15 m
02AGN780D	20 m

• Extension relay cable (max. 5 m)

02AGC150A	1 m
02AGC150B	3 m
02AGC150C	5 m

DIMENSIONS

Unit: mm

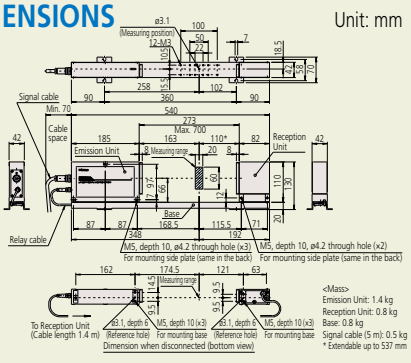

LSM-506S Measuring Unit
SERIES 544 — 1 mm to 60 mm Measuring Unit

• Ensures ±3 µm accuracy over the entire measuring range (1 to 60 mm).
• The industry's first narrow-range accuracy performance in this measuring range of ±(1.5+0.5ΔD) µm is available for high-accuracy measurement.

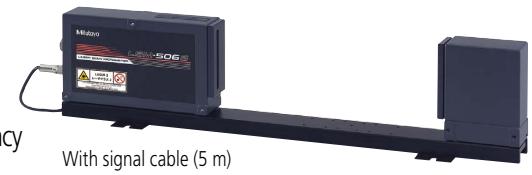

With signal cable (5 m)
02AGN770A

SPECIFICATIONS

Order No.		**544-537**	**544-538**
Model		**LSM-506S**	
Applicable laser standards		JIS	IEC, FDA
User's Manual		Japanese version	English version
Measuring range		1 to 60 mm	
Resolution		0.05 to 100 µm (selectable)	
Repeatability*1		±0.36 µm	
Linearity*2 (20 °C)	Whole range	±3 µm	
	Narrow range	±(1.5+0.5ΔD) µm*3	
Positional error*4		±4 µm	
Measuring region*5		20×60 mm (1 to 60 mm)	
Scanning rate		3200 scans/s	
Laser wavelength		650 nm (Visible)	
Laser scanning speed		452 m/s	
Operating environment	Temperature	0 to 40 °C	
	Humidity	RH 35 to 85% (non-condensing)	
Protection Level		IP64*6	

*1 Determined at the level of ±2σ (σ: standard deviation) when measuring ø60 mm at the interval of 0.32 sec. (average 1024 times).
*2 Applies at the center of the measuring range when measuring outside diameters.
*3 ΔD=Difference in diameter between the master gage and workpiece (Unit: mm)
*4 An error in outside diameter measurement due to variation in workpiece position either in the optical axis direction or in the scanning direction.
*5 The area defined by [optical axis depth]×[scanning width].
*6 The protection level provided for the interior. If the workpiece or glass of the measuring unit window is soiled by water or dust, the unit may malfunction.

Mitutoyo reserves the right to change any or all aspects of any product specification, including prices, designs and service content, without notice.

Mitutoyo

LSM-512S Measuring Unit
SERIES 544 — 1 mm to 120 mm Measuring Unit

- Ensures ±6 µm accuracy over the entire measuring range (1 to 120 mm).
- The industry's first narrow-range accuracy performance in this measuring range of ±(4.0+0.5ΔD) µm is available for high-accuracy measurement.



With signal cable (5 m)
02AGN770A

SPECIFICATIONS

Order No.		544-539	544-540
Model		LSM-512S	
Applicable laser standards		JIS	IEC, FDA
User's Manual		Japanese version	English version
Measuring range		1 to 120 mm	
Resolution		0.1 to 100 µm (selectable)	
Repeatability*1		±0.85 µm	
Linearity*2 (20 °C)	Whole range	±6 µm	
	Narrow range	±(4.0+0.5ΔD) µm*3	
Positional error*4		±8 µm	
Measuring region*5		30×120 mm (1 to 120 mm)	
Scanning rate		3200 scans/s	
Laser wavelength		650 nm (Visible)	
Laser scanning speed		904 m/s	
Operating environment	Temperature	0 to 40 °C	
	Humidity	RH 35 to 85% (non-condensing)	
Protection Level		IP64*6	

*1 Determined at the level of ±2σ (σ: standard deviation) when measuring ø120 mm at the interval of 0.32 sec. (average 1024 times).
*2 Applies at the center of the measuring range when measuring outside diameters.
*3 ΔD=Difference in diameter between the master gage and workpiece (Unit: mm)
*4 An error in outside diameter measurement due to variation in workpiece position either in the optical axis direction or in the scanning direction.
*5 The area defined by (optical axis depth)×(scanning width).
*6 The protection level provided for the interior. If the workpiece or glass of the measuring unit window is soiled by water or dust, the unit may malfunction.

LSM-516S Measuring Unit
SERIES 544 — 1 mm to 160 mm Measuring Unit

- Ensures ±7 µm accuracy over the entire measuring range (1 to 160 mm).
- The industry's first narrow-range accuracy performance in this measuring range of ±(4.0+2.0ΔD) µm is available for high-accuracy measurement.

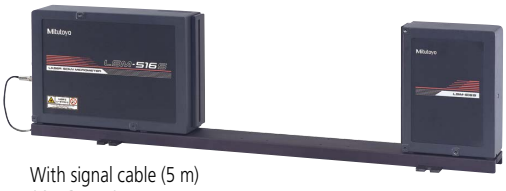

With signal cable (5 m)
02AGN770A

SPECIFICATIONS

Order No.		544-541	544-542
Model		LSM-516S	
Applicable laser standards		JIS	IEC, FDA
User's Manual		Japanese version	English version
Measuring range		1 to 160 mm	
Resolution		0.1 to 100 µm (selectable)	
Repeatability*1		±1.4 µm	
Linearity*2 (20 °C)	Whole range	±7 µm	
	Narrow range	±(4.0+2.0ΔD) µm*3	
Positional error*4		±8 µm	
Measuring region*5		40×160 mm (1 to 160 mm)	
Scanning rate		3200 scans/s	
Laser wavelength		650 nm (Visible)	
Laser scanning speed		1206 m/s	
Operating environment	Temperature	0 to 40 °C	
	Humidity	RH 35 to 85% (non-condensing)	
Protection Level		IP64*6	

*1 Determined at the level of ±2σ (σ: standard deviation) when measuring ø160 mm at the interval of 0.32 sec. (average 1024 times).
*2 Applies at the center of the measuring range when measuring outside diameters.
*3 ΔD=Difference in diameter between the master gage and workpiece (Unit: mm)
*4 An error in outside diameter measurement due to variation in workpiece position either in the optical axis direction or in the scanning direction.
*5 The area defined by (optical axis depth)×(scanning width).
*6 The protection level provided for the interior. If the workpiece or glass of the measuring unit window is soiled by water or dust, the unit may malfunction.

Optional Accessories

• Multifunctional display unit, **LSM-6200**:

Order No.	Display type	Remarks
544-071	Japanese mm/E	Japanese user's manual
544-071*	English mm/E	English user's manual
544-072*	English mm/in	

* To denote your AC power cable add the following suffixes to the order No.: A for UL/CSA, D for CEE, DC for CCC, E for BS, F for SAA, K for KC, C and No suffix are required for PSE."

• Panel-mount type display unit, **LSM-5200**:

Order No.	Remarks
544-046	Japanese user's manual
544-047	English user's manual

• Standard calibration gage set (ø20.0, ø120.0): **02AGD150**
• Air blower : **02AGD260**
• Extension signal cable (max. 25 m)

Order No.	Cable length
02AGN780A	5 m
02AGN780B	10 m
02AGN780C	15 m
02AGN780D	20 m

• Extension relay cable (max. 5 m)

02AGC150A	1 m
02AGC150B	3 m
02AGC150C	5 m

DIMENSIONS

Unit: mm

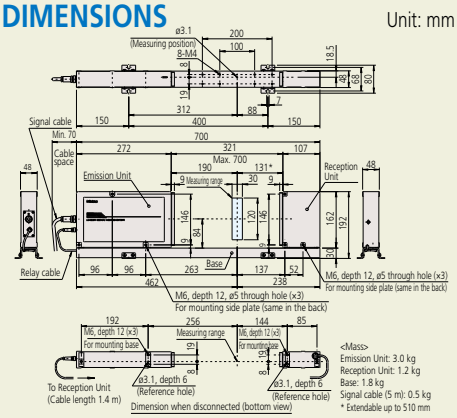

Optional Accessories

• Multifunctional display unit, **LSM-6200**:

Order No.	Display type	Remarks
544-071	Japanese mm/E	Japanese user's manual
544-071*	English mm/E	English user's manual
544-072*	English mm/in	

* To denote your AC power cable add the following suffixes to the order No.: A for UL/CSA, D for CEE, DC for CCC, E for BS, F for SAA, K for KC, C and No suffix are required for PSE."

• Panel-mount type display unit, **LSM-5200**:

Order No.	Remarks
544-046	Japanese user's manual
544-047	English user's manual

• Standard calibration gage set (ø20.0, ø160.0): **02AGM300**
• Extension signal cable (max. 25 m)

Order No.	Cable length
02AGN780A	5 m
02AGN780B	10 m
02AGN780C	15 m
02AGN780D	20 m

• Extension relay cable (max. 5 m)

02AGC150A	1 m
02AGC150B	3 m
02AGC150C	5 m

DIMENSIONS

Unit: mm

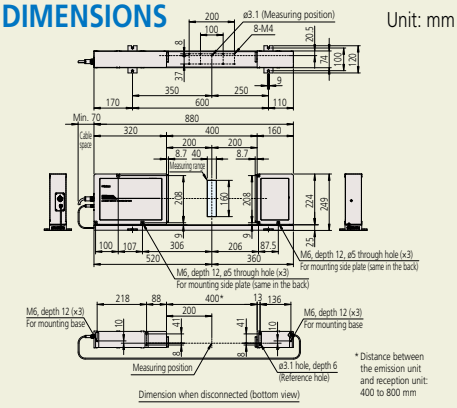

Mitutoyo reserves the right to change any or all aspects of any product specification, including prices, designs and service content, without notice.

Optional Accessories

- Standard calibration gage set (ø1.0, ø25.0) : **02AGD180**
- Workstage : **02AGD270**
- Adjustable workstage : **02AGD280**

External Dimensions

Unit: mm

Measuring Unit

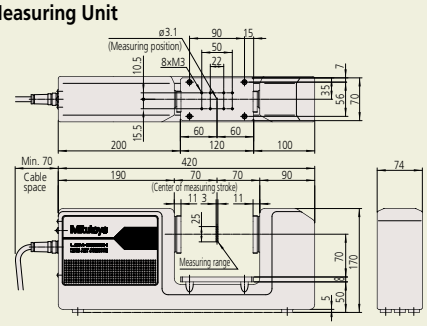

Display unit

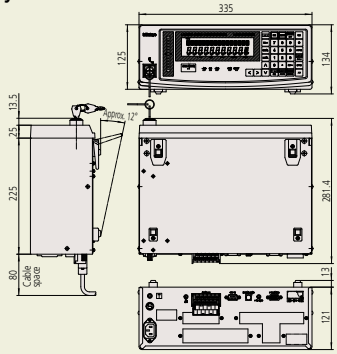

Optional Accessories

- Standard calibration gage set (ø1.0, ø60.0): **02AGD170**
- Adjustable workstage
  Horizontal stroke 200 mm : **02AGD370**
  Horizontal stroke 300 mm : **02AGD680**

DIMENSIONS

Unit: mm

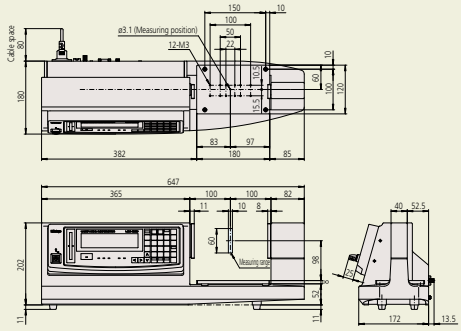

LSM-6902H Measuring Unit and 6900 Display
SERIES 544 — 0.1 mm to 25 mm High Accuracy

- Demonstrates the best repeatability available in the 25 mm class.
- The ultra-precise scanning motor enables the highest measurement accuracy to be realized.
- Thanks to excellent linearity, an accuracy of ±0.5 µm over the entire measuring range and a higher accuracy of ±(0.3+0.1ΔD) µm over a narrow range are guaranteed.
- The optimal solution for measuring the outside diameter of pin gages or plug gages.



LSM-6902H

SPECIFICATIONS

Set Order No.		544-497-1	544-498-1*6	544-499-1*6
Model		LSM-6902H		
Measuring unit				
Type		mm	mm	inch/mm
Applicable standards		JIS	IEC, FDA	
Measuring range		0.1 to 25 mm (0.004 to 1.0 in)		
Resolution		0.01 to 10 µm (selectable) (0.000001 to 0.0005 in)		
Repeatability*1	Whole range	±0.045 µm (±0.0000018 in) (ø25 mm)		
	Narrow range	±0.03 µm (±0.0000012 in) (ø10 mm)		
Linearity*2 (20 °C)	Whole range	±0.5 µm (±0.000020 in)		
	Narrow range	±(0.3+0.1ΔD) µm ±(0.000012+0.01ΔD) inch*5		
Positional error*3		±0.5 µm (±0.000020 in)		
Measuring region*4		±1.5 mm×25 mm (±0.006×1.0 in)		
Scanning rate		3200 scans/s		
Laser wavelength		650 nm (Visible)		
Laser scanning speed		226 m/s		
Operating environment	Temperature	0 to 40 °C		
	Humidity	RH 35 to 85% (non-condensing)		

*1 ±2σ values (σ being the standard deviation) for when ø25 mm and ø10 mm samples are measured for 1.28 seconds (2048 scans on average, 2 samples).
*2 The value at the center of the measuring range.
*3 An error in outside diameter measurement due to variation in workpiece position either in the optical axis direction or in the scanning direction.
*4 The region defined by [optical axis depth]×[scanning width].
*5 ΔD=Difference in diameter between the master gage and workpiece (Unit: mm).
*6 To denote your AC power cable add the following suffixes to the order No.: A for UL/CSA, D for CEE, DC for CCC, E for BS, F for SAA, K for KC, C and No suffix are required for PSE.

Display unit

Display	16-digit plus 11-digit fluorescent display, and guide message LED
Segment	1 to 7 (1 to 3, transparent) or 1 to 255 edges
Averaging times	Arithmetic average: 2 to 2048 scans. Moving average: 32 to 2048 scans.
Judgment	Selection from "target value + tolerance", "lower tolerance + upper tolerance", or "7 classes multilimit tolerance zone".
Measurement mode	Standby, Single measurement, Continuous measurement
External dimensions	335 (W) ×134 (H) ×250 (D) mm
Power supply	100 to 240 VAC ±10% 30 W 50/60 Hz
Standard I/F	RS-232C, Analog I/O
Optional I/F	Digimatic code output unit (2-ch), 2nd I/O analog I/F, BCD I/F
Operating environment	0 to 40 °C, RH 35 to 85% (non-condensing)
Others	Nominal setting, sample setting, suppression of unnecessary digits, transparent object measurement, automatic measurement in edge mode, output timer, abnormal data elimination, SHL change, group judgment, simultaneous measurement, statistical processing, mastering, buzzer function, automatic workpiece detection (dimension/position), zero-set/offset Note: In the case of dual measuring-unit connection, extra-fine line measurement and some of the communication commands are not available

LSM-9506 Integrated Display/Measuring Unit
SERIES 544 — 0.5 mm to 60 mm High Accuracy

- High accuracy of ±2.5 µm, integrated display unit with many functions equivalent to the multi-function display unit. (Some functions may be unavailable.)



SPECIFICATIONS

Order No.		544-115*5	544-116*6
Model		LSM-9506	
Type		mm	inch/mm
Measuring range		0.5 to 60 mm	0.02 to 2.36 in/0.5 to 60 mm
Resolution		0.05 to 100 µm (selectable)	0.000002 to 0.005 in/0.00005 to 0.1 mm
Repeatability*1		±0.6 µm (±0.00003 in)	
Linearity*2 (20 °C)		±2.5 µm (±0.0001 in)	
Positional error*3	Optical axis direction	±2.5 µm (±0.0001 in)	
	Scanning direction	± (2.0+L/10) µm L: Displacement between workpiece center and optical axis center	
Measuring region*3		±5×60 mm (±0.2×2.36 in)	
Scanning rate		1600 scans/s	
Laser wavelength		650 nm (Visible)*4	
Laser scanning speed		226 m/s (8900 in/s)	
Display unit		16-digit dot matrix (upper column) +7 segment 11-digit (lower column), guidance LEDs	
Standard interface		RS-232C, Digimatic code output unit (1-ch)	
Optional interface		No	
Power supply		AC100 V to 240 V±10%, 25 W, 50/60 Hz	
Operating environment		0 to 40 °C, RH 35 to 85% (non-condensing)	

*1 Determined at the level of ±2σ (σ: standard deviation) when measuring ø60 mm in the interval of 0.32 sec. (average 512 times).
*2 Applies at the center of the measuring range when measuring outside diameters.
*3 An error in outside diameter measurement due to variation in workpiece position either in the optical axis direction or in the scanning direction.
*4 FDA Class II (**544-116-1A**)/IEC Class 2 (All models except **544-116-1A**) semiconductor laser for scanning (Maximum power: 1.0 mW)
*5 To denote your AC power cable add the following suffixes to the order No.: D for CEE, DC for CCC, E for BS, F for SAA, K for KC, C and No suffix are required for PSE.
*6 To denote your AC power cable add the following suffixes to the order No.: A for UL/CSA, D for CEE, DC for CCC, E for BS, K for KC and No suffix are required for PSE.

Mitutoyo reserves the right to change any or all aspects of any product specification, including prices, designs and service content, without notice.

LSM-5200 Display Unit
SERIES 544 — Panel-mount Type



- A compact controller which could be used for multi-unit system configurations.
- A panel-mount type display unit designed for the **LSM-S** Series.
- Analog I/O and RS-232C is standard.

SPECIFICATIONS

Order No.	**544-047**
Model	**LSM-5200**
Display	9-digit (upper) and 8-digit (lower) 7-segment
Segment	1 to 7 (1 to 3, transparent) or 1 to 255 edges*1
Averaging method	Arithmetic average: from 4 to 2048; Moving average: from 32 to 2048 (Arithmetic average is from 16 to 2048 when using **LSM-500S**.)
Judgment	Selecting from "target value±tolerance value" or "lower limit/upper limit".
Measurement mode	Standby, Single measurement, Continuous measurement
Statistical analysis	Calculation result is output via USB or RS-232C.
External dimensions	144 (W) ×72 (H) ×197.1 (D) mm
Power supply	24 V DC±10%, 1.3 A or more
Standard I/F	USB2.0, RS-232C, I/O analog
Operating temperature (humidity) ranges	0 to 40 °C, RH 35 to 85% (non-condensing)
Storage temperature (humidity) ranges	–20 to 70 °C, RH 35 to 85% (non-condensing)
Other functions	Measurement of odd fluted parts, simultaneous measurement, nominal setting, sample setting, selection of unnecessary digits, transparent object measurement*2 Automatic workpiece detection (dimension/position detected)*1, abnormal data elimination, mastering, statistical processing (when using USB, RS-232C), output timer, automatic measurement in edge mode, presetting Note that every function is limited in its combination possibilities. See the user manual for details.
Mass	1.4 kg

*1 The measuring range will be 0.1 mm to 2 mm in the 1 to 255 edge measurement mode or when activating the automatic workpiece detection with **544-531**, **544-532**. Each function has its combination limit.
*2 The measuring range is 50 µm to 2 mm when using **544-531**, **544-532**. For smaller ranges, contact your local Mitutoyo sales office.
Note 1: Cannot be connected to **544-495**, **544-496**.
Note 2: Previous models such as **544-451** cannot be connected.
Note 3: For USB communication with a PC, a dedicated device driver is required. For details, contact your local Mitutoyo sales office.

DIMENSIONS

Unit: mm

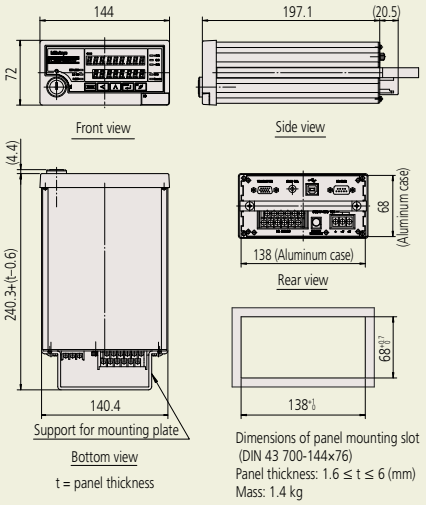

LSM-6200 Display Unit
SERIES 544 — Multi-function Type



- 2-axis display unit enables 2 items be displayed simultaneously.
- Statistical operation is supported.
- Capable of statistical analysis such as: average, maximum value, minimum value, range (max. to min.).
- Segment measurement (7 points) or edge measurement (1 to 255 edges) can be selected.
- A function to eliminate abnormal values is standard.
- 100 tolerance values, preset values, or settings can be stored.

SPECIFICATIONS

Order No.	**544-071**	**544-072**
Model	**LSM-6200**	
Type	mm	inch/mm
Display	16-digit dot matrix (upper) and 11-digit 7-segment (lower)	
Segment	1 to 7 (1 to 3, transparent) or 1 to 255 edges*1	
Averaging times	Arithmetic average: per 2 to 2048/Moving average: per 32 to 2048 (Arithmetic average is per 16 to 2048 when using **544-531**, **544-532**)	
Judgment	Selection from "target value+tolerance", "lower tolerance + upper tolerance", or "7 classes multi-limit tolerance zone".	
Measurement mode	Standby, Single measurement, Continuous measurement	
Statistical analysis	Maximum, Minimum, Average, Dispersion, σ (S.D)	
Size	335 (W) ×134 (H) ×250 (D) mm	
Power supply	100 to 240 V AC ±10%, 45 W, 50/60 Hz	
Standard I/F	RS-232C, Analog I/O	
Optional I/F	Digimatic code output unit (2-ch), 2nd I/O analog I/F, BCD I/F	
Operating environment	0 to +40 °C, RH 35 to 85% (non-condensing)	
Other functions	Nominal setting, sample setting, selection of unnecessary digits, transparent object measurement*2, measurement of odd fluted parts, automatic measurement in edge mode, output timer, abnormal data elimination, SHL change, group judgment, simultaneous measurement, statistical processing, mastering, buzzer function, automatic workpiece detection (dimension/position)*1, zero-set/offset, dual measurement (optional)	

*1 The measuring range will be 0.1 mm to 2 mm in the 1 to 255 edge measurement mode or when activating automatic workpiece detection with **544-531**, **544-532**. Each function has its combination limit.
*2 The measuring range is 50 µm to 2 mm when using **544-531**, **544-532**. For smaller ranges, contact your local Mitutoyo sales office.
Note 1: To denote your AC power cable add the following suffixes to the order No.: A for UL/CSA, D for CEE, DC for CCC, E for BS, F for SAA, K for KC, C and No suffix are required for PSE.
Note 2: Cannot be connected to **544-495**, **544-496**.
Note 3: Previous models such as **544-451** cannot be connected.

DIMENSIONS

Unit: mm

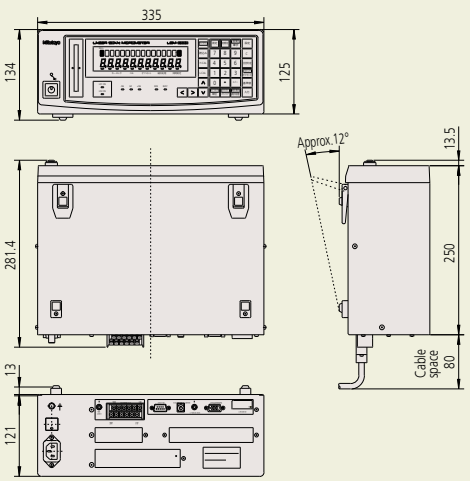

Mitutoyo reserves the right to change any or all aspects of any product specification, including prices, designs and service content, without notice.

Optional Accessories
SERIES 544 — Laser Scan Micrometer (Measuring Unit)

Standard calibration gage set

- Standard gage set suitable for calibration of Laser Scan Micrometers.
- Nominal gage diameters (1 to 160 mm) are as given in Specifications.



SPECIFICATIONS

For calibrating models		LSM-6902H	LSM-500S	LSM-501S	LSM-503S	LSM-506S	LSM-512S	LSM-516S	LSM-9506
Set No.		02AGD180	02AGD110	02AGD120	02AGD130	02AGD140	02AGD150	02AGM300	02AGD170
Configuration (Order No.)	Stand	02AGD181	02AGD111	02AGD121	02AGD131	02AGD141	02AGD151	02AGM320	02AGD171
	Gages	ø1: 02AGD920 ø25: 02AGD963	ø0.1: 958200 ø2 : 958202	ø0.1: 958200 ø10: 229317	ø1: 02AGD920 ø30: 02AGD961	ø1: 02AGD920 ø60: 02AGD962	ø20: 229730 ø120: 234072	ø20: 229730 ø160: 02AGM303	ø1: 02AGD920 ø60: 02AGD962
	Carrying case	02AGD190	958203	958203	02AGD980	02AGD980	02AGD990	02AGM310	02AGD970

Workstage

- Easy set-up and height adjustment enables high-precision measurement.



SPECIFICATIONS

Model	LSM-501S LSM-503S LSM-6902H
Order No.	02AGD270

Adjustable workstage

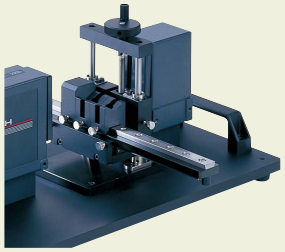

- Vertical/horizontal slide mechanism enables easy measurement of various workpiece diameters.
- Suitable for quality control of high-precision shafts, rollers, pin gages and similar.

Measurement Examples

- Roller of copying machine

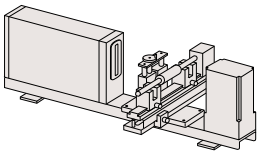

- Pin gage or plug gage

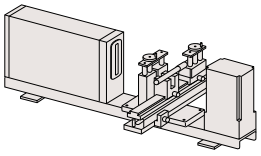

Basic configuration

Basic set	Order No.	Model	Standard Accessories	Measuring range (mm)	Horizontal stroke (mm)	Vertical stroke (mm)
1) Main unit 2) V-block 3) Stop	02AGD280	LSM-6902H	V-block (**02AGD420**), 2 pcs. Stopper (**02AGD430**), 1 pc.	0.1 - 25	130	47
	02AGD400	LSM-501S		0.05 - 10	130	32
	02AGD490	LSM-503S		0.3 - 30	200	35
	02AGD520	LSM-506S*	V-block A (**02AGD550**), 2 pcs.	1 - 60	300	45
	02AGD370	LSM-9506*	V-block B (**02AGD560**), 1 pc.	0.5 - 60	200	45
	02AGD680		V-block C (**02AGD570**), 1 pc.	0.5 - 60	300	45

* The stop is not included in the basic set for these models.
Note: Optional part for the adjustable workstage, such as center support, adjustable V-block (up/down) etc., are available.

Guide pulley

- Used for supporting measurement of outside diameter of fine wirelike materials such as magnetic wire or fiber.

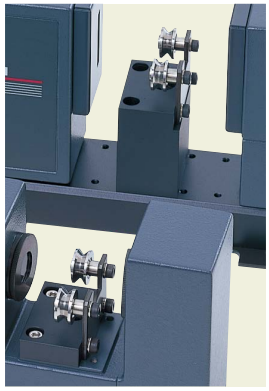

SPECIFICATIONS

Model	LSM-500S	LSM-501S
Order No.	02AGD200	02AGD210

Note 1: Each measurement range is as follows:
LSM-500S: ø5 µm to ø1.6 mm
LSM-501S: ø50 µm to ø2 mm

Note 2: For calibration, the calibration gage set for **LSM-500S** (**02AGD110**) is required.

Mitutoyo reserves the right to change any or all aspects of any product specification, including prices, designs and service content, without notice.

Optional Accessories
SERIES 544 — Laser Scan Micrometer (Measuring Unit)

Air shield

- Air blows from the air outlet installed on the laser section to clear dust adhering to the laser window.

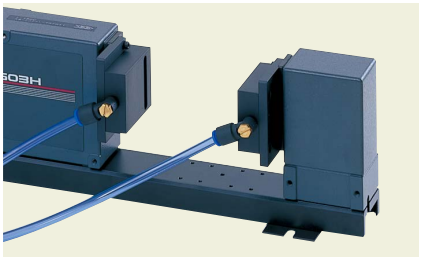

SPECIFICATIONS

Air supply unit	Air shield	Applicable models
957608	**02AGD220**	**LSM-500S (544-531, 544-532)**
	02AGD230	**LSM-501S (544-533, 544-534)**
	02AGD240	**LSM-503S (544-535, 544-536)**
	02AGD250	**LSM-506S (544-537, 544-538)**
	02AGD260	**LSM-512S (544-539, 544-540)**

Note: Air shield is supplied with 5 m air tube (Outside Diameter: 6 mm).

Extension signal cable / Extension relay cable

- Extension signal cables are necessary when the measuring unit and display unit are separated in operation; Extension relay cables are necessary when the optical section is separated in operation.

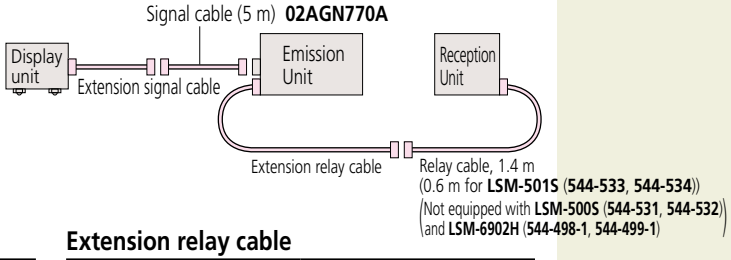

SPECIFICATIONS

Extension signal cable

Order No.	Cable length
02AGN780A	5 m
02AGN780B	10 m
02AGN780C	15 m
02AGN780D	20 m

Extension relay cable

Order No.	Cable length
02AGC150A	1 m
02AGC150B	3 m
02AGC150C	5 m

Note 1: For **544-531**, **544-532**, **544-533**, **544-534**, the overall length of the signal cable and the extension signal cable is 20 m at a maximum.
Note 2: For **544-535**, **544-536**, **544-537**, **544-538**, **544-539**, **544-540**, **544-541**, **544-542** the overall length of the signal cable and the extension signal cable is 30 m at a maximum.
Note 3: The length of the relay extension cable is 5 m at a maximum.
Note 4: The maximum extension length of the signal cable and relay cable is 32 m in total.
Note 5: Cannot be used with **544-498-1** and **544-499-1**.

Optional Accessories
SERIES 544 — Laser Scan Micrometer (Display Unit)

Foot switch

- For **LSM-6200** (**544-071**, **544-072**), **LSM-6902H** (**544-498-1**, **544-499-1**) and **LSM-9506** (**544-115**, **544-116**).



937179T

Optional Accessories
Interface for LSM6200, 6902H

BCD Interface

- Outputs measurement data in BCD output (7-digit) or HEX output.
- Data logic can be switched.
- Isolated I/O circuitry
- Available for **LSM-6200** (**544-071**, **544-072**) and **LSM-6902H** (**544-498-1**, **544-499-1**).

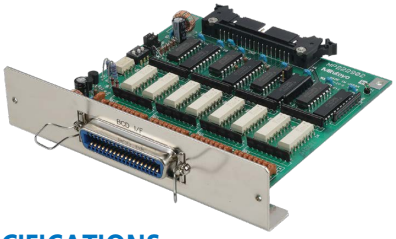

SPECIFICATIONS

Order No.	**02AGC910**
Standard Accessories	Connector (DDK) **57-30360** (**214188**)

Mitutoyo reserves the right to change any or all aspects of any product specification, including prices, designs and service content, without notice.

Optional Accessories
SERIES 544 — Laser Scan Micrometer (Display Unit)

Digimatic code output unit

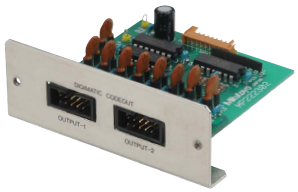

- 2-channel Digimatic code output
- In simultaneous measurement, measurement data are output as follows:
  Program No. 0 to No. 4 in OUTPUT-1
  Program No. 5 to No. 9 in OUTPUT-2
  (10 programs operated)
- 10 pin MIL type connector.
- Output cable is not supplied.
  Connecting cable (optional) 1 m (**936937**)
- Available for **LSM-6200** (**544-071**, **544-072**) and **LSM-6902H** (**544-498-1**, **544-499-1**).

Note 1: Output is 6 digits of measurement data.
Note 2: Displaying 6th and 7th digit after the decimal point is not supported.

SPECIFICATIONS

Order No.	**02AGC840**

Dual connection unit

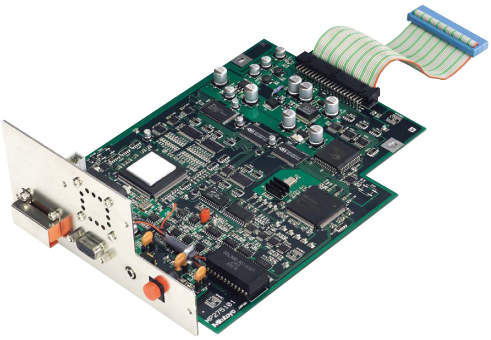

- Enables second unit connection to **LSM-6200** (**544-071**, **544-072**). (both units must be the same model)

Note: Cannot be used for **LSM-6902H** (**544-498-1**, **544-499-1**).

- Depending on the layout of the two measuring units, large-diameter measurement, XY measurement, and parallel measurement are possible.
- Both of the measuring units and display units can be simultaneously operated.

SPECIFICATIONS

Order No.	**02AGP150**

XY Measurement

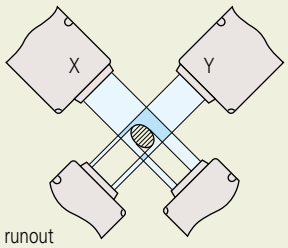

(X–Y): runout
(X+Y)/2: average
Note: XY requires 10 mm-interval.

2nd I/O analog I/F

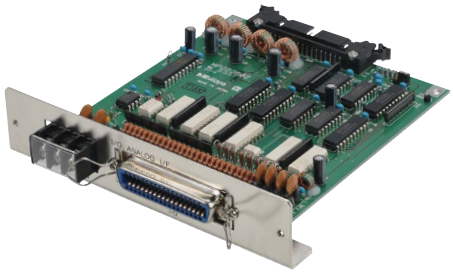

- I/O, analog output.
- Simultaneous measurement is supported by two pairs of GO/NG judgment outputs.
- Available for **LSM-6200** (**544-071**, **544-072**) and **LSM-6902H** (**544-498-1**, **544-499-1**).

SPECIFICATIONS

Order No.	**02AGC880**
Standard Accessories	Connector (DDK) **57-30360** (**214188**)

Parallel Measurement

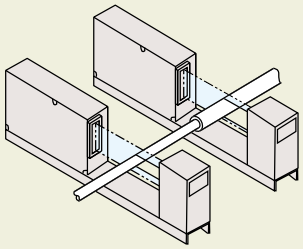

Cable for BCD and 2nd I/O simultaneous mount

- Both BCD (**02AGC910**) and 2nd I/O analog I/F (**02AGC880**) can be mounted on **LSM-6200** (**544-071**, **544-072**) and **LSM-6902H** (**544-498-1**, **544-499-1**) using this cable.

Note: If using this cable, the dual connection unit (**02AGP150**) cannot be used.

SPECIFICATIONS

Order No.	**02AGE060**

DIMENSIONS

Unit: mm

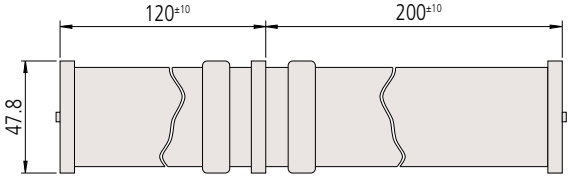

Mitutoyo reserves the right to change any or all aspects of any product specification, including prices, designs and service content, without notice.

Laser Scan Micrometers

Compatibility

Your Laser Scan Micrometer has been adjusted together with the ID Unit, which is supplied with the measuring unit. The ID Unit, which has the same code number and the same serial number as the measuring unit, must be installed in the display unit. This means that if the ID Unit is replaced the measuring unit can be connected to another corresponding display unit.

The workpiece and measuring conditions

Depending on whether the laser is visible or invisible, the workpiece shape, and the surface roughness, measurement errors may result. If this is the case, perform calibration with a master workpiece which has dimensions, shape, and surface roughness similar to the actual workpiece to be measured.
If measurement values show a large degree of dispersion due to the measuring conditions, increase the number of scans for averaging to improve the measurement accuracy.

Electrical interference

To avoid operational errors, do not route the signal cable and relay cable of the Laser Scan Micrometer alongside a high voltage line or other cables capable of inducing noise current in nearby conductors. Ground all appropriate units and cable shields.

Connection to a computer

If the Laser Scan Micrometer is to be connected to an external personal computer via the RS-232C interface, ensure that the cable connections conform to the specification.

Laser safety

Mitutoyo Laser Scan Micrometers use a low-power visible laser for measurement. The laser is a CLASS 2 EN/IEC60825-1 device.
Warning and explanation labels, as shown below, are attached to the Laser Scan Micrometers as is appropriate.



Re-assembly after removal from the base

Observe the following limits when re-assembling the emission unit and reception unit to minimize measurement errors due to misalignment of the laser's optical axis with the reception unit.

• Alignment within the horizontal plane

a. Parallel deviation between reference lines C and D:
X (in the transverse direction)

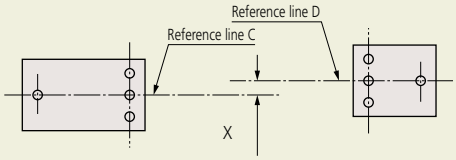

b. Angle between reference lines C and D: θx (angle)

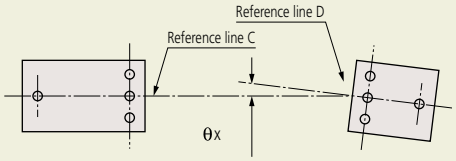

• Alignment within the vertical plane

c. Parallel deviation between reference planes A and B: Y (in height)

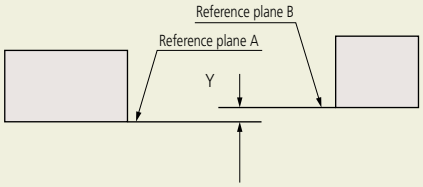

d. Angle between reference planes A and B: θy (angle)

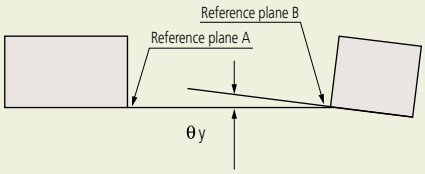

• Allowable limits of optical axis misalignment

Model	Distance between Emission Unit and Reception Unit	X and Y	θx and θy
LSM-501S	68 mm (2.68 in) or less	within 0.5 mm (0.02 in)	within 0.4° (7 mrad)
	100 mm (3.94 in) or less	within 0.5 mm (0.02 in)	within 0.3° (5.2 mrad)
LSM-503S	130 mm (5.12 in) or less	within 1 mm (0.04 in)	within 0.4° (7 mrad)
	350 mm (13.78 in) or less	within 1 mm (0.04 in)	within 0.16° (2.8 mrad)
LSM-506S	273 mm (10.75 in) or less	within 1 mm (0.04 in)	within 0.2° (3.5 mrad)
	700 mm (27.56 in) or less	within 1 mm (0.04 in)	within 0.08° (1.4 mrad)
LSM-512S	321 mm (12.64 in) or less	within 1 mm (0.04 in)	within 0.18° (3.1 mrad)
	700 mm (27.56 in) or less	within 1 mm (0.04 in)	within 0.08° (1.4 mrad)
LSM-516S	800 mm (31.50 in) or less	within 1 mm (0.04 in)	within 0.09° (1.6 mrad)

Measurement Examples

Measurement of outside diameter of rubber roll

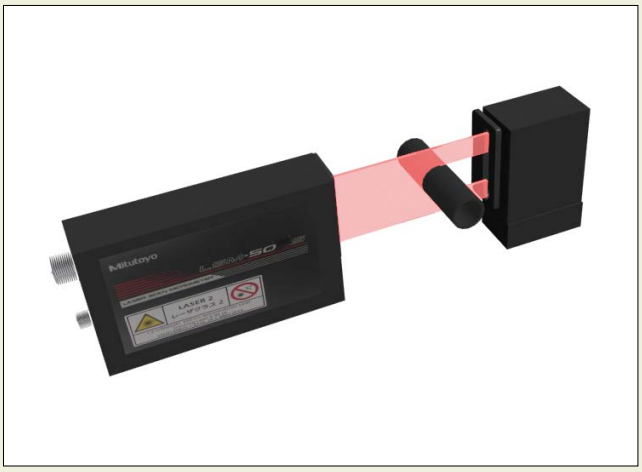

Simultaneous measurement of roller outside diameter and deflection

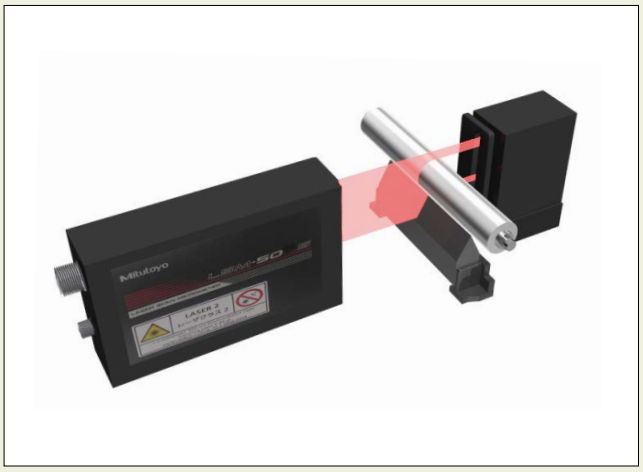

Measurement of uneven thickness of film or sheet (simultaneous measurement)

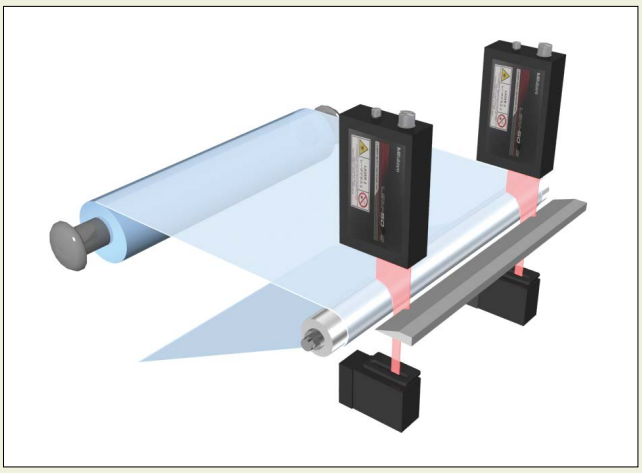

Measurement of gap between rollers



Measurement of film sheet thickness

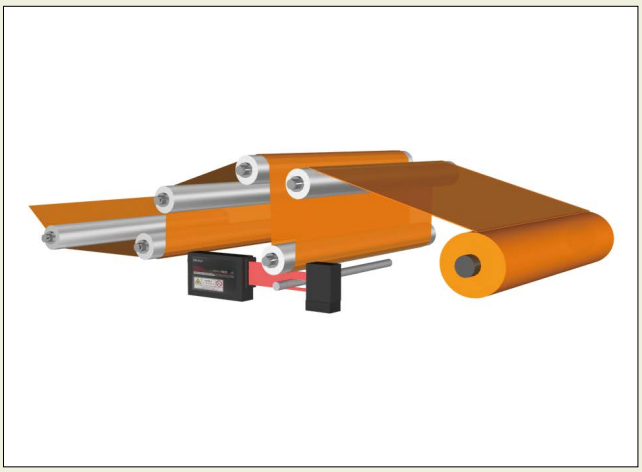

Dual system for measuring a large outside diameter

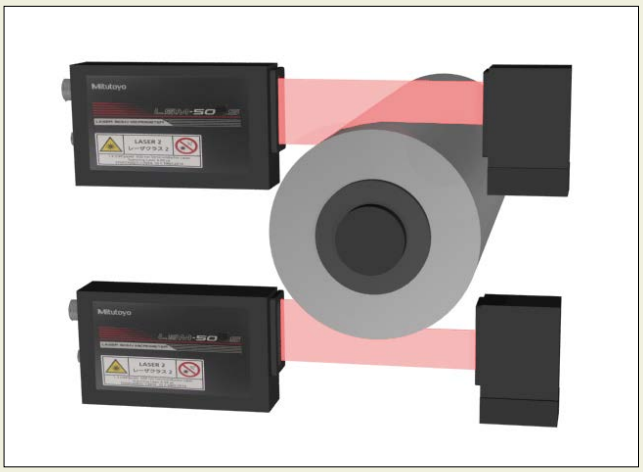



ABS AT1300 Series

Assembly Type Scale Unit for Absolute Systems ABS AT1300 Series

Refer to page H-11 for details.



ABS AT1100 Series

Assembly Type Scale Unit for Absolute Systems ABS AT1100 Series

Refer to page H-12 for details.

H

Digimatic Scale Units Linear Scales

IP66 IP67

IP Codes

These are codes that indicate the degree of protection provided (by an enclosure) for the electrical function of a product against the ingress of foreign bodies, dust and water as defined in IEC standards (IEC 60529: 2001) and JIS C 0920: 2003.
(Refer to page IX)



Measuring Instruments Shipped with Inspection Certificate

Mitutoyo guarantees product quality as a leading precision measuring instrument manufacturer and ships measuring instruments with an inspection certificate that includes inspection data so that customers can use them with confidence.

ABSOLUTE™

ABSOLUTE Linear Encoder

Mitutoyo developed the unique absolute method to retain position information after the power is turned off.
The origin is set once - thereafter the live position is displayed when the power is turned on.

INDEX

ABSOLUTE Digimatic Scale Units

SD Horizontal and Vertical H-3

Linear Scales

Linear Scale System Diagram H-7
AT103 Standard Spar Type H-8
AT113 Slim Spar Type H-9
AT211-A, **AT211-B** Slim Spar, High Speed H-10
ABS AT1300 High Accuracy, Robust Type H-11
ABS AT1100 Coolant/Dust-proof Type H-12
ABS AT715 Slim Spar Type H-13
Counter (**KA-200**) H-14
Linear Scale Counter H-15
ST36 High Accuracy/Resolution Type H-16
ST46-EZA Compact, Glass/Metal-tape Types H-17
ABS ST700 Contamination Resistant, 6 m max. H-18
ABS ST1300 Ultra-high Resolution, 12 m max. H-19
PSU-200/251/252 Interpolation Units H-20
Quick Guide to Precision Measuring Instruments H-21

Mitutoyo

SD ABSOLUTE Digimatic Scale Units
SERIES 572



Horizontal single-function type (Water-proof type)
572-602 SD-20G



Horizontal single-function type
572-202-30 SD-20AX
572-203-10 SD-30D



Horizontal multi-function type
572-461 SD-15E



Vertical single-function type
572-303-10 SDV-30D

Vertical multi-function type
572-561 SDV-15E

IP66 ABSOLUTE™

Applicable models: **SD-G**

- **SD** Series facilitates mounting on jigs, tools, and small machine tools to enable accurate positioning.
- Built-in absolute scale including the ABS point does not require a zero-set every time the power is turned on. In addition, reliability has improved thanks to elimination of overspeed errors.
- Horizontal or vertical display according to the scale mounting direction.
- The dust resistance and the environmental resistance of the display has improved. The **SD-G** Series offers dust/water protection level IP66.
- Long battery life.
- **EC** counters are available as external display units.
- Equipped with an output port to transfer measurement data, allowing implementation in control systems and gaging systems.

Functions

- ABS (Absolute) measurement function
- INC (Incremental) measurement function
- Zero-setting function
- Presetting function (2 preset values can be set. Not available for **SD-G**, **SD-AX**, **SD-D**, **SDV-D**)
- Double reading function (Available only for **SD-F** or **SDV-F**)
- Direction switch function (Available only for **SD-E**, **SDV-E**)
- Hold function*
- Measurement value composition error alarm
- Low battery alarm
- Output function

* To activate the hold function when using **SD-AX**, **SD-D** or **SDV-D** models, an optional hold unit is required. Simultaneous activation with the output function is not available.

Note: These units use 1.5 V silver oxide cells for the power supply. Therefore, when the units are directly fixed to the frame of a machine tool that requires a high voltage, malfunctions such as display digit fluctuations and errors may occur. Countermeasure examples are described in the user manuals provided.

Typical applications

Machine table position

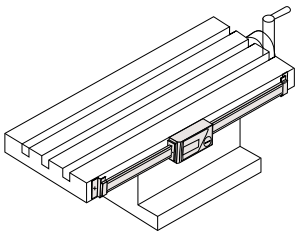

Drilling machine stroke position

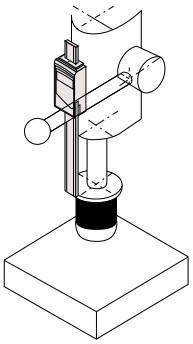

Focus setting on optical instruments

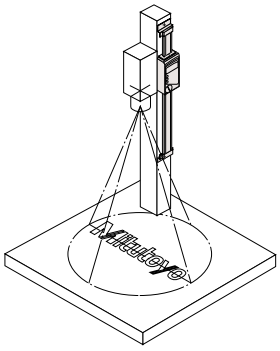

Special applications

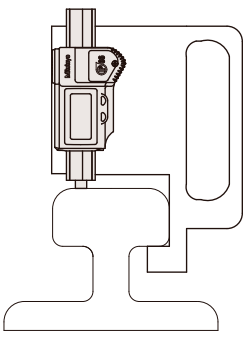

As a measurement jig for outdoor use (**SD-G**)

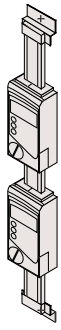

Detector head mechanism

Please contact Mitutoyo for special applications.

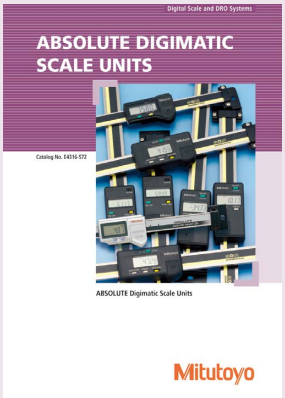

Refer to the ABSOLUTE DIGIMATIC SCALE UNITS Brochure (**E4316**) for more details.

Mitutoyo reserves the right to change any or all aspects of any product specification, including prices, designs and service content, without notice.

System Diagram

[Scale units]

Single-function type with high dust/water resistance

SD-G (Horizontal)



*2

Single-function type

SD-AX (Horizontal)



Note 1: **SD-30D** for the measuring range of 300 mm.

SDV-D (Vertical)



Multi-function type

SD-E (Horizontal)



SDV-E (Vertical)



Multi-function type

SD-F (Horizontal)



SDV-F (Vertical)



[Display units]

EC Counter*3



Refer to page G-11 for details.

Tolerance judgment output*1

*3

Digimatic mini-processor
DP-1VA LOGGER
264-505



Palm-sized printer for printing and statistical analysis

*3

Multiplexer
MUX-10F
264-002



Interface unit for the **RS-232C** conversion and output **RS-232C** output

RS-232C output

USB Input Tool Direct
USB-ITN-D
06AFM380D



An interface that easily transfers data to widely used software such as Excel. Slim, with integrated cable.

USB keyboard signal conversion

*3

Input Tool (USB keyboard signal conversion model)
IT-020U
264-020



USB Interface unit that converts and transfers data into spreadsheets

USB keyboard signal conversion

Note 2: May also be connected to an RS-232C conversion type (**IT-007R**) input tool.

USB Input Tool Direct
USB-ITN-A **06AFM380A**
USB-ITN-C **06AFM380C**
USB-ITN-F **06AFM380F**

USB keyboard signal conversion

Measurement Data Wireless Communication System
U-WAVE
The data output from the **SD** Series can be sent to the computer by wireless communication without using the **EC** counter. Refer to pages A-9 to A-14 for details.

USB keyboard signal conversion

Connecting cable with the water-proof type output switch*2 1 m: **05CZA624** 2 m: **05CZA625**

Connecting cable with the output switch 1 m: **959149** 2 m: **959150**

Connecting cable with the output switch

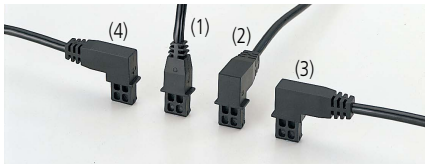

(1) 1 m: **905338** 2 m: **905409**
(2) 1 m: **905689** 2 m: **905690**
(3) 1 m: **905691** 2 m: **905692**
(4) 1 m: **905693** 2 m: **905694**

Connecting cable 1 m: **936937** 2 m: **965014**

*1 Select the tolerance judgment output or Digimatic output when setting the parameters.
*2 Connecting cable with the water-proof type output switch can be used only for **SD-G** or Water-proof Digital Caliper equipped with the external output function.
*3 Connecting of **SD** Series and **DP-1VA LOGGER**/**MUX-10F**/**IT-020U** is also available without passing through the **EC** counter. In this case, connect these units and **SD** Series with the cables used for connection with the **EC** counter.

H

Mitutoyo reserves the right to change any or all aspects of any product specification, including prices, designs and service content, without notice.

ABSOLUTE Digimatic Scale Units
SERIES 572
SPECIFICATIONS

Type	Unit spec.	Order No.	Model	Range	Resolution	Accuracy	Repeatability	Response speed*2	Battery life
Horizontal single-function type (Water-proof type)	Metric	572-600	SD-10G	100 mm	0.01 mm	0.03 mm	0.01 mm	Unlimited	Approx. 13,000 hours
		572-601	SD-15G	150 mm					
		572-602	SD-20G	200 mm					
	Metric/Inch	572-613	SD-4" /10G	100 mm/4 in	0.0005 in/0.01 mm	0.03 mm/0.001 in	0.01 mm/0.0005 in		
		572-614	SD-6" /15G	150 mm/6 in					
		572-615	SD-8" /20G	200 mm/8 in					
Horizontal single-function type	Metric	572-200-30	SD-10AX	100 mm	0.01 mm	0.03 mm	0.01 mm		Approx. 18,000 hours
		572-201-30	SD-15AX	150 mm					
		572-202-30	SD-20AX	200 mm					
		572-203-10	SD-30D	300 mm		0.04 mm			Approx. 20,000 hours
	Metric/Inch	572-210-30	SD-4" AX	100 mm/4 in	0.0005 in/0.01 mm	0.03 mm/0.001 in	0.01 mm/0.0005 in		Approx. 18,000 hours
		572-211-30	SD-6" AX	150 mm/6 in					
		572-212-30	SD-8" AX	200 mm/8 in					
		572-213-10	SD-12" D	300 mm/12 in		0.04 mm/0.002 in			Approx. 20,000 hours
Horizontal multi-function type	Metric	572-460	SD-10E	100 mm	0.01 mm	0.03 mm	0.01 mm		Approx. 5,000 hours
		572-461	SD-15E	150 mm					
		572-462	SD-20E	200 mm					
		572-463	SD-30E	300 mm		0.04 mm			
		572-464	SD-45E	450 mm					
		572-465	SD-60E	600 mm		0.05 mm			
		572-466	SD-80E	800 mm		0.06 mm			
		572-467	SD-100E	1000 mm		0.07 mm			
	Metric/Inch	572-470	SD-4" E	100 mm/4 in	0.0005 in/0.01 mm	0.03 mm/0.001 in	0.01 mm/0.0005 in		
		572-471	SD-6" E	150 mm/6 in					
		572-472	SD-8" E	200 mm/8 in					
		572-473	SD-12" E	300 mm/12 in		0.04 mm/0.002 in			
		572-474	SD-18" E	450 mm/18 in					
		572-475	SD-24" E	600 mm/24 in		0.05 mm/0.002 in			
		572-476	SD-32" E	800 mm/32 in		0.06 mm/0.0025 in			
		572-477	SD-40" E	1000 mm/40 in		0.07 mm/0.003 in			
Horizontal multi-function type (equipped with double reading function)	Metric	572-480-10*1	SD-10F	100 mm	0.01 mm	0.03 mm	0.01 mm (Radius indication, not diameter)		Approx. 5,000 hours
		572-481-10*1	SD-15F	150 mm					
		572-482-10*1	SD-20F	200 mm					
		572-483-10*1	SD-30F	300 mm		0.04 mm			
		572-484-10*1	SD-45F	450 mm					
		572-485-10*1	SD-60F	600 mm		0.05 mm			
		572-486-10*1	SD-80F	800 mm		0.06 mm			
		572-487-10*1	SD-100F	1000 mm		0.07 mm			
	Metric/Inch	572-490-10*1	SD-4" F	100 mm/4 in	0.0005 in/0.01 mm	0.03 mm/0.001 in	0.01 mm/0.0005 in (Radius indication, not diameter)		
		572-491-10*1	SD-6" F	150 mm/6 in					
		572-492-10*1	SD-8" F	200 mm/8 in					
		572-493-10*1	SD-12" F	300 mm/12 in		0.04 mm/0.002 in			
		572-494-10*1	SD-18" F	450 mm/18 in					
		572-495-10*1	SD-24" F	600 mm/24 in		0.05 mm/0.002 in			
		572-496-10*1	SD-32" F	800 mm/32 in		0.06 mm/0.0025 in			
		572-497-10*1	SD-40" F	1000 mm/40 in		0.07 mm/0.003 in			
Vertical single-function type	Metric	572-300-10	SDV-10D	100 mm	0.01 mm	0.03 mm	0.01 mm		Approx. 20,000 hours
		572-301-10	SDV-15D	150 mm					
		572-302-10	SDV-20D	200 mm					
		572-303-10	SDV-30D	300 mm		0.04 mm			
	Metric/Inch	572-310-10	SD-4" D	100 mm/4 in	0.0005 in/0.01 mm	0.03 mm/0.001 in	0.01 mm/0.0005 in		
		572-311-10	SD-6" D	150 mm/6 in					
		572-312-10	SD-8" D	200 mm/8 in					
		572-313-10	SD-12" D	300 mm/12 in		0.04 mm/0.002 in			
Vertical multi-function type	Metric	572-560	SDV-10E	100 mm	0.01 mm	0.03 mm	0.01 mm		Approx. 5,000 hours
		572-561	SDV-15E	150 mm					
		572-562	SDV-20E	200 mm					
		572-563	SDV-30E	300 mm		0.04 mm			
		572-564	SDV-45E	450 mm					
		572-565	SDV-60E	600 mm		0.05 mm			
		572-566	SDV-80E	800 mm		0.06 mm			
		572-567	SDV-100E	1000 mm		0.07 mm			
	Metric/Inch	572-570	SDV-4" E	100 mm/4 in	0.0005 in/0.01 mm	0.03 mm/0.001 in	0.01 mm/0.0005 in		
		572-571	SDV-6" E	150 mm/6 in					
		572-572	SDV-8" E	200 mm/8 in					
		572-573	SDV-12" E	300 mm/12 in		0.04 mm/0.002 in			
		572-574	SDV-18" E	450 mm/18 in					
		572-575	SDV-24" E	600 mm/24 in		0.05 mm/0.002 in			
		572-576	SDV-32" E	800 mm/32 in		0.06 mm/0.0025 in			
		572-577	SDV-40" E	1000 mm/40 in		0.07 mm/0.003 in			
Vertical multi-function type (equipped with double reading function)	Metric	572-580-10*1	SDV-10F	100 mm	0.01 mm	0.03 mm	0.01 mm (Radius indication, not diameter)		Approx. 5,000 hours
		572-581-10*1	SDV-15F	150 mm					
		572-582-10*1	SDV-20F	200 mm					
		572-583-10*1	SDV-30F	300 mm		0.04 mm			
		572-584-10*1	SDV-45F	450 mm					
		572-585-10*1	SDV-60F	600 mm		0.05 mm			
		572-586-10*1	SDV-80F	800 mm		0.06 mm			
		572-587-10*1	SDV-100F	1000 mm		0.07 mm			
	Metric/Inch	572-590-10*1	SDV-4" F	100 mm/4 in	0.0005 in/0.01 mm	0.03 mm/0.001 in	0.01 mm/0.0005 in (Radius indication, not diameter)		
		572-591-10*1	SDV-6" F	150 mm/6 in					
		572-592-10*1	SDV-8" F	200 mm/8 in					
		572-593-10*1	SDV-12" F	300 mm/12 in		0.04 mm/0.002 in			
		572-594-10*1	SDV-18" F	450 mm/18 in					
		572-595-10*1	SDV-24" F	600 mm/24 in		0.05 mm/0.002 in			
		572-596-10*1	SDV-32" F	800 mm/32 in		0.06 mm/0.0025 in			
		572-597-10*1	SDV-40" F	1000 mm/40 in		0.07 mm/0.003 in			

*1 Available to special order
*2 High slider speed does not cause data errors. Position feedback and output data may not be used while the slider is moving.

Mitutoyo reserves the right to change any or all aspects of any product specification, including prices, designs and service content, without notice.

DIMENSIONS

Unit: mm

SD-G

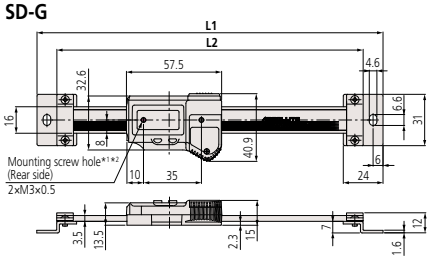

SD-AX

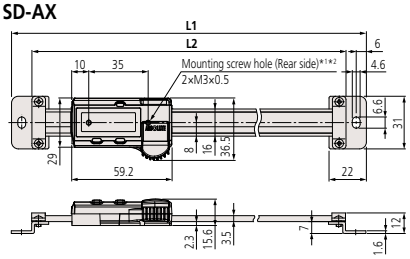

SD-D

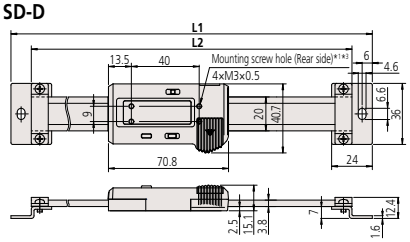

SDV-D

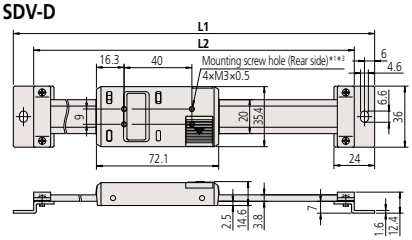

SD-E (to 300 mm)/**SD-F** (to 300 mm)

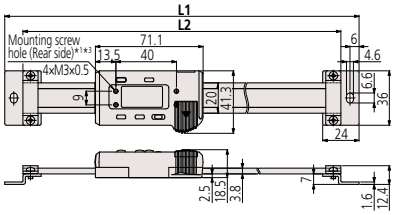

SD-E (450 to 1000 mm)/**SD-F** (450 to 1000 mm)

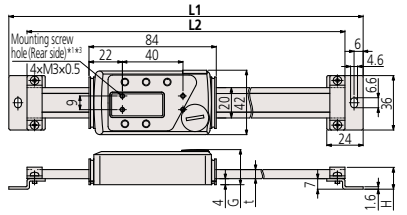

SDV-E (to 300 mm)/**SDV-F** (to 300 mm)

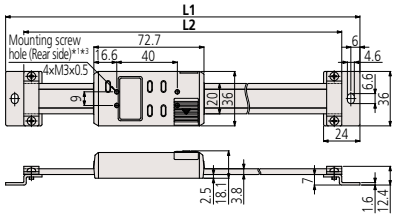

SDV-E (450 to 1000 mm)/**SDV-F** (450 to 1000 mm)

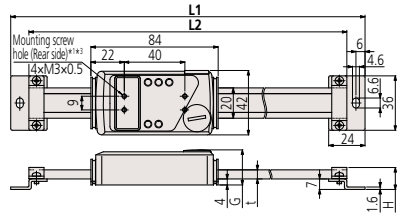

*1 Refer to the dimension table for details of the depth including the screw on the rear of the display.
*2 Mounting screw hole: 2×No.5-40 UNC (Inch type, Inch/Metric switching type)/2×M3×0.5 (Metric type) Screwed depth on the rear side of display unit: under 2 mm
*3 Mounting screw hole: 4×No.5-40 UNC (Inch type, Inch/Metric switching type)/4×M3×0.5 (Metric type) Screwed depth on the rear side of display unit: under 2 mm

SPECIFICATIONS

Model	Range (mm)	Dimensions (mm)					Depth including the screw on the rear of the display	Mass (g)
		L1	**L2**	t	G	H		
SD-G	100	209	185	—	—	—	Less than 2 mm	390
	150	259	235	—	—	—		410
	200	311	287	—	—	—		430
SD-AX	100	209	185	—	—	—		235
	150	259	235	—	—	—		255
	200	311	287	—	—	—		275
SD-30D	300	444	420	—	—	—		370
SD-E **SD-F**	100	244	220	—	—	—		250
	150	294	270	—	—	—		280
	200	344	320	—	—	—		310
	300	444	420	—	—	—		370
	450	594	570	6	23.2	14.6	Less than 3 mm	760
	600	774	750					900
	800	974	950	10	27.2	18.6		1710
	1000	1174	1150					2040
SDV-D	100	244	220	—	—	—	Less than 2 mm	250
	150	294	270	—	—	—		280
	200	344	320	—	—	—		310
	300	444	420	—	—	—		370
SDV-E **SDV-F**	100	244	220	—	—	—		250
	150	294	270	—	—	—		280
	200	344	320	—	—	—		310
	300	444	420	—	—	—		370
	450	594	570	6	23.2	14.6	Less than 3 mm	760
	600	774	750					900
	800	974	950	10	27.2	18.6		1710
	1000	1174	1150					2040

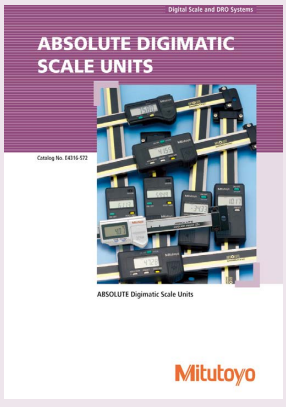

Refer to the ABSOLUTE DIGIMATIC SCALE UNITS Brochure (**E4316**) for more details.

Mitutoyo reserves the right to change any or all aspects of any product specification, including prices, designs and service content, without notice.

Mitutoyo

Linear Scale System Diagram

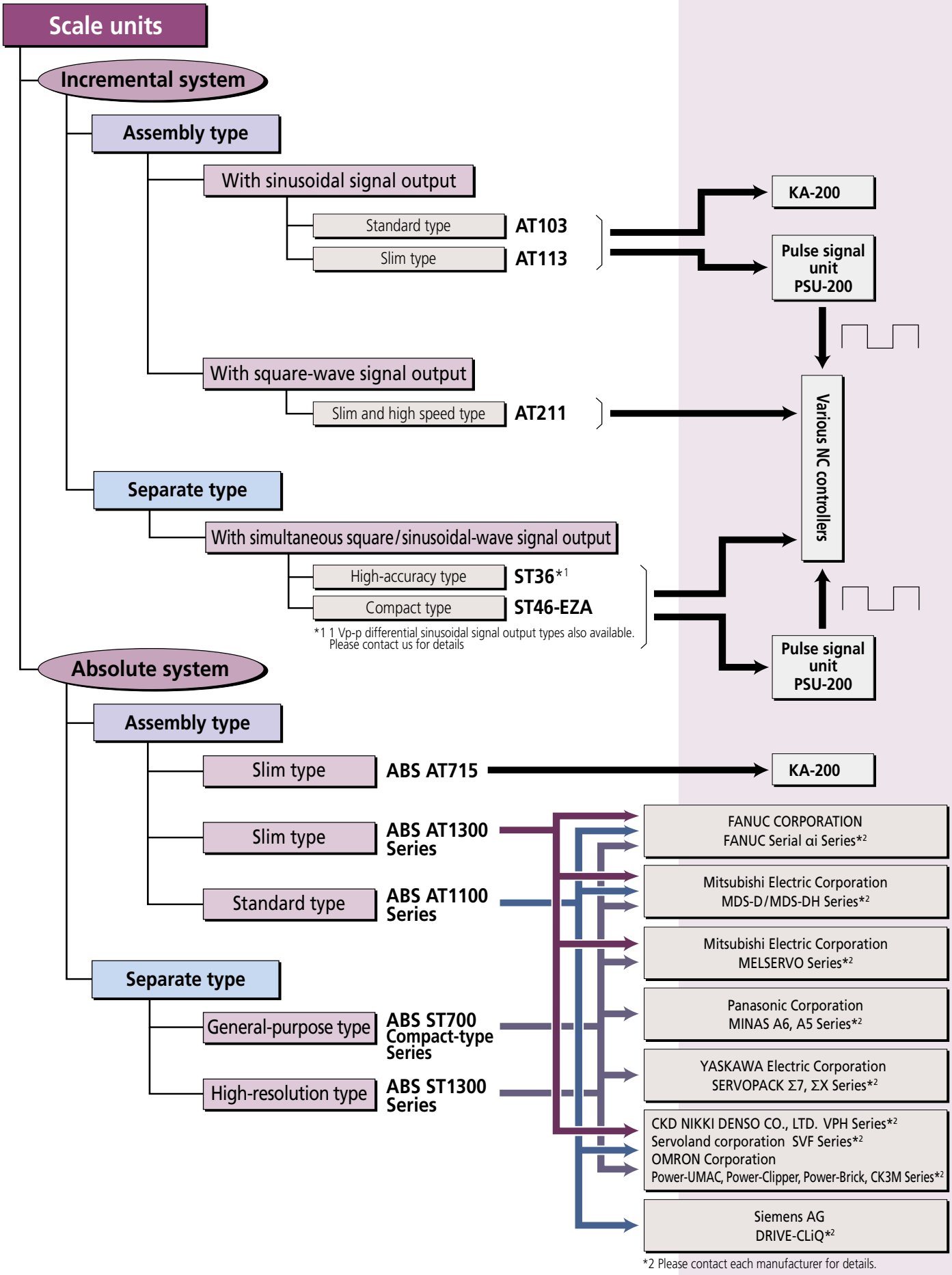

*2 Please contact each manufacturer for details.

Mitutoyo reserves the right to change any or all aspects of any product specification, including prices, designs and service content, without notice.

PROPRIETARY INSPECTION CERTIFICATE

- A wide choice of measuring range is available in this standard type scale unit.
- Connectable to the **KA-200** counter or **PSU-200**.

Linear Scales AT103
SERIES 539 — Standard Type

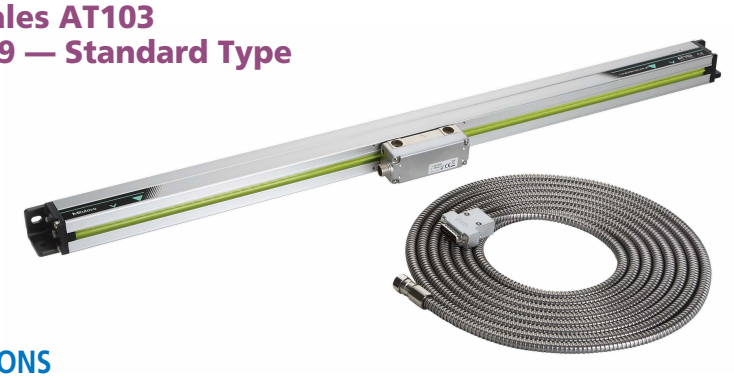

SPECIFICATIONS

Model	AT103
Effective range	100 to 6000 mm
Accuracy (20 °C)	Effective range 100 to 3000 mm: (5 + 5L0/1000) µm Effective range 3250 to 6000 mm: (5 + 8L0/1000) µm
Output signal	Two 90° phase-shifted sinusoidal signals
Maximum response speed	120 m/min (50 m/min when the effective measuring length is 3250 to 6000 mm)
Signal output pitch	20 µm
Scale reference point	Output in 50 mm pitch
Operating temperature	0 to 45 °C

Note 1: High precision model **AT103F** (JIS Class 0, (3 + 3L0/1000) µm) is also available to special order for the effective range of 100 to 2000 mm.
Note 2: Ultra-high precision model **AT103S** (2 + 2L0/1000) µm is also available to special order for the effective range of 100 to 500 mm.
Note 3: The indication accuracy does not include quantizing error. L0=Effective range (mm)

AT103		Effective range* L0 (mm)	Signal cable length (m)
Order No.	Model		
539-111-30	**AT103-100**	100 (4 in)	3
539-112-30	**AT103-150**	150 (6 in)	
539-113-30	**AT103-200**	200 (8 in)	
539-114-30	**AT103-250**	250 (10 in)	
539-115-30	**AT103-300**	300 (12 in)	
539-116-30	**AT103-350**	350 (14 in)	
539-117-30	**AT103-400**	400 (16 in)	
539-118-30	**AT103-450**	450 (18 in)	
539-119-30	**AT103-500**	500 (20 in)	
539-121-30	**AT103-600**	600 (24 in)	
539-123-30	**AT103-700**	700 (28 in)	
539-124-30	**AT103-750**	750 (30 in)	
539-125-30	**AT103-800**	800 (32 in)	
539-126-30	**AT103-900**	900 (36 in)	
539-127-30	**AT103-1000**	1000 (40 in)	5
539-128-30	**AT103-1100**	1100 (44 in)	
539-129-30	**AT103-1200**	1200 (48 in)	
539-130-30	**AT103-1300**	1300 (52 in)	
539-131-30	**AT103-1400**	1400 (56 in)	
539-132-30	**AT103-1500**	1500 (60 in)	
539-133-30	**AT103-1600**	1600 (64 in)	
539-134-30	**AT103-1700**	1700 (68 in)	
539-135-30	**AT103-1800**	1800 (72 in)	
539-136-30	**AT103-2000**	2000 (80 in)	
539-137-30	**AT103-2200**	2200 (88 in)	
539-138-30	**AT103-2400**	2400 (96 in)	7
539-139-30	**AT103-2500**	2500 (100 in)	
539-140-30	**AT103-2600**	2600 (104 in)	
539-141-30	**AT103-2800**	2800 (112 in)	
539-142-30	**AT103-3000**	3000 (120 in)	
539-143-30	**AT103-3250**	3250 (130 in)	10
539-144-30	**AT103-3500**	3500 (140 in)	
539-145-30	**AT103-3750**	3750 (150 in)	
539-146-30	**AT103-4000**	4000 (160 in)	
539-147-30	**AT103-4250**	4250 (170 in)	
539-148-30	**AT103-4500**	4500 (180 in)	
539-149-30	**AT103-4750**	4750 (190 in)	15
539-150-30	**AT103-5000**	5000 (200 in)	
539-151-30	**AT103-5250**	5250 (210 in)	
539-152-30	**AT103-5500**	5500 (220 in)	
539-153-30	**AT103-5750**	5750 (230 in)	
539-154-30	**AT103-6000**	6000 (240 in)	

* Models for the effective range 3250 mm or more are made-to-order.

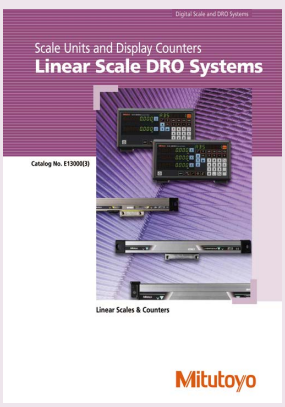

Refer to the Linear Scale DRO Systems Brochure (**E13000**) for more details.

Mitutoyo reserves the right to change any or all aspects of any product specification, including prices, designs and service content, without notice.

Mitutoyo

Linear Scales AT113
SERIES 539 — Slim Type

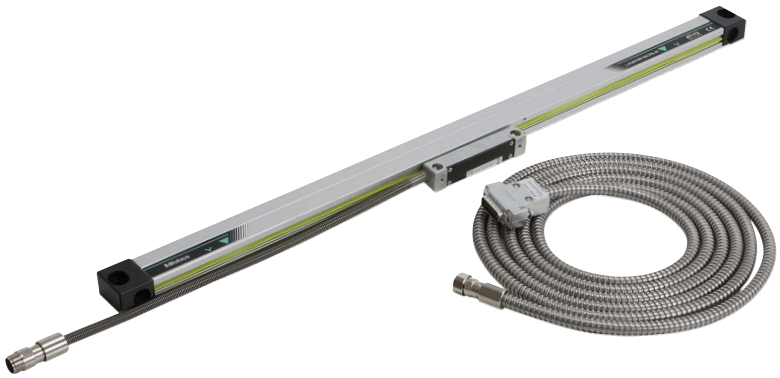

- Slim type with unit sectional dimensions of 22×35 mm.
- Connectable to the **KA-200** counter or **PSU-200**.

SPECIFICATIONS

Model	AT113
Effective range	100 to 1500 mm
Accuracy (20 °C)	(5 + 5L0/1000) µm
Output signal	Two 90° phase-shifted sinusoidal signals
Maximum response speed	120 m/min
Signal output pitch	20 µm
Scale reference point	Output in 50 mm pitch
Operating temperature	0 to 45 °C

Note 1: High precision model **AT113F** (JIS Class 0, 3 + 3L0/1000) µm is also available to special order.
Note 2: Ultra-high precision model **AT113S** (2 + 2L0/1000) µm is also available to special order for the effective range 100 to 500 mm.
Note 3: The indication accuracy does not include quantizing error. L0=Effective range (mm)

AT113		Effective range L0 (mm)	Signal cable length (m)
Order No.	Model		
539-201-30	**AT113-100**	100 (4 in)	3
539-202-30	**AT113-150**	150 (6 in)	
539-203-30	**AT113-200**	200 (8 in)	
539-204-30	**AT113-250**	250 (10 in)	
539-205-30	**AT113-300**	300 (12 in)	
539-206-30	**AT113-350**	350 (14 in)	
539-207-30	**AT113-400**	400 (16 in)	
539-208-30	**AT113-450**	450 (18 in)	
539-209-30	**AT113-500**	500 (20 in)	
539-211-30	**AT113-600**	600 (24 in)	
539-213-30	**AT113-700**	700 (28 in)	
539-214-30	**AT113-750**	750 (30 in)	
539-215-30	**AT113-800**	800 (32 in)	
539-216-30	**AT113-900**	900 (36 in)	
539-217-30	**AT113-1000**	1000 (40 in)	5
539-218-30	**AT113-1100**	1100 (44 in)	
539-219-30	**AT113-1200**	1200 (48 in)	
539-220-30	**AT113-1300**	1300 (52 in)	
539-221-30	**AT113-1400**	1400 (56 in)	
539-222-30	**AT113-1500**	1500 (60 in)	

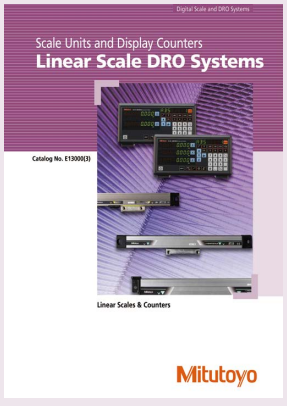

Refer to the Linear Scale DRO Systems Brochure (**E13000**) for more details.

Mitutoyo reserves the right to change any or all aspects of any product specification, including prices, designs and service content, without notice.

Linear Scales AT211-A (Multipoint mounting)
AT211-B (Double-end mounting)
SERIES 539 — Slim and high speed Type

- This is a slim, sealed, 2-phase, square-wave scale that can be directly connected to a control unit.
- Scale alarm LED enables easy maintenance.
- A wide range of specifications to best suit your application.
- Suitable for the control (positioning and speed) of semiconductor manufacturing systems and NC machine tools.

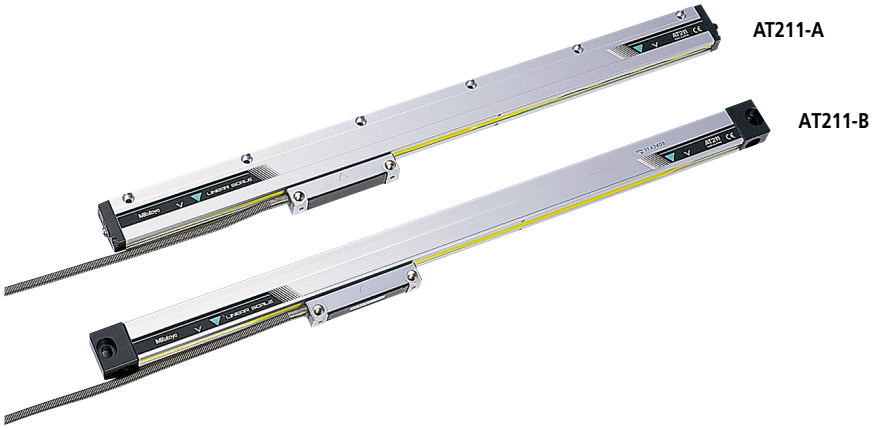

Common specification

Model	AT211
Effective range*	100 to 1500 mm
Accuracy (20 °C)*	(3 + 3L0/1000) µm L0=effective range (mm)
	(2 + 2L0/1000) µm (L0≤500 mm)
Output signal	2-phase square-wave signals (RS-422A compatible)
Maximum response speed*	5.4 to 120 m/min (varies depending on the resolution or minimum edge interval)
Resolution*	0.1/0.2/0.5/1.0/2.5/5.0 µm
Scale reference point*	50 mm pitch/Center point/Left-edge point/Right-edge point
Operating temperature	0 to 45 °C

* Desired specification is selectable.

Meaning of Model No.

AT211 - 0100 A 1 S - P 1 - A B

- Effective range: 100 to 1500 mm
- Mounting method: Multipoint mounting/Double-end mounting
- Scale reference point: 50 mm pitch/Center point/Left edge point/Right edge point
- Indication accuracy: (3 + 3L0/1000) µm/(2 + 2L0/1000) µm
- Resolution/Minimum edge-to-edge interval: 0.1 to 5 µm/125 to 1000 ns, 22 types
- Direction: PA/PB phase
- Head cable: 0.3 to 9 m, 9 types
- Signal cable: 3 to 7 m/None, 10 types

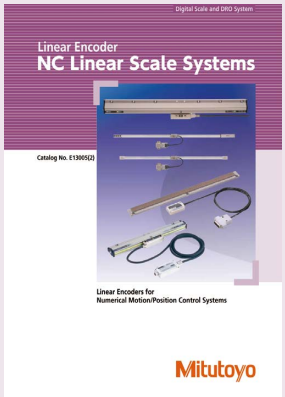

Refer to the NC Linear Scale Systems Brochure (**E13005**) for more details.

Mitutoyo reserves the right to change any or all aspects of any product specification, including prices, designs and service content, without notice.

ABSOLUTE™

Linear Scales ABS AT1300 — Slim Type
Assembly Type Scale Unit for Absolute Systems



ABS AT1300-S



ABS AT1300-H

- Outstanding resistance to contamination compared to conventional optical types by using a new detection principle (in-house testing result).
- Features a new coolant-proof design incorporating a high-performance rubber seal to provide higher reliability in the harsh factory environment.
- Delivers high accuracy and the outstanding resolution of 0.001 µm, the best-in-class in absolute scales.
- Allows space-saving design thanks to a slim form. (**AT500-S** and **AT500-H** are compatible with each other in installation.)
- Supports the interfaces of various manufacturers allowing a variety of system configurations.

SPECIFICATIONS

	High rigidity type	High accuracy type
Model	**ABS AT13□□(A)-S**	**ABS AT13□□(A)-H**
Detection method	Optical	
Resolution	0.001/0.01/0.05 µm	
Maximum response speed	3 m/s	
Maximum effective measuring length	2.2 m	1 m
Accuracy (20 °C)*1	(3 + 3L0/1000) µm	(2 + 2L0/1000) µm
Reference point*2	Center of the effective measuring length	
Operating temperature (humidity) range	0 to 50 °C (RH 20 to 80%, non-condensing)	
Storage temperature (humidity) range	–20 to 70 °C (RH 20 to 80%, non-condensing)	

*1 The indication accuracy does not include quantizing error. L0=Effective range (mm)
*2 Scale is mechanically fixed at this point, therefore expansion caused by temperature fluctuations are relative to this point.

Meaning of Model No.

ABS AT13□□□ - □□□□ - □

- ABS AT13□□□: Interface specifications
- □□□□: Effective range
- □: Type of the scale unit
  - **S**: High rigidity type
  - **H**: High accuracy type

Model	Applicable system
ABS AT135□	FANUC CORPORATION Serial **α**i Interface
ABS AT134□	Mitsubishi Electric Corporation MDS-D/MDS-DH Series
ABS AT134□A	Mitsubishi Electric Corporation MELSERVO servo amplifier MR-J5 Series, MR-J4 Series
ABS AT138□A	YASKAWA Electric Corporation SERVOPACK Σ7, ΣX Series
ABS AT130□A	Mitutoyo ENSIS

Note 1: Be sure to contact each manufacturer for details of the applicable systems.

Note 2: **ABS AT13□□□**
- Resolution
  - **7**: 0.001 µm
  - **4**: 0.01 µm
  - **3**: 0.05 µm
- Transmission method
  - Nothing: Full duplex communication
  - **A**: Half-duplex communication

Signal cable specifications (optional)

Items	Specifications
Cable length	1 m, 2 m, 3 m, 4 m, 5 m, 6 m, 7 m, 8 m, 9 m, 12 m
Cable material	PVC sheath (ø6.5 mm), High-flex connecting cable (No metal conduit)
I/O output connector	Flying lead specifications FANUC specifications Mitsubishi specifications D-sub specifications (Alarm display LED mounted)

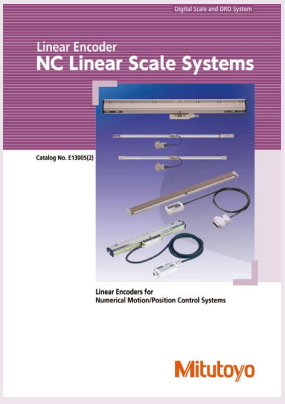

Refer to the NC Linear Scale Systems Brochure (**E13005**) for more details.

Mitutoyo reserves the right to change any or all aspects of any product specification, including prices, designs and service content, without notice.

ABSOLUTE™

Linear Scales ABS AT1100
Assembly Type Scale Unit for Absolute Systems

- Features a new coolant-proof design incorporating a high-performance rubber seal to provide higher reliability in the harsh factory environment.
- The 0.4 mm air gap between the sensors is approximately four times wider than the conventional optical or magnetic sensors. Therefore, the chance of foreign objects lodging in this gap is lower. This air gap is the world's largest in this class of scale used on machine tools.
- The de facto standard multi-point fixing method for the frame is adopted, resulting in high vibration/shock-resistance.
- Due to an improvement in the signal processing technique for the electromagnetic induction ABSOLUTE linear encoder, the repeatability is six times better than our conventional model.
- Being compatible with the high-speed serial interface of each company, a direct connection to the NC controller is possible.



ABS AT1100

H

SPECIFICATIONS

Model	**ABS AT11□3(A)**
Detection method	Electromagnetic induction
Mounting method	Frame multipoint
Effective range	140 to 3040 mm
Resolution	0.05 µm
Maximum response speed	3 m/s
Accuracy (20 °C)	Effective range L_0=140 to 2040 mm: 3 + 5L_0/1000 (µm) Effective range L_0=2240 to 3040 mm: 5 + 5L_0/1000 (µm)
Expansion coefficient	≈8×10^{-6}/K
Vibration resistance	≤196 m/s^2 (20 G) (55 to 2000 Hz)
Shock resistance	Effective range L_0=140 to 2040 mm: ≤ 343 m/s^2 (35 G) Effective range L_0=2240 to 3040 mm: ≤ 294 m/s^2 (30 G) (1/2 sin 11 ms)
Power supply voltage	**ABS AT1153/1143/1103A**: 5 VDC ± 10% **ABS AT1123**: DC24 V (Conforming to DRIVE-CLiQ)
Maximum current consumption	**AT1153**: 300 mA (Max.) **AT1143**: 290 mA (Max.) **AT1123**: 140 mA (Max.) **AT1103A**: 300 mA (Max.)
Operational temperature (humidity) ranges	0 to 50 °C (RH 20 to 80%, non-condensing)
Storage temperature (humidity) ranges	–20 to 70 °C (RH 20 to 80%, non-condensing)

Meaning of Model No.

ABS AT11□3 - □□□□

- **ABS AT11□3**: Interface specifications
- **□□□□**: Effective range

Model	Applicable system
ABS AT1153	FANUC CORPORATION Serial αi Interface
ABS AT1143	Mitsubishi Electric Corporation MDS-D/MDS-DH Series
ABS AT1123	Siemens AG DRIVE-CLiQ
ABS AT1103A	Mitutoyo ENSIS

Note 1: Please contact each manufacturer for details of the applicable systems.

Note 2: **ABS AT11□3□**

- **□**: Transmission method
  - Nothing: Full duplex communication
  - **A**: Half-duplex communication

Signal cable specifications (optional)

Items	Specifications
Cable length	1 m, 3 m, 6 m, 9 m, 12 m
Cable material	PVC sheath ø6.5 Without conduit, High-flex specification with conduit PUR sheath ø6.5 Without conduit
I/O output connector	Flying lead specifications FANUC specifications Mitsubishi specifications Mitutoyo standard specifications Siemens specifications M12 connector specifications

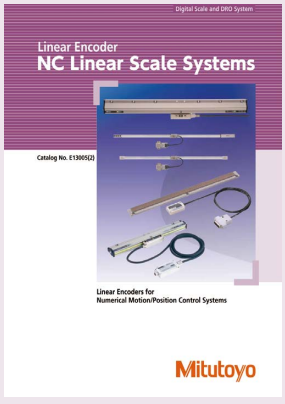

Refer to the NC Linear Scale Systems Brochure (**E13005**) for more details.

Mitutoyo reserves the right to change any or all aspects of any product specification, including prices, designs and service content, without notice.

Mitutoyo

Linear Scales ABS AT715
SERIES 539 — Slim Type



ABSOLUTE™ PROPRIETARY INSPECTRON CERTIFICATE

IP67

- The electromagnetic induction principle adopted means Absolute system-type linear scales are highly resistant to environmental contamination.
- Absolute scales have eliminated the need for origin restoration, also drastically reducing power consumption.

H

SPECIFICATIONS

Model	ABS AT715	
Detection method	Electromagnetic induction	
Minimum resolution	0.001 mm to 0.01 mm (Changeable by parameter on the **KA-200** counter)	
Effective range	100 to 3000 mm	
Accuracy (20 °C)	±5 µm (Lo: 100 to 500 mm), ±7 µm (Lo: 600 to 1800 mm), ±10 µm (Lo: 2000 to 3000 mm) Lo=Effective range (mm)	
Maximum response speed	50 m/min	
Protection level	IP67	
Sliding force	5 N or less	
Signal cable	Standard Accessories Refer to the dimension table shown below for the length.	
Extension cable (optional)	Length	Order No.
	2 m 5 m 7 m	**09AAB674A** **09AAB674B** **09AAB674C**
Connectable counter	**KA-200** Counter	

AT715		Effective range Lo (mm)	Signal cable length (m)
Order No.	Model		
539-801R	**ABS AT715-100**	100 (4 in)	3.5
539-802R	**ABS AT715-150**	150 (6 in)	
539-803R	**ABS AT715-200**	200 (8 in)	
539-804R	**ABS AT715-250**	250 (10 in)	
539-805R	**ABS AT715-300**	300 (12 in)	
539-806R	**ABS AT715-350**	350 (14 in)	
539-807R	**ABS AT715-400**	400 (16 in)	
539-808R	**ABS AT715-450**	450 (18 in)	
539-809R	**ABS AT715-500**	500 (20 in)	
539-811R	**ABS AT715-600**	600 (24 in)	
539-813R	**ABS AT715-700**	700 (28 in)	
539-814R	**ABS AT715-750**	750 (30 in)	
539-815R	**ABS AT715-800**	800 (32 in)	
539-816R	**ABS AT715-900**	900 (36 in)	
539-817R	**ABS AT715-1000**	1000 (40 in)	5
539-818R	**ABS AT715-1100**	1100 (44 in)	
539-819R	**ABS AT715-1200**	1200 (48 in)	
539-820R	**ABS AT715-1300**	1300 (52 in)	
539-821R	**ABS AT715-1400**	1400 (56 in)	
539-822R	**ABS AT715-1500**	1500 (60 in)	
539-823R	**ABS AT715-1600**	1600 (64 in)	
539-824R	**ABS AT715-1700**	1700 (68 in)	
539-825R	**ABS AT715-1800**	1800 (72 in)	
539-860R	**ABS AT715-2000**	2000 (80 in)	
539-861R	**ABS AT715-2200**	2200 (88 in)	
539-862R	**ABS AT715-2400**	2400 (96 in)	7*
539-863R	**ABS AT715-2500**	2500 (100 in)	
539-864R	**ABS AT715-2600**	2600 (104 in)	
539-865R	**ABS AT715-2800**	2800 (112 in)	
539-866R	**ABS AT715-3000**	3000 (120 in)	

* Combination of a 5 m signal cable and a 2 m extension cable

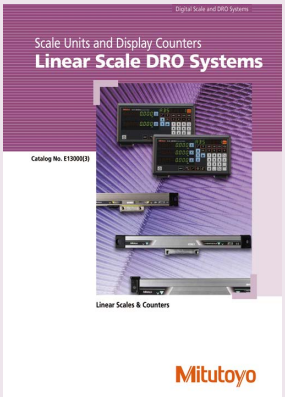

Refer to the Linear Scale DRO Systems Brochure (**E13000**) for more details.

Mitutoyo reserves the right to change any or all aspects of any product specification, including prices, designs and service content, without notice.

KA-200 Counter
SERIES 174 — Standard Type

- **KA-200** counter is high-performance unit that can be used as "standard counter" or "lathe counter".
- Downsizing and weight saving have been realized.
- The RS-232C interface enables connection to a PC or printer.

Optional Accessory

- Code out unit: **06AET993**



174-183
KA-212

SPECIFICATIONS

Order No.	**174-183**☐	**174-185**☐
Model	**KA-212**	**KA-213**
Number of axes to be displayed	2	3
Resolution	(Changeable according to the parameter) When **AT100** is connected: 0.05 to 0.0001 mm When **AT715** is connected: 0.01 to 0.001 mm	
Display/digit	Main display: 9 digits including sign Sub display: 8 digits	
Power supply voltage	AC100 to 240 V, 50/60 Hz	
Dimensions	300 (W) ×70 (D) ×167 (H) mm	
Output (optional)	RS-232C	
Mass	1.25 kg	1.3 kg

☐: To denote your AC power cable add the following suffixes to the order No. :
A for UL/CSA, D for CEE, DC for CCC, E for BS, K for KC, C and No suffix are required for PSE.

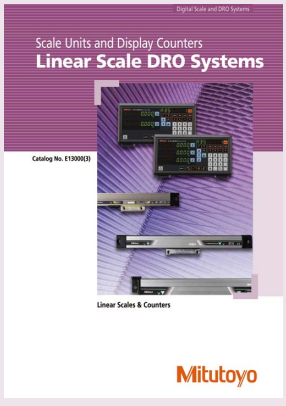

Refer to the Linear Scale DRO Systems Brochure (**E13000**) for more details.

Mitutoyo reserves the right to change any or all aspects of any product specification, including prices, designs and service content, without notice.

Linear scale counter

FUNCTIONS

Function \ Type		High performance  **KA-200 Counter**
Zero-setting	ZERO	●
Preset	P.SET	●
Resolution setting	0.0005 / 0.1	●
Measurement direction setting		●
mm/inch conversion	mm / E	●
Diameter display	DIA	●
Scale reference point setting*1	SET	●
1/2 calculation	1/2	●
Coordinate system switching	N	●
Bolt-hole circle machining		●*2
Pitch machining		●
Zero approach machining (INC mode)		●
Addition of 2-axis data	Z1+Z2	●*3
Linearity error compensation		●
Pitch error compensation		●*1
Smoothing	1234	●
Memory backup		●
Expansion/contraction coefficient setting		—
Lower digit blanking out	123	●
External zero-setting	ZERO SET IN PUT	▲*4
RS-232C output	RS-232C OUTPUT	▲*4
USB output	USB	▲*5
Limit signal output	LIMIT OUTPUT	—
Error message	Error	●

●: Standard function, ▲: Optional function, —: Not available
*1 Only available when connecting with **AT100** Series.
*2 Not available in single-axis use
*3 Only available for 3-axis model (**KA-213**)
*4 Code out unit (**06AET993**) is required.
*5 Text can be output by code out unit and foot switch

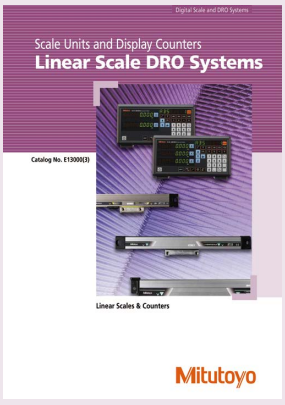

Refer to the Linear Scale DRO Systems Brochure (**E13000**) for more details.

Mitutoyo reserves the right to change any or all aspects of any product specification, including prices, designs and service content, without notice.

- Outputs 2-phase sinusoidal wave signals at 4 µm pitch.
- The maximum effective measuring length is 3000 mm when the resolution is 0.01/0.02/0.05/0.1 µm (2-phase square-wave is output).
- Compact detector head enables space saving design.
- Along with the output specifications of 2-phase sinusoidal wave and 2-phase square-wave, the output specification of 1 Vp-p wave is also available.
- Equipped with the function to display signal errors on the LED.

Linear Scales ST36
SERIES 579 — High Accuracy Type



SPECIFICATIONS

Model	**ST36**
Detection method	Optical
Output signal	**ST36A**: 2 Vp-p sinusoidal signals **ST36B**: 2-phase square-wave signals (RS-422A compatible), Alarm reset input **ST36C**: 2-phase square-wave signals (RS-422A compatible), 2-phase sinusoidal signals **ST36D**: 1 Vp-p differential sinusoidal signals
Main scale grating pitch	8 µm
Signal output pitch	4 µm
Effective range	10 to 3000 mm
Accuracy (20 °C)*1	±0.5 µm, ±1 µm, ±2 µm/m
Maximum response speed*2	1200 mm/s
Scale reference point	10 to 80 mm: 1 center point; 100 to 300 mm: 50 mm pitch
Power supply voltage	5 VDC ± 5%
Operating temperature (humidity) range	0 to 40 °C (20 to 80% RH, non-condensing)
Storage temperature (humidity) range	–20 to 60 °C (20 to 80% RH, non-condensing)
Head cable length	1 m (high-flex connecting cable)

*1

Effective range	Accuracy
300 mm or less	±0.5 µm
500 mm or less	±1 µm
1000 mm or less	±2 µm
3000 mm or less	±2 µm/m

*2 Maximum response speed when sinusoidal signals are output

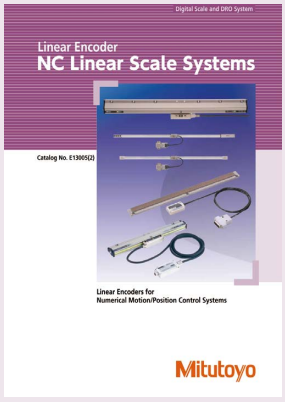

Refer to the NC Linear Scale Systems Brochure (**E13005**) for more details.

Mitutoyo reserves the right to change any or all aspects of any product specification, including prices, designs and service content, without notice.

Linear Scales ST46-EZA
SERIES 579 — Compact Type

Glass Scale Type



Metal Tape Scale Type

•Double-end mounting design



•Double-sided tape mounting design

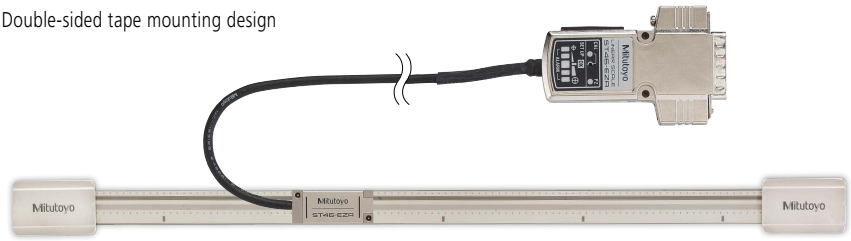

- Includes an automatic adjusting function for the signal (EZA function) at the push of a button.
- Detector head mounting and signal adjustment possible without oscilloscope or PC.
- A setup indicator for checking signal strength is included.
- When connected with a PC it is possible to check signal strength and set parameter (Optional application program required).
- I/F circuit integrated in connector shell reduces volume to compared to conventional interface.
- The thickness of the detector head is only 7.5 mm. The metal tape scale type has a mounting surface area of 12.5 by 9.325 mm, allowing use in applications where a space-saving design is important.
- Glass and metal tape versions are available.

SPECIFICATIONS

Model	ST46-EZA	
Detection method	Optical	
Scale type	Glass	Metal tape
Main scale grating pitch	20 µm	
Output signal	Type B: 2-phase square-wave signals (RS-422A compatible), reference point pulse, external reset input. Type C: 2-phase square-wave signals (RS-422A compatible), reference point pulse, 2-phase sinusoidal signals.	
Effective range	10 to 3000 mm	
Accuracy (20 °C)	Effective range 10 to 300 mm: ±1 µm Effective range 350 to 500 mm: ±2 µm Effective range 600 to 1000 mm: ±3 µm Effective range 1100 to 3000 mm: ±3 µm/m	Effective range 10 to 1000 mm: ±5 µm Effective range 1100 to 3000 mm: ±5 µm/m (The above accuracy applies to individual scales. For double-end mounting designs, perform point-to-point correction after ensuring the metal tape is tensioned correctly.)
Maximum response speed	2.6 m/s (at the point where the sinusoidal signal amplitude has decreased by 3 dB)	
Scale reference point	10 to 80 mm: 1 center point; 100 to 300 mm: 50 mm pitch	
Power supply voltage	5 VDC ± 5%	
Operating temperature (humidity) range	0 to 40 °C (RH 20 to 80%, non-condensing)	
Storage temperature (humidity) range	–20 to 60 °C (RH 20 to 80%, non-condensing)	
Head cable length	1 m (high-flex connecting cable)	

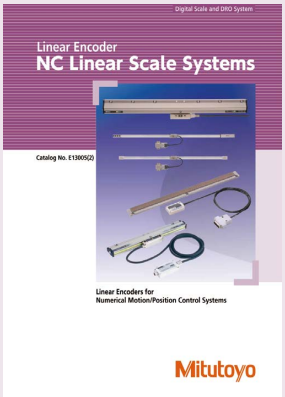

Refer to the NC Linear Scale Systems Brochure (**E13005**) for more details.

Mitutoyo reserves the right to change any or all aspects of any product specification, including prices, designs and service content, without notice.

ABSOLUTE™

Linear Scales ABS ST700
SERIES 579 — General-purpose Type

- Absolute measurement with separate type scales
- Non-contact detection is optimal for high speed and high acceleration devices such as linear motors
- Electromagnetic induction principle means scales are unaffected by water and oil contamination
- The detector head is approximately 1/3 the previous model size: 50 mm (W) × 28 mm (D) ×11 mm (H)
- Cable outlets can be in four directions, with mounting holes on the top and sides
- Compatible with servo amplifiers from a range of companies (high-speed serial interfaces)



SPECIFICATIONS

Model	ABS ST700	
Scale type	Scale base	
Resolution	0.1 µm	
Detection method	Electromagnetic induction	
Max. effective range	100 to 3000 mm	3200 to 6000 mm
Accuracy (20 °C)	5 + (5L/1000) µm L=Effective range (mm)	5 + (5L/1000) µm L=Effective range (mm)
Maximum response speed	5 m/s	
Power supply voltage	5 VDC ± 10% (at the detection head) (Ripple+spike noise component should be less than 100 mV)	
Maximum current consumption	270 mA	
Head cable length	1 m (high-flex connecting cable)	
Maximum cable length	29 m (including the head cable length)	
Operating temperature (humidity) range	0 to 50 °C (RH 20 to 80%, non-condensing)	0 to 50 °C (RH 20 to 70%, non-condensing)
Storage temperature (humidity) range	–20 to 70 °C (RH 20 to 80%, non-condensing)	–20 to 60 °C (RH 20 to 70%, non-condensing)

Meaning of Model No.

ABS ST7 0 8 A L - 100 A - R

Absolute type

Series name
Separate Type ABSOLUTE Linear Scale
ABS ST700 Compact-type Series (Effective range ≤ 3 m)
ABS ST700 Compact-type Series (3.2 m ≤ Effective range ≤ 6 m)

Interface specification*1
0: Supports Mitutoyo ENSIS high-speed serial interface
ABS ST708A
4: Supports Mitsubishi Electric Corporation, high-speed serial interface
ABS ST748A, **ST748AL**, **ABS ST748**
5: Supports FANUC CORPORATION, high-speed serial interface
ABS ST758, **ST758L**
7: Supports Panasonic Corporation, high-speed serial interface
ABS ST778A
8: Supports YASKAWA Electric Corporation, high-speed serial interface
ABS ST788A, **ST788AL**

Detection head form and resolution
8: Form: 50 (W)×28 (D)×11 (H) mm
Resolution: 0.1 µm
9: 0.05 µm resolution (to special order)

Transmission method
A: 2-wire system
Nothing: 4-wire system

Nothing: 100 to 3000 mm
L: 3200 to 6000 mm

Effective range: 100 to 6000 mm

A: Scale base type

Head cable outlet direction
R: Right side
L: Left side
U: Upper side
D: Lower side

Available Interfaces*1

FANUC CORPORATION, FANUC Serial αi Series
Mitsubishi Electric Corporation, MDS-D/MDS-DH Series
Mitsubishi Electric Corporation, MELSERVO Series Servo Amplifier MR-J5 Series, MR-J4 Series, MR-J3 Series
YASKAWA Electric Corporation, SERVOPACK Σ7, ΣX Series
Panasonic Corporation, MINAS A6, A5 Series
Mitutoyo ENSIS*2 CKD NIKKI DENSO CO., LTD. VPH Series Servoland Corporation SVF Series OMRON Corporation Power-UMAC, Power-Clipper, Power-Brick, CK3M Series

*1 Be sure to contact each manufacturer for details of the applicable systems (availability of connection).
*2 ENSIS is a registered trademark of Mitutoyo Corporation.

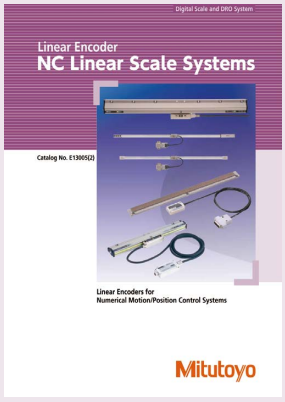

Refer to the NC Linear Scale Systems Brochure (**E13005**) for more details.

Mitutoyo reserves the right to change any or all aspects of any product specification, including prices, designs and service content, without notice.

Mitutoyo

ABSOLUTE™

Linear Scales ABS ST1300 SERIES 579

Double-end mounting type



Center mounting

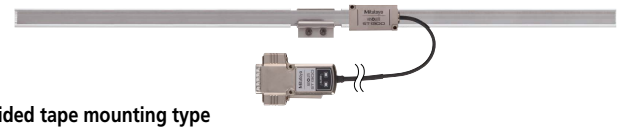

Double-sided tape mounting type



- Effective range: 12 m, Maximum response speed: 8 m/s, Resolution: 1 nm
- Various interfaces are supported.
- A new detection method has improved robustness in regards to contamination resistance and gap tolerance (in-house testing result).
- Can be mounted using double-sided tape or screws (on both sides or at the center of the unit).
- Signal check program enables integrity check and maintenance.

H

SPECIFICATIONS

Model	ABS ST1300			
Detection method	Optical			
Scale type	Double-end mounting	Center mounting	Double-sided tape mounting	
Maximum effective range	12000 mm	6000 mm	3000 mm	
Fixing part material	—	—	Equivalent to iron	Other than equivalent to iron
Accuracy (20 °C)	±5 µm (1 m or less), ±5 µm/m (1.1 m or more)*4	With system parameters: ±5 µm (1 m or less), ±5 µm/m (1.1 m or more) Without system parameters: ±10 µm (1 m or less), ±10 µm/m (1.1 m or more)	±5 µm (1 m or less), ±5 µm/m (1.1 m or more)	
Maximum response speed	8 m/s or less			
Expansion coefficient	≈10×10^{-6}/K*5	≈10×10^{-6}/K	≈10×10^{-6}/K*2	
Power supply	5 VDC ± 10%			
Maximum current consumption	270 mA or 250 mA (depends on interface)			
Cable length	1 m (high-flex connecting cable)			
Maximum cable length	29 m (including head cable)			
Usable temperature (humidity) range	0 to 50 °C (RH 20 to 70%, non-condensing)			0 to 50 °C*1 (RH 20 to 70%*3, non-condensing) When mounting: ±10 °C
Storage temperature (humidity) range	–20 to 70 °C (RH 20 to 70%, non-condensing)			

*1 Double-sided tape fixing type, careful for the condition of operating temperature range, in case that the sealing surface material is except for Fe equivalent.
*2 Thermal expansion coefficient occasionally change, as the difference between scale material's and sealing surface material's is excessive.
*3 Double-sided tape fixing type, the accuracy compensation occasionally change, in case that the sealing surface material is except for Fe equivalent and stored in environment over operating temperature range. Imaging these conditions, double-end fixing type is adopted.
*4 Tension fix is adopted to be stable the temperature property. Because scale tension is longer 250 µm/m, the accuracy compensation is needed over the system.
*5 Thermal expansion coefficient after mounted conform to expansion/contraction of mounted surface by changing outer temperature (Double-end fixing type).
Note: For details on specification, mounting procedure, and adjustments, refer to the corresponding brochure and operation manual.

Meaning of Model No.

ABS ST13 4 1 A - 1200 D

Absolute type

Series name
Separate Type ABSOLUTE Linear Scale

Interface specification*1
0:Supports Mitutoyo ENSIS high-speed serial interface
ABS ST130□A
4:Supports Mitsubishi Electric Corporation, high-speed serial interface
ABS ST134□A
5:Supports FANUC CORPORATION, high-speed serial interface
ABS ST135□
7:Supports Panasonic Corporation, high-speed serial interface
ABS ST137□A
8:Supports YASKAWA Electric Corporation, high-speed serial interface
ABS ST138□A

Resolution
1: Resolution 0.01 µm
2: Resolution 0.001 µm

Transmission method
A: Half-duplex method
Nothing: Full duplex method or Half-duplex method/Half-duplex method

Effective range: 10 to 12000 mm

Scale mount
D: Double-end mounting
E: Double-sided tape mounting
F: Center mounting (With system parameters)
G: Center mounting (Without system parameters)

Available Interfaces*1

FANUC CORPORATION, FANUC Serial αi Series
Mitsubishi Electric Corporation, MELSERVO Series Servo Amplifier MR-J5 Series, MR-J4 Series
YASKAWA Electric Corporation, SERVOPACK Σ7, ΣX Series
Panasonic Corporation, MINAS A6, A5 Series
Mitutoyo ENSIS*2

*1 Be sure to contact each manufacturer for details of the applicable systems (availability of connection).
*2 ENSIS is a registered trademark of Mitutoyo Corporation.

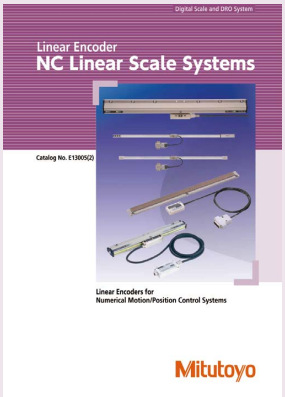

Refer to the NC Linear Scale Systems Brochure (**E13005**) for more details.

Mitutoyo reserves the right to change any or all aspects of any product specification, including prices, designs and service content, without notice.

Pulse signal interface unit PSU-200 SERIES 539

- The **PSU-200** splits the sinusoidal signal output by Mitutoyo linear scales into a minimum of four and a maximum of 200 divisions, and converts the signal to a square-wave signal so that NC feedback systems, measurement control devices, etc., can be used with linear scales in order to achieve highly accurate positioning.



SPECIFICATIONS

Order No.	**539-005**
Model	**PSU-200**
Number of axes	1
Input	Input connector DA-15S-N (JAE) or equivalent Input signal: 2-phase sinusoidal and the reference voltage, Reference point, Scale alarm
Output	Output connector: MR-20RMA (HONDA TSUSHIN KOGYO CO., LTD.) Output signal: 2-phase square-wave signals (PA, PB), reference point (PZ), Alarm, Alarm reset, Photo-coupler
Number of divisions	4, 8, 10, 20, 40, 80, 100, 200 (Selectable by switch)
Function	Setting the number of divisions, setting the minimum edge interval, and maximum response speed. Detection of broken wires or short circuits and abnormalities (alarm), detection of signal errors (alarm). Power supply voltage low alarm (warning light only), switching between high-impedance mode and alarm signal output mode. Reference position detection light, hysteresis width settings (directly linked to No. of divisions), external alarm reset input (Photo-coupler)
Power supply voltage	5 VDC ± 5%
Current consumption	200 mA
Operating temperature range	0 to 50 °C
Storage temperature range	–20 to 70 °C
Dimensions	160 (W) ×100 (D) ×28 (H) mm
Mass	Approx. 620 g

Serial signal interface unit PSU-251/252 SERIES 539

- **PSU-251** Series is a serial signal interface unit for incremental linear scales.

The interface outputs serial data equivalent to 400 divisions from the sinusoidal signal (according to EIA Standard **RS-422-A**)

- The **PSU-251** can be connected to Mitsubishi Electric Corporation's MR-J4/MR-J3 Series servo amplifier.
- Since this unit is connected to incremental linear scales, the reference point should be passed through to determine the absolute position.



SPECIFICATIONS

Order No.	**539-006**	**539-007**
Model	**PSU-251**	**PSU-252**
Number of axes	1	
Input	2-phase sinusoidal signals and standard voltage, reference signal, scale alarm signal. Maximum input frequency: 500 kHz	
Output	Mitsubishi Electric Corporation MR-J4/MR-J3 Series High-speed serial data*	Panasonic Corporation Motor Business Unit MINAS-A5, A5L, A5N, A5NL Series* MINAS-A4, A4P, A4N, A4NL Series*
Number of divisions	400	
Function	Alarm detection: Broken wires, short circuits in the scale and abnormalities. Alarm output: Status data is output through serial communication and the PWR light blinks. Also, the PWR light turns on.	
Power supply voltage	Power supply from the servo amplifier: 5 VDC ± 5% External power supply: 5 VDC ± 5% Power supply is selected with the shorting link for the terminal block used to supply external power. To choose a servo amplifier or external power supply, please refer to the servo amplifier power specifications (in particular, the maximum supplied current) and the power supply specifications of the scale that is used.	
Current consumption	150 mA (not including the scale)	
Operating temperature range	0 °C to 40 °C	
Storage temperature range	–20 °C to 70 °C	

* Please contact each manufacturer for details of the applicable systems.

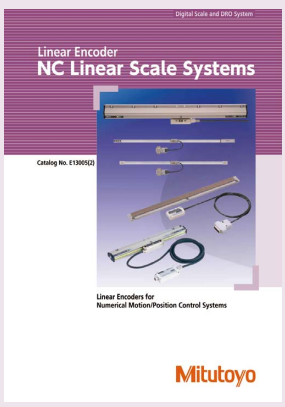

Refer to the NC Linear Scale Systems Brochure (**E13005**) for more details.

Mitutoyo reserves the right to change any or all aspects of any product specification, including prices, designs and service content, without notice.

Glossary

Absolute system
A measurement mode in which every point measurement is made relative to a fixed origin point.

Incremental system
A measurement mode in which every point measurement is made relative to a certain stored reference point.

Origin offset
A function that enables the origin point of a coordinate system to be translated to another point offset from the fixed origin point. For this function to work, a system needs a permanently stored origin point.

Restoring the origin point
A function that stops each axis of a machine accurately in position specific to the machine while slowing it with the aid of integrated limit switches.

Sequence control
A type of control that sequentially performs control steps according to a prescribed order.

Numerical control
A way of controlling the movements of a machine by encoded commands created and implemented with the aid of a computer (CNC). A sequence of commands typically forms a 'part program' that instructs a machine to perform a complete operation on a workpiece.

Binary output
Refers to output of data in binary form (ones and zeros) that represent numbers as integer powers of 2.

RS-232C
An interface standard that uses an asynchronous method of serial transmission of data over an unbalanced transmission line for data exchange between transmitters located relatively close to each other. It is a means of communication mainly used for connecting a personal computer with peripherals.

Line driver output
This output features fast operating speeds of several tens to several hundreds of nanoseconds and a relatively long transmission distance of several hundreds of meters. A differential-voltmeter line driver (RS-422A compatible) is used as an I/F to the NC controller in the linear scale system.

BCD
A notation of expressing the numerals 0 through 9 for each digit of a decimal number by means of four-bit binary sequence. Data transmission is one-way output by means of TTL or open collector.

RS-422
An interface standard that uses serial transmission of bits in differential form over a balanced transmission line. RS-422 is superior in its data transmission characteristics and in its capability of operating with only a single power supply of 5 VDC.

Accuracy
The accuracy specification of a scale is given in terms of the maximum error to be expected between the indicated and true positions at any point, within the range of that scale, at a temperature of 20 °C. Since there is no international standard defined for scale units, each manufacturer has a specific way of specifying accuracy. The accuracy specifications given in our catalog have been determined using laser interferometry.

Narrow range accuracy
Scale gratings on a scale unit normally adopt 20 µm pitch though it varies according to the kind of scale. The narrow range accuracy refers to the accuracy determined by measuring one pitch of each grating at the limit of resolution (1 µm for example).

Specifying Linear Scale Accuracy

Positional Indication accuracy

The accuracy of a linear scale is determined by comparing the positional value indicated by the linear scale with the corresponding value from a laser length measuring machine at regular intervals using the accuracy inspection system as shown in the figure below. As the temperature of the inspection environment is 20 °C, the accuracy of the scale applies only in an environment at this temperature. Other inspection temperatures may be used to comply with internal standards.

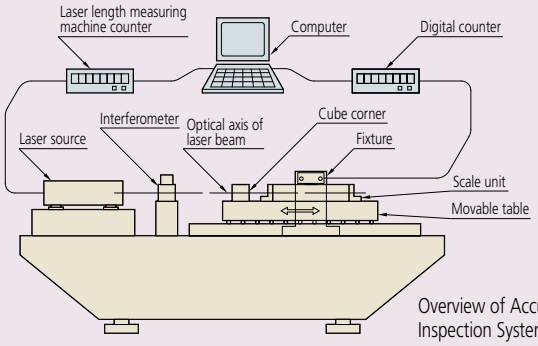

Overview of Accuracy Inspection System

The accuracy of the scale at each point is defined in terms of an error value that is calculated using the following formula:

Error = Value indicated by Laser length measuring machine – Corresponding value indicated by the linear scale

A graph in which the error at each point in the effective positioning range is plotted is called an accuracy diagram.
There are two methods used to specify the accuracy of a scale, unbalanced or balanced, described the right.

(1) Unbalanced accuracy specification - maximum minus minimum error

This method simply specifies the maximum error minus the minimum error from the accuracy graph, as shown below. It is of the form: $E = (\alpha + \beta L)$ µm. L is the effective range (mm), and α and β are factors specified for each model.

For example, if a particular type of scale has an accuracy specification of $(3 + \frac{3L}{1000})$ µm and an effective range of 1000 mm, E is 6 µm.

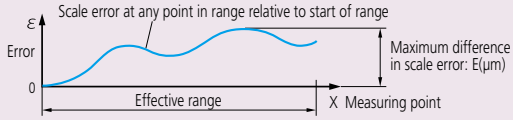

(2) Balanced accuracy specification - plus and minus about the mean error

This method specifies the maximum error relative to the mean error from the accuracy graph. It is of the form: $e = \pm\frac{E}{2}$ (µm). This is mainly used in separate-type (retrofit) scale unit specifications.

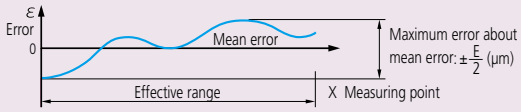

A linear scale detects displacement based on graduations of constant pitch. Two-phase sinusoidal signals with the same pitch as the graduations are obtained by detecting the graduations. Interpolating these signals in the electrical circuit makes it possible to read a value smaller than the graduations by generating pulse signals that correspond to the desired resolution. For example, if the graduation pitch is 20 µm, interpolated values can generate a resolution of 1 µm. The accuracy of this processing is not error-free and is called interpolation accuracy. The linear scale's overall positional accuracy specification depends both on the pitch error of the graduations and interpolation accuracy.



Profile Projectors
PJ-PLUS

Refer to page J-3 for details.



Motor-Driven Z-axis Measuring Microscopes
MF-J/MF-UJ/MF-UK

Refer to pages J-6, J-8 for details.



Varifocal Lens
TAGLENS

Refer to page J-15 for details.

J

Optical Measuring

MeasurLink® ENABLED
Data Management Software by Mitutoyo

Measurement Data Network System

MeasurLink® is a measurement data management system based on databases (SQL Server). You can build a network to manage the measurement results and measuring machines by simply combining the functions necessary for your purpose.

MeasurLink® is a registered trademark of Mitutoyo Corporation in Japan and Mitutoyo America Corporation in the United States.

INDEX

Profile Projectors

Profile Projectors
PJ-PLUS J-3
PJ-H30 J-3
PV-5110 J-4
PH-3515F J-4
Quick Guide to Precision Measuring Instruments J-5

Microscopes

Measuring Microscopes
MF J-6
MF-U J-7
Hyper MF/MF-U J-9
Toolmakers' Microscopes
TM J-10
Data Processing Units
Vision Unit J-11
QM-Data200 J-12
Video Microscope Units
FS70 J-13
VMU J-14
Objectives
FS J-15
Varifocal Lens
Varifocal Lens **TAGLENS** J-15
Mini Scope J-16
Pocket Comparators J-16
Clear Loupe J-16
Quick Guide to Precision Measuring Instruments J-17

Mitutoyo

MeasurLink® ENABLED
Data Management Software by Mitutoyo

PJ-PLUS
SERIES 302 — Premium Benchtop Series

- The profile projector that "can be operated intuitively" even by inexperienced operators and also has excellent durability and energy saving performance thanks to adoption of an "LED illumination source" and "fan-less cooling system".
- Provides stable dimension and angle measurements in harsher environments, such as manufacturing and processing lines, than can be handled by conventional models.
- Stepless illumination has been adopted so as to allow precise adjustment of lighting to suit the surface texture and color of the workpiece.



PJ-P2010A

SPECIFICATIONS

Model No.		PJ-P1010A		PJ-P2010A	
Order No.		302-801-10	302-801-20	302-802-10	302-802-20
Unit system for the counter unit		mm/in	mm	mm/in	mm
Projected image		Inverted-reversed			
Protractor screen	Effective diameter	ø315 mm (12.4 in)			
	Screen rotation	±360° (±370° for display)			
	Angle display	Digital counter (ABS/INC mode switching, Zero Set)			
	Resolution	1′ or 0.01° (switchable)			
	Cross-hairs	90° (solid lines)			
Projection lens	Magnification	10X (standard accessory), 20X, 50X, 100X 10X, 20X (equipped with an external half-mirror for coaxial surface illumination)			
	Lens mount	Bayonet mount			
Illumination	Contour illumination	White LED light source, Telecentric, Variable brightness adjustment			
	Surface illumination	White LED light source, With an adjustable condenser lens, Variable brightness adjustment			
Resolution for X/Y counter		0.001 mm or 0.0001 in/0.001 mm			
Measuring unit		Digital scale			
Measuring range (X×Y)		100×100 mm		200×100 mm	

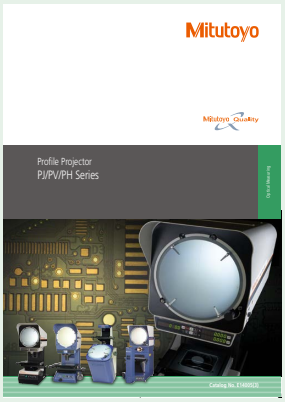

Refer to the Profile Projector Brochure (**E14005**) for more details.

MeasurLink® ENABLED
Data Management Software by Mitutoyo

PJ-H30
SERIES 303 — Premium Benchtop Series

- Conforms to JIS B 7184: 2021 "Profile projectors".
- High-end model that achieves accuracy of ±(3.0 + 0.02L) µm
- ø306 mm screen makes erect-unreversed images more visible.
- The largest measuring range in the class, up to 300×170 mm.
- Elevating shaft mechanism for the screen head reduces operator fatigue.



PJ-H30D3017B

SPECIFICATIONS

Protractor screen	Model No.	PJ-H30A1010B	PJ-H30A2010B	PJ-H30A2017B	PJ-H30A3017B
	Order No.	303-712-1*1	303-713-1*1	303-714-1*1	303-715-1*1
Projected image		Erect			
Protractor screen	Effective diameter	ø306 mm (12 in)			
	Screen rotation	±360° (±370° for display)			
	Angle display	Digital counter (ABS/INC mode switching, Zero Set)			
	Resolution	1′ or 0.01° (switchable)			
	Mechanism	Fine feed and clamp			
	Cross-hairs	90° (solid lines)			
Projection lens	Magnification	10X (standard accessory), 5X, 20X, 50X, 100X, All lens have the same focus. Half-mirror for the coaxial surface illumination are built-in and movable.			
	Lens mount	Bayonet mount, 3-lens mount turret type			
Illumination	Contour illumination	Halogen bulb (24 V, 150 W, 50 hours) (**515530**), Variable Illumination angle (Coaxial surface/Oblique reflected, Beam concentration and adjustment), Built-in heat-absorbing filter, Built-in cooling fan, Stepless brightness adjustment, Soft lighting (inrush current reduction)			
	Surface illumination	Halogen bulb (24 V, 150 W, 50 hours) (**515530**) Zoom Telecentric system, Heat absorbing filter, Built-in cooling fan, Stepless brightness adjustment, Soft lighting (inrush current reduction), Bulb sliding mechanism			
Resolution for X/Y counter*2		0.001 mm/0.0001 in			
Measuring unit		High-accuracy digital scale			
Measuring range (X×Y)		100×100 mm	200×100 mm	200×170 mm	300×170 mm
Measuring accuracy*3		±(3.0 + 0.02L) µm L=Measured length (mm)			

*1 To denote your AC power cable add the following suffixes to the order No.: A for UL/CSA, D for CEE, DC for CCC, E for BS, K for KC, C and No suffix is required for PSE.
*2 0.5 µm or 0.1 µm resolution is also available. Please contact Mitutoyo Techno Service Business Division.
*3 Measuring method complies with JIS B 7184.

Mitutoyo reserves the right to change any or all aspects of any product specification, including prices, designs and service content, without notice.

MeasurLink® ENABLED
Data Management Software by Mitutoyo

PV-5110
SERIES 304 — Profile Projectors

- Floor-standing projector with a vertical axis and a unique forward-sloping screen.
- The large 500 mm diameter screen enables the whole of a 100 mm diameter workpiece to be inspected using a 5X projection lens without needing to move the workpiece.

- The sloping screen design enables the operator to maintain a comfortable operational posture for long periods of time while making comparative measurements or tracing a projected image.



PV-5110

SPECIFICATIONS

Model No.		PV-5110
Order No.		**304-919**[*1]
Projected image		Inverted-reversed
Protractor screen	Effective diameter	ø508 mm (20 in)
	Screen rotation	±360° (±370° for display)
	Angle display	Digital counter (ABS/INC mode switching, Zero Set)
	Resolution	1′ or 0.01° (switchable)
	Mechanism	Fine feed and clamp
	Cross-hairs	90° (solid lines)
	Zero-base index	Built-in, With a LED back light
Projection lens	Magnification	10X (standard accessory), 5X, 20X, 50X, 100X
Illumination	Contour illumination	Halogen bulb (24 V, 150 W, 500 hours) (**512305**), 2-step (High/Low) brightness switch, Combination use with a color filter available
	Surface illumination	Double-lighting oblique surface illumination unit (optional), Halogen bulb (24 V, 150 W, 500 hours) (**512305**), 2-step (High/Low) brightness switch
Resolution for X/Y counter[*2]		—
Measuring unit		Digital scale
Measuring range (XxY)		200×100 mm (164×68 mm[*3])

*1 To denote your AC power cable add the following suffixes to the order No.: A for UL/CSA, D for CEE, DC for CCC, E for BS, K for KC, C and No suffix is required for PSE.
*2 X and Y counters are not built into the **PV-5110** main unit. If a counter display is required, it is recommended that a **QM-Data200** or **KA-212** is purchased separately.
*3 The range where no shading is observed using a 5X projection lens with contour illumination.

MeasurLink® ENABLED
Data Management Software by Mitutoyo

PH-3515F
SERIES 172 — Profile Projector

- Standard models as used in the machine tool industry. Best for observation and measurement of cutting tools (end mills, lathe tools).
- The stage has a higher loading capacity (45 kg) than any other type of projector.

- Unique projector employing horizontal optical system. The optical axis and the stage are parallel, and the workpiece can be easily removed.



PH-3515F

SPECIFICATIONS

Model No.		PH-3515F
Order No.		**172-868**[*1]
Projected image		Erect-reversed
Protractor screen	Effective diameter	ø353 mm (13.9 in)
	Screen rotation	±360° (±370° for display)
	Angle display	Digital counter (ABS/INC mode switching), Zero Set
	Resolution	1′ or 0.01° (switchable)
	Mechanism	Fine feed and clamp
	Cross-hairs	90° (solid lines)
Projection lens	Magnification	10X (standard accessory), 5X, 20X, 50X, 100X
Illumination	Contour illumination	Halogen bulb (24 V, 150 W, 500 hours) (**515530**), 2-step (High/Low) brightness switch, Combination use with a color filter available
	Surface illumination (oblique)	Parabolic halogen bulb (24 V, 200 W, 50 hours) (**12BAA637**) Beam concentration and adjustment available, Heat-absorbing filter, Built-in cooling fan
Resolution for X/Y counter[*2]		—
Measuring unit		Digital scale
Measuring range (XxY)		254×152 mm

*1 To denote your AC power cable add the following suffixes to the order No.: A for UL/CSA, D for CEE, DC for CCC, E for BS, K for KC, C and No suffix is required for PSE.
*2 XY counter is not built in the main unit of the **PH-3515F**.
If a counter display is required, it is recommended to purchase the **QM-Data200** or a counter (**KA-212**) separately.
Note: Depending on the angle of illumination, measurement results may be smaller than actual values.

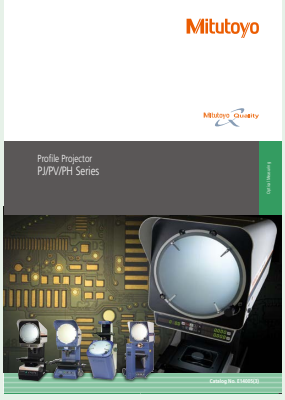

Refer to the Profile Projector Brochure (**E14005**) for more details.

Mitutoyo reserves the right to change any or all aspects of any product specification, including prices, designs and service content, without notice.

Erect Image and Inverted Image

An image of an object projected onto a screen is erect if it is orientated the same way as the object on the stage. If the image is reversed top to bottom, left to right and by movement with respect to the object on the stage (as shown in the figure below) it is referred to as an inverted image (also known as a reversed image).

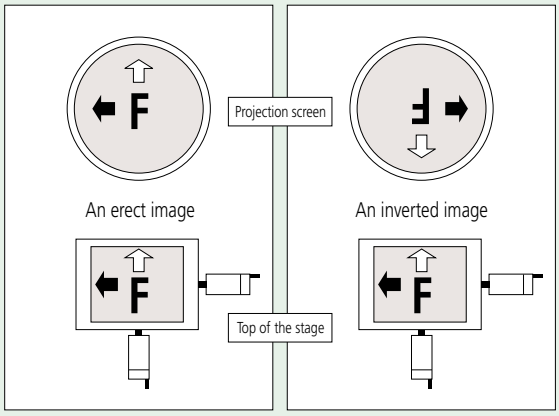

F Workpiece
⬅ X-axis movement
⇦ Y-axis movement

Magnification Accuracy

The magnification accuracy of a projector when using a certain lens is established by projecting an image of a reference object and comparing the size of the image of this object, as measured on the screen, with the expected size (calculated from the lens magnification, as marked) to produce a percentage magnification accuracy figure, as illustrated below. The reference object is often in the form of a small, graduated glass scale called a `stage micrometer' or `standard scale', and the projected image of this is measured with a larger glass scale known as a `reading scale'.

(Note: That magnification accuracy is not the same as measuring accuracy.)

$$\Delta M\,(\%) = \frac{L - \ell M}{\ell M} \times 100$$

ΔM (%): Magnification accuracy expressed as a percentage of the nominal lens magnification
L : Length of the projected image of the reference object measured on the screen
ℓ : Length of the reference object
M : Magnification of the projection lens

Type of Illumination

- Contour illumination: An illumination method to observe a workpiece by transmitted light and is used mainly for measuring the magnified contour image of a workpiece.
- Coaxial surface illumination: An illumination method whereby a workpiece is illuminated by light transmitted coaxially to the lens for the observation/measurement of a surface. (A half-mirror or a projection lens with a built-in half-mirror is needed.)
- Oblique surface illumination: A method of illumination by obliquely illuminating the workpiece surface. This method provides an image of enhanced contrast, allowing it to be observed three-dimensionally and clearly. However, note that an error is apt to occur in dimensional measurement with this method of illumination.
  (An oblique mirror is needed. **PJ-H30** models are supplied with an oblique mirror.)

Telecentric Optical System

An optical system based on the principle that the primary rays are aligned parallel to the optical axis by placing a lens stop on the focal point on the image side. Its functional feature is that the image will not vary in size even though the image blurs as the object is shifted along the optical axis.

For measuring projectors and measuring microscopes, an identical effect is obtained by placing a lamp filament at the focal point of a condenser lens instead of a lens stop so that the object is illuminated with parallel beams. (See the figure below.)

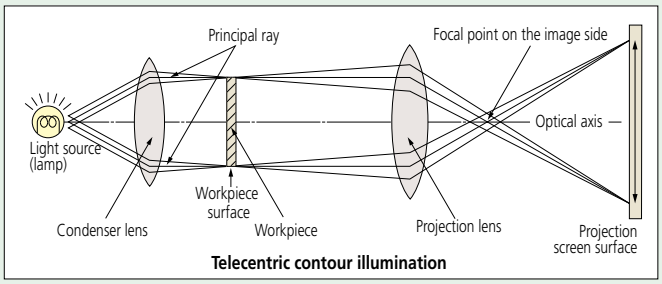

Telecentric contour illumination

Working distance

Refers to the distance from the face of the projection lens to the surface of a workpiece in focus. It is represented by L in the diagram below.

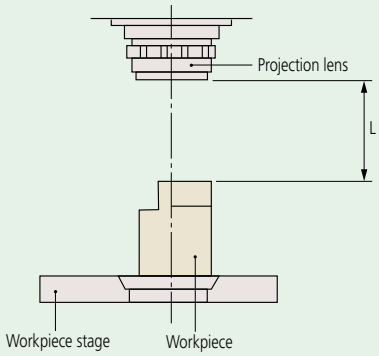

Parallax error

This is the displacement of an object against a fixed background caused by a change in the observer's position and a finite separation of the object and background planes. Can cause a reading error on a projector screen.

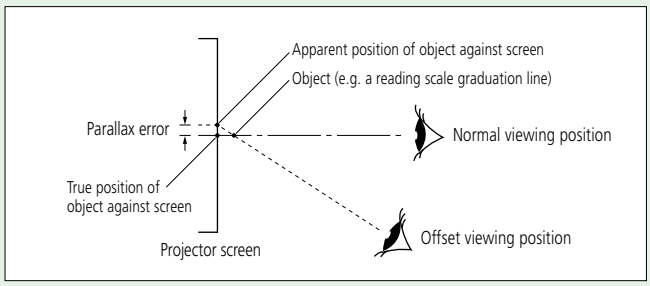

Field of view diameter

The maximum diameter of the workpiece that can be projected using a particular lens.

$$\text{Field of view diameter (mm)} = \frac{\text{Screen diameter of profile projector (mm)}}{\text{Magnification of projection lens used}}$$

Example: If a 5X magnification lens is used for a projector with a screen of ø500 mm:
Field of view diameter is given by $\frac{500\text{ mm}}{5} = 100\text{ mm}$

MeasurLink® ENABLED
Data Management Software by Mitutoyo

MF
SERIES 176 — Measuring Microscopes

- An easy-to-operate standard measuring microscope using specially designed long working distance **ML** objectives.
- Measuring accuracy is the highest in its class (and conforms to JIS B 7153).
- Illumination can be selected from an LED unit, which has a longer life, or a powerful halogen unit for high-magnification applications.
- Excellent usability, a high-NA and long working distance objectives enable effective observation.

Manual type

- Stages range in size from 100×100 mm to 400×200 mm.
- The XY stage is equipped with a quick-release mechanism that enables switching between coarse and fine feed to provide swift and precise stage movement, even over a large distance.



MF-B2017D
Note: The binocular tube (eyepiece) and illumination unit are optional accessories.

SPECIFICATIONS

Without Z-axis scale	Model No.	**MF-A1010D**	**MF-A2010D**	**MF-A2017D**	**MF-A3017D**	**MF-A4020D**
	Order No.	**176-861**[*1]	**176-862**[*1]	**176-863**[*1]	**176-864**[*1]	**176-865**[*1]
With Z-axis scale	Model No.	**MF-B1010D**	**MF-B2010D**	**MF-B2017D**	**MF-B3017D**	**MF-B4020D**
	Order No.	**176-866**[*1]	**176-867**[*1]	**176-868**[*1]	**176-869**[*1]	**176-870**[*1]
Observation image		BF (Bright-field)/Erect image				
Eyepiece with diopter adjustment		10X (eyepiece field number: 24), 15X, 20X Note: Monocular - one 10X eyepiece provided as standard; Binocular - two 10X eyepieces provided as standard				
Objective		**ML** objective 3X (provided as standard), 1X, 5X, 10X, 20X, 50X, 100X				
Illumination unit (One of the two options must be selected.)	LED illumination unit	Transmitted illumination: Telecentric system, Built-in aperture diaphragm, White LED light source, stepless light intensity control with cooling fan Reflected illumination: Koehler illumination, Variable aperture diaphragm mechanism, White LED light source, stepless light intensity control Control unit: Power ON/OFF switch (main switch), AC100 to 240 V power input connector				
	Halogen illumination unit	Transmitted illumination: Telecentric system, Built-in aperture diaphragm, Halogen bulb (50 W), stepless light intensity control, With cooling fan Reflected illumination: Koehler illumination, Variable aperture diaphragm mechanism, Halogen bulb (50 W), stepless light intensity control, With cooling fan Control unit: Power ON/OFF switch (main switch), AC100 to 240 V power input connector				
Stage	Measuring range	100×100 mm	200×100 mm	200×170 mm	300×170 mm	400×200 mm
	Quick-release mechanism	Provided as standard for the X and Y axes				
	Zero-set button	Provided as standard for the X and Y axes (and for the Z axis only for the **MF-B** type)				
Z axis	Max. workpiece height	150 mm		220 mm		
	Feed mechanism	Coaxial coarse and fine feed, handles on both sides (coarse: 30 mm/rotation, fine: 0.2 mm/rotation)				
Measuring accuracy[*2] (X and Y axes, when not loaded)		(2.2 + 0.02L) µm L=measuring length (mm)				
Digital display	Resolution	1/0.5/0.1 µm 0.0001/0.00005/0.00001 in (switchable)				
	Display axes	X and Y (or X, Y, and Z only for the **MF-B** type)				
	Functions	Zero-setting, direction switching, RS-232C output, USB output (specific to **QSPAK**)				

*1 The following suffixes are added to the order No.to specify the User Manual's language: -10 for English; -11 for Simplified Chinese; No suffix for Japanese.
*2 Measuring method complies with JIS B 7153.

Motor-Driven Z-axis

- Freedom from burdensome focus adjustment even on a workpiece with many asperities allows the operator to perform stress-free measurement.
- Using the Vision Unit (optional) enables the image AF function.



MF-J2017D
Note: The binocular tube (eyepiece) and illumination unit are optional accessories.

SPECIFICATIONS for Motor-Driven Z-axis MF models

Model No.		**MF-J2017D**	**MF-J3017D**	**MF-J4020D**
Order No.		**176-891**[*1]	**176-892**[*1]	**176-893**[*1]
Vision AF[*2]		Available		
Stage	Quick release mechanism	Fitted to X and Y axes		
	Zero set switch	Fitted to X and Y axes		
Z axis	Max. workpiece height	220 mm		
	Feed mechanism	Motordrive (Maximum measuring speed: 20 mm/s)		

*1 To denote your AC power cable add the following suffixes to the order No.: A for UL/CSA, D for CEE, DC for CCC, E for BS, K for KC, C and No suffix is required for PSE.
*2 Vision Unit and an image AF cable are separately required.
Note: The specification other than the above is subject to the **MF** Series.



Refer to the **MF**/**MF-U** Series Brochure (**E14003**) for more details.

Mitutoyo reserves the right to change any or all aspects of any product specification, including prices, designs and service content, without notice.

Mitutoyo

MeasurLink® ENABLED
Data Management Software by Mitutoyo

MF-U
SERIES 176 — Universal Measuring Microscopes

- Integration of metallurgical and measurement microscope functions provides high-resolution observation and a high-accuracy measurement solution.
- Measuring accuracy is the highest in its class (and conforms to JIS B 7153).
- Illumination can be selected from an LED unit, which has a longer life, or a powerful halogen unit for high-magnification applications.
- Excellent usability, a high-NA and long working distance objectives enable effective observation.



MF-UB2017D
Note: The turret, objectives and illumination unit are optional accessories.

Manual type

- Stages range in size from 100×100 mm to 400×200 mm.
- The XY stage is equipped with a quick-release mechanism that enables switching between coarse and fine feed to provide swift and precise stage movement, even over a large distance.

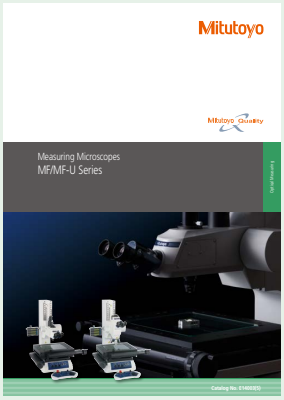

Refer to the **MF/MF-U** Series Brochure (**E14003**) for more details.

SPECIFICATIONS

BF (Bright-field)	Without Z-axis scale	Model No.	**MF-UA1010D**	**MF-UA2010D**	**MF-UA2017D**	**MF-UA3017D**	**MF-UA4020D**
		Order No.	**176-871***1	**176-872***1	**176-873***1	**176-874***1	**176-875***1
	With Z-axis scale	Model No.	**MF-UB1010D**	**MF-UB2010D**	**MF-UB2017D**	**MF-UB3017D**	**MF-UB4020D**
		Order No.	**176-876***1	**176-877***1	**176-878***1	**176-879***1	**176-880***1
BD (Bright-field/ Dark-field)	Without Z-axis scale	Model No.	**MF-UC1010D**	**MF-UC2010D**	**MF-UC2017D**	**MF-UC3017D**	**MF-UC4020D**
		Order No.	**176-881***1	**176-882***1	**176-883***1	**176-884***1	**176-885***1
	With Z-axis scale	Model No.	**MF-UD1010D**	**MF-UD2010D**	**MF-UD2017D**	**MF-UD3017D**	**MF-UD4020D**
		Order No.	**176-886***1	**176-887***1	**176-888***1	**176-889***1	**176-890***1
Observation image			BF (Bright-field), DF (Dark-field) (**MF-UC** and **MF-UD** models only), Polarization, Differential Interference Contrast (DIC)/Erect image				
Eyepiece (optional) with diopter adjustment			10X (eyepiece field number: 24, two eyepieces provided as standard), 15X, 20X				
Turret (required)	Bright-field (BF)		Manual/Motor (select either one)				
	Bright-field/dark-field (BD)						
Objective (optional)	Bright-field (BF)		**M Plan Apo**, **M Plan Apo HR**, **M Plan Apo SL**, **G Plan Apo**				
	Bright-field/dark-field (BD)		**BD Plan Apo**				
Illumination unit (One of the two options must be selected.)	LED illumination unit		Transmitted illumination: Telecentric system, Built-in aperture diaphragm, White LED light source, stepless light intensity control, With cooling fan Reflected illumination: Koehler illumination, Variable aperture diaphragm mechanism, White LED light source, stepless light intensity control Control unit: Power ON/OFF switch (main switch), AC100 to 240 V power input connector				
	Halogen illumination unit		Transmitted illumination: Telecentric system, Built-in aperture diaphragm, Halogen bulb (50 W), stepless light intensity control, With cooling fan Reflected illumination: Koehler illumination, Variable aperture diaphragm mechanism, 100 W or 150 W halogen bulb (selectable), external fiber-optic illumination, stepless light intensity control Control unit: Power ON/OFF switch (main switch), AC100 to 240 V power input connector				
Stage	Measuring range		100×100 mm	200×100 mm	200×170 mm	300×170 mm	400×200 mm
	Quick-release mechanism		Provided as standard for the X and Y axes				
	Zero-set button		Provided as standard for the X and Y axes (and for the Z axis only for the **MF-UB** and **-UD** types)				
Z axis	Max. workpiece height		150 mm		220 mm		
	Feed mechanism		Coaxial coarse and fine feed, handles on both sides (coarse: 10 mm/rotation, fine: 0.1 mm/rotation)				
Measuring accuracy*2 (X and Y axes, when not loaded)			(2.2 + 0.02L) µm L=measuring length (mm)				
Digital display	Resolution		1/0.5/0.1 µm 0.0001/0.00005/0.00001 in (switchable)				
	Display axes		X and Y (or X, Y, and Z only for the **MF-UB** and **-UD** types)				
	Functions		Zero-setting, direction switching, RS-232C output, USB output (specific to **QSPAK**)				

*1 The following suffixes are added to the order No.to specify the User Manual's language: -10 for English; -11 for Simplified Chinese; No suffix for Japanese.
*2 Measuring method complies with JIS B 7153.

Mitutoyo reserves the right to change any or all aspects of any product specification, including prices, designs and service content, without notice.

Motor-Driven Z-axis

- Freedom from burdensome focus adjustment even on a workpiece with many asperities allows the operator to perform stress-free measurement.
- Using Vision Unit (optional) enables the image AF function.



MF-UJ2017D
Note: The turret, objectives and illumination unit are optional accessories.

J

SPECIFICATIONS for Motor-Driven Z-axis MF-U models

BF (Bright-field)		Model No.	**MF-UJ2017D**	**MF-UJ3017D**	**MF-UJ4020D**
		Order No.	**176-894**[*1]	**176-895**[*1]	**176-896**[*1]
BD (Bright-field/Dark-field)		Model No.	**MF-UK2017D**	**MF-UK3017D**	**MF-UK4020D**
		Order No.	**176-897**[*1]	**176-898**[*1]	**176-899**[*1]
Eyepiece (optional) with diopter adjustment			10X (eyepiece field number: 24, two eyepieces provided as standard), 15X, 20X		
Objective (optional)	Bright-field (BF)		**M Plan Apo**, **M Plan Apo HR**, **M Plan Apo SL**, **G Plan Apo**		
	Bright-field/dark-field (BD)		**BD Plan Apo**		
Vision AF[*2]			Available		
Stage	Measuring range		200×170 mm	300×170 mm	400×200 mm
	Quick release mechanism		Fitted to X and Y axes		
	Zero set switch		Fitted to X and Y axes		
Z axis	Max. workpiece height		220 mm		
	Feed mechanism		Motor drive (measuring speed: max. 20 mm/s)		
Measuring accuracy[*3] (X and Y axes, when not loaded)			(2.2 + 0.02L) µm L=measuring length (mm)		
Digital display	Resolution		1/0.5/0.1 µm 0.0001/0.00005/0.00001 in (switchable)		
	Display axes		X, Y and Z		
	Functions		Zero-setting, direction switching		

*1 To denote your AC power cable add the following suffixes to the order No.: A for UL/CSA, D for CEE, DC for CCC, E for BS, K for KC, C and No suffix is required for PSE.
*2 Vision Unit and an image AF cable are separately required.
*3 Measuring method complies with JIS B 7153.
Note: For all specifications not included above see page J-7.

MeasurLink® ENABLED
Data Management Software by Mitutoyo

Hyper MF/MF-U
SERIES 176 — High-Accuracy Measuring Microscopes

- Ultra-high accuracy measuring microscopes achieving (0.9 + 3L/1,000) µm of accuracy.
- Three-axis motorized front operation joystick control, which makes a refreshing change from conventional microscope operation, allows fine positioning even during fast movement.
- Large workstage with stroke of 250×150 mm provides enough margin for the measurement of larger workpieces.
- The Vision Unit can be integrated to provide an effective and stable measurement environment.



Hyper MF-U
Note: The optical tube, turret, and objectives are optional.

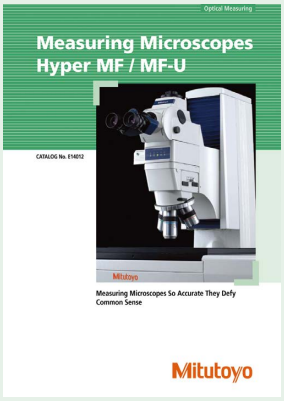

Refer to the Hyper **MF**/**MF-U** Brochure (**E14012**) for more details.

J

SPECIFICATIONS

Model No.		HyperMF-B2515B	HyperMF-UB2515B	HyperMF-UD2515B	HyperMF-UE2515B	HyperMF-UF2515B
Order No.		176-430*1	176-431*1	176-432*1	176-433*1	176-434*1
Optical tube		Finite correction optical system BF (Bright-field)	Infinity-correction optical system BF (Bright-field)	Infinity-correction optical system BD (Bright/Dark-field)	Infinity-correction optical system BF (Bright-field) with the LAF function	Infinity-correction optical system BD (Bright/Dark-field) with the LAF function
	Standard reticle (Built-in)	90° broken-cross line (line width 5 µm)				
	Pupil distance adjustment	Siedentopf type Adjustment range: 51 to 76 mm				
	Optical path switching ratio	Observation/TV-photomicrography=50/50				
	Vertical tilt angle	25°	Tilting			
	TV port	Provided as standard				
Observation image		Erect image				
Eyepiece	Magnification	10X, 15X, 20X				
Objective (optional)		Selectable from the monocular unit (equipped with one eyepiece) or binocular tube (equipped with two eyepieces)	Equipped with two 10X eyepieces			
	ML Series objective	1X, 3X, 5X, 10X, 20X, 50X, 100X	—			
	BF (Bright-field)	—	**M Plan Apo**, **M plan Apo SL**, **G plan Apo**			
	BD (Bright/Dark-field)	—	**BD Plan Apo**			
Turret (optional)	BF (Bright-field)	—	(Equipped with a four-hole manual turret/motorized five-hole turret*2)			
	BD (Bright/Dark-field)	—	(Equipped with a four-hole manual turret/motorized four-hole turret*3)			
Focusing section	Maximum height of workpiece	150 mm				
	Measuring accuracy	(1.5 + 10L/1000) µm L=Measuring length (mm)				
	Drive method	Motorized control using a joystick				
Illumination unit	Transmitted illumination device	Telecentric system, Built-in aperture diaphragm, Halogen bulb (50 W), 100-step light intensity control, Fiber-optic cable cold light illumination				
	Reflected illumination unit	Koehler illumination, Variable aperture diaphragm mechanism, Halogen bulb (100 W), 100-step light intensity control, Fiber-optic cable cold light illumination				
Workstage	Measuring range (X×Y)	250×150 mm				
	Measuring accuracy*4 (When no load is put on the X or Y axis)	(0.9 + 3L/1000) µm L=Measuring length (mm)				
	Dimensions of the top plane	460×350 mm				
	Usable dimensions of the stage glass	300×200 mm				
	Swiveling angle	±3°				
	Maximum loading mass	30 kg				
	Drive method	Motorized control using a joystick				
Detector		High precision digital scale (Patented)				
Digital display	Resolution	0.01 µm				
	Axes to be displayed	X, Y, Z				
	Data processing unit	Vision Unit (required)				
Operation section	LAF (just focus)	—	—		Available	
	LAF (tracking focus)	—	—		Available	

*1 To denote your AC power cable add the following suffixes to the order No.: A for UL/CSA, D for CEE, DC for CCC, E for BS, K for KC, C and No suffix is required for PSE.
*2 and *3 are factory-installed options.
*4 Measurement accuracy complies with JIS B 7153.

Mitutoyo reserves the right to change any or all aspects of any product specification, including prices, designs and service content, without notice.

MeasurLink® ENABLED
Data Management Software by Mitutoyo

TM
SERIES 176 — Toolmakers' Microscopes

- Compact universal toolmakers' microscope that can be installed on any site.
- Newly designed LED illuminators provide enhanced observation for higher accuracy and resolution.
- Optional LED circular illuminator available for applications requiring all-round lighting.
- Achieves a maximum measuring height of 115 mm despite the compact size.
- Installation of Digimatic micrometer heads (**164-163**, optional) makes measurement easy and precise.
- A vernier scale (Angle Index) built into the eyepiece mount enables accurate angular measurements.
- Lenses are available for a wide range of magnifications (20X to 200X in total).

Angle Index (Standard Accessory)

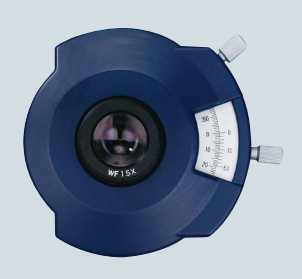



TM-505B



TM-1005B

Note: Micrometer heads are optional.

SPECIFICATIONS

Model No.		TM-505B	TM-1005B
Order No.		176-818	176-819
Optical tube		Monocular type (Vertical tilt angle: 30°)	
Observation image		Erect	
Eyepiece protractor		Resolution (graduation): 1°, Rotation angle: 360°, Resolution (angle): 6', Adjustable zero point	
Eyepiece		Standard accessory: 15X (field number: 13), Options: 10X, 20X	
Objective		Standard accessory: 2X, Optional: 5X, 10X	
Microscope head	Maximum height of workpiece	115 mm	107 mm
	Focusing method	Manual (Coarse feed)	
Illumination unit	Transmitted illumination	Stepless brightness adjustment, White LED light source with green filter	
	Reflected illumination	Oblique single-source type, Stepless brightness adjustment, White LED light source	
Cross-travel stage	Measuring range	50×50 mm	100×50 mm (An optional 50 mm gauge block is required to cover full range. A CERA block is recommended.)
	Table size	152×152 mm	240×152 mm
	Usable area of the stage glass	96×96 mm	154×96 mm
	Maximum stage glass loading	5 kg	
Linear measurement method		Micrometer head*	
Resolution		Depends on the micrometer head specifications* (for **164-163**: 0.001 mm)	
Micrometer head travel range		For **164-163**: 50 mm	
Power supply		AC100 to 240 V 50/60 Hz Maximum power consumption: 4.2 W	
Main unit mass		14 kg	15 kg

* Micrometer heads are optional for **TM-505B** and **TM-1005B**.
Note: The main unit with Digimatic micrometer head (**164-164**) is provided in the **TM** Series.
TM-A505B (**176-820A**)
TM-A1005B (**176-821A**)
Other specifications are the same as the other **TM** Series.

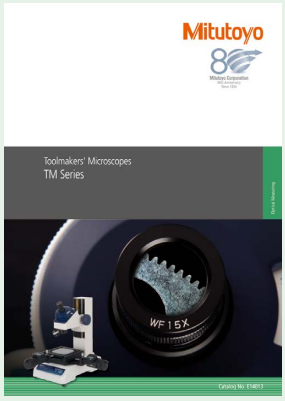

Refer to the **TM** Series Brochure (**E14013**) for more details.

Mitutoyo reserves the right to change any or all aspects of any product specification, including prices, designs and service content, without notice.

Mitutoyo

MeasurLink® ENABLED
Data Management Software by Mitutoyo

Vision Unit
SERIES 359 — Vision System Retrofit for Microscopes

- The measurement tools and various macro icons allow measurement in one easy step.
- The graphics and measurement navigation functions facilitate operation.
- The image saving function and the data output function to the spreadsheet software are standard.
- Combined use with the **MF**/**MF-U** Series (Motor-Driven Z-axis) achieves the image AF (auto focus) function.



MF-J2017D plus Vision Unit



Foot switch
12AAJ088

SPECIFICATIONS

Model	**Vision Unit**
Order No.	**359-763**
Magnification of the optical system	When installed on the microscope 0.5X (using the 0.5X TV adapter)
Image detection	High-sensitivity 1/2 inch color CMOS camera 3 megapixel
Resolution	0.1 µm
Accuracy (Measurement environment: 20 °C)	Depends on the accuracy specification of the Mitutoyo measuring microscope to which the unit is fitted. For reference: When using an **ML** Series 3X objective (In an inspection using a sample workpiece based on the Mitutoyo standards) Measurement accuracy in the screen: Within ±2.5 µm Repetitive accuracy in the screen (±2σ): Within ±1 µm
Software (optional)	**QSPAK VUE**

Note: Software (**QSPAK VUE**) and calculation processor are required separately.

Applicable Models

Mitutoyo **MF** Series, **MF-U** Series, **Hyper MF** Series, **Hyper MF-U** Series



Refer to the **QM-Data200** and Vision Unit Brochure (**E14008**) for more details.

Mitutoyo reserves the right to change any or all aspects of any product specification, including prices, designs and service content, without notice.

MeasurLink® ENABLED
Data Management Software by Mitutoyo

QM-Data200
SERIES 264 — 2D Data Processing Unit

- 2D Data Processor designed to perform arithmetic processing of XY coordinate data acquired from projectors and measuring microscopes for local display or output to a printer.
- Informative color-graphic displays on the large LCD screen make for easy measurement operations.
- The AI measurement function (automatic identification of measuring item) eliminates switching between the measurement command keys.
- Equipped with a measurement procedure teaching function and measuring position navigation in Repeat mode.
- The user menu function allows users to register measurement commands or part programs to create their own menus.
- Measurement result output to CSV format in spreadsheet software.
- Measurement procedures and calculation results can be saved on a USB-compatible memory device.



QM-Data200
(stand type)



Foot switch
12AAJ088

J

SPECIFICATIONS

Model No.	QM-Data200		
Order No.	Stand type **264-155***1	Flexible arm type **264-156***1	Stand type **264-159***1
Applicable models (Conventional models)*2	**PJ-PLUS** Series **PJ-H30** Series **PV-5110** **PH-3515F** **MF** Series **MF-U** Series	**PJ-PLUS** Series **PJ-H30** Series **PV-5110***3 **PH-3515F***3	**Hyper MF/MF-U**
Unit of measurement	Length: mm Angle: Switchable between decimal degree and sexagesimal notation		
Resolution	0.1 µm		0.01 µm
Program function	Creating, performing, and editing of measurement procedures		
Statistical processing	Number of data, maximum value, minimum value, mean value, standard deviation, range, histogram, Statistics classified by each measurement function (Statistics classified by each command)		
Display unit	Color graphic LCD (equipped with LED backlight)		
ABS point	—		Available (Automatic movement)
LAF (Laser AF)	—		Available
Edge sensor position correction	Available (Profile Projectors with OPTOEYE 200)		—
Input/output	XYZ: Data input from linear scales (Maximum number of axes: 3) RS-232C 1: Connection to an external PC RS-232C 2: Connection to a measuring unit counter OPTOEYE: Connection to an OPTOEYE edge signal (OPTOEYE 200) FS: For the connection to the foot switch PRINTER: For the connection to an external printer USB-MEMORY: For the connection to a USB memory		
Measurement result file output	RS-232C output (CSV format, MUX-10 format)		
Display language	16 languages (Japanese, English, German, French, Italian, Spanish, Portuguese, Czech, Chinese (simplified/traditional), Korean, Turkish, Swedish, Polish, Dutch, Hungarian)		
Power supply	AC100 to 240 V		
Maximum power consumption	17 W (excluding optional accessories)		
External dimensions (W×H×D)	260×242×310 mm (including the stand section)	318×153×275 mm (when the arm is horizontal)	260×242×310 mm (including the stand section)
Mass	Approx. 2.9 kg	Approx. 2.8 kg	Approx. 2.9 kg
Standard Accessories	AC adapter, Power cable, Quick Operation Guide		

*1 To denote your AC power cable add the following suffixes to the order No.: A for UL/CSA, D for CEE, E for BS, K for KC, C and No suffix is required for PSE, and 00 for power cord other than A, D, E, K, C, No suffix.
*2 Please contact Mitutoyo sales office with respect to the models that are applicable to the models other than mentioned above.
*3 The flexible arm type cannot be used concurrently with a counter stand.

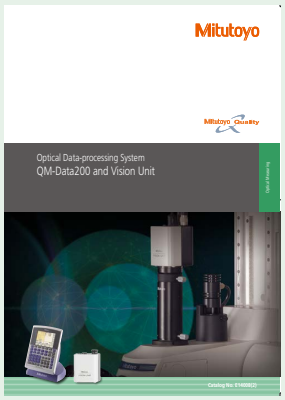

Refer to the **QM-Data200** and Vision Unit Brochure (**E14008**) for more details.

Mitutoyo reserves the right to change any or all aspects of any product specification, including prices, designs and service content, without notice.

Mitutoyo

FS70
SERIES 378 — Microscope Unit for Semiconductor Inspection

- Compact microscope unit equipped with an eyepiece observation section.
- Can be used with YAG (near-infrared, visible, near-ultraviolet, or ultraviolet) lasers.*1

*1 The performance and safety of laser-equipped system products is not guaranteed.

- Usable in infrared optical systems*2. Applications: observation of silicon wafers; spectral characteristics analysis using infrared.

*2 An infrared source and infrared camera are necessary.

- Models supporting BF (Bright-field), DF (Dark-field), Polarization, and Differential Interference Contrast (DIC) are available.
- The inward-facing turret and long working distance objectives maintain the high operability of the microscope.



FS70Z



FS70L4

Note: The parfocal manual turret, eyepieces and objectives are optional.

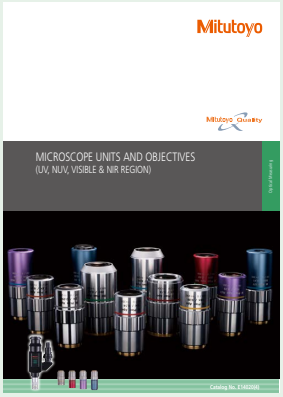

Refer to the Microscope Units and Objectives Brochure (**E14020**) for more details.

J

SPECIFICATIONS

Standard head type	Model No.	**FS70**	—	**FS70Z**	—	**FS70ZD**	**FS70L**	**FS70L4**
	Order No.	**378-184-1**	—	**378-185-1**	—	Made-to-order	**378-186-1**	**378-187-1**
Tilting head type	Model No.	—	**FS70-TH**	—	**FS70Z-TH**	**FS70ZD-TH**	**FS70L-TH**	**FS70L4-TH**
	Order No.	—	**378-184-3**	—	**378-185-3**	Made-to-order	**378-186-3**	**378-187-3**
Focus adjustment		50 mm travel range with concentric coarse (3.8 mm/rev) and fine (0.1 mm/rev) focusing wheels (right/left)						
Observation image		Erect image						
	BF (Bright-field)	✔	✔	✔	✔		✔	✔
	BD (Bright-field/Dark-field)					✔		
	Polarization	✔	✔	✔	✔	✔	✔	✔
	Differential Interference Contrast (DIC)	✔	✔	✔	✔	✔		
Optical tube type		Siedentopf, adjustable interpupillary distance range: 51 to 76 mm						
Field number		24 mm						
Tilt angle		0 to 20°, displacement of eye point: 114 mm (only for tilting head type)						
Optical pass ratio		Fixed type (Eyepiece/TV=50/50)	Switchable type (Eyepiece/Tube=100/0: 0/100)	Fixed type (Eyepiece/TV=50/50)	Switchable type (Eyepiece/Tube=100/0: 0/100)	Fixed type*1 (Eyepiece/TV=50/50)	Switchable type (Eyepiece/Tube=100/0: 0/100)	
Protective filter		—					Built-in laser beam filter	
Tube lens		1X		1X to 2X zoom			1X	
Applicable laser		—					1064/532/355 nm	532/266 nm
Camera mount		C-mount (using optional adapter B*2)					Use a laser with TV port.	C-mount receptacle (with green filter switch)
Optical system epi-illumination		Epi-illumination for Bright-field (Koehler illumination, with aperture diaphragm)						
Illumination unit (optional)		Fiber-optic illumination unit (100 W), stepless adjustment, light guide length: 1.5 m						
Objective, optional (for observation)		**M Plan Apo/HR/SL, G Plan Apo**				**BD Plan Apo**	**M Plan Apo/HR/SL, G Plan Apo**	
Objective, optional (for laser-cutting)		—					**NIR** Series **NUV** Series	**UV** Series
Loading*3		14.5 kg	13.6 kg	14.1 kg	13.2 kg	14.1 kg (tilting head type: 13.2 kg)	14.2 kg (tilting head type: 13.5 kg)	13.9 kg (tilting head type: 13.1 kg)
Mass (main unit)		6.1 kg	7.1 kg	6.6 kg	7.5 kg	6.6 kg (tilting head type: 7.5 kg)	6.4 kg (tilting head type: 7.2 kg)	6.7 kg (tilting head type: 7.5 kg)

*1 It is a switchable type when using **FS70ZD-TH** (Tilting head type).
*2 Installation is optional.
*3 Loading on optical tube excluding weight of objectives and eyepieces
Note: Observe the following precautions when using **FS70L** or **FS70L4** with YAG laser source attached.
· Be aware of the laser power and energy density limitations of the optical system to avoid damage.
· Check the mass of the laser source. When mounting on a high-speed device or acceleration/deceleration device, please contact us.

Mitutoyo reserves the right to change any or all aspects of any product specification, including prices, designs and service content, without notice.

VMU
SERIES 378 — Microscope unit for incorporating in Equipment

- Compact and lightweight microscope designed to be built in for camera observation
- Can be used with YAG (near-infrared, visible, near-ultraviolet, or ultraviolet) lasers.*1

*1 The performance and safety of laser-equipped system products is not guaranteed.

- For **VMU-LB** and **VMU-L4B**, the rigidity and general performance of the microscope main unit have been enhanced compared with previous models.
- Compatible with infrared optical systems*2

*2 An infrared source and infrared camera are necessary.

- Telecentric system equipped with an aperture diaphragm is standard on the epi-illumination optical system.
- Best suited to process images for which uniform illumination is required.
- Design and manufacture are flexible to meet your demands such as double camera mounting or double (low/high) magnification.


VMU-V


VMU-H


VMU-LB


VMU-L4B

SPECIFICATIONS

Model No.		VMU-V	VMU-H	VMU-LB	VMU-L4B
Order No.		378-505	378-506	378-513	378-514
Camera mounting direction		Vertical	Horizontal	Vertical (Rotatable)	
Observation		Bright-field/Erect image	Bright-field/Inverted image	Bright-field/Erect image	
Optical tube	TV adapter	Equipped with a C-mount			Equipped with a C-mount (Equipped with a green filter switching mechanism)
	Image forming (tube) lens	Built-in 1X (visible/near-infrared calibration)		Built-in 1X (near-infrared/visible/ near-ultraviolet calibration)	Built-in 1X (ultraviolet/visibility compensation)
	Available for lasers	—		YAG laser source (Fundamental, Second/Third harmonic) mountable	YAG laser source (Second/Third/Fourth harmonic) mountable
Objective (optional)	For observation	**M Plan Apo**, **M Plan Apo HR**, **M Plan Apo SL**, **G Plan Apo**			
	For laser processing	—		**NIR** Series **NUV** Series Note 1: Selected depending on the wavelength of the laser source	**NIR** Series **NUV** Series **UV** Series Note 2: Selected depending on the wavelength of the laser source
Applicable camera (s)		2/3 type or less cameras (C-mount type)			
Optical system epi-illumination		Telecentric system equipped with an aperture diaphragm			
Illuminated lens tube		Bright-field illuminated lens tube			
Illumination unit (optional)		Fiber-optic cable illumination unit (100 W) (**378-700**)			
Main unit mass		650 g	750 g	1270 g	1300 g

Note 3: The **M Plan Apo 1X** objective is used with the polarization unit (**378-710** or **378-715**).

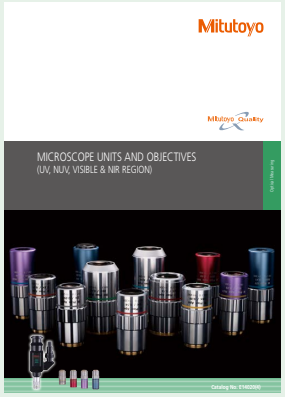

Refer to the Microscope Units and Objectives Brochure (**E14020**) for more details.

WIDE VMU

- Observation over a wide field of view (Image field of ø30 mm)
- Greatly enhanced brightness on the periphery of the field of view (Reduces the dependence on the light distribution characteristics.)
- Compatible with infrared optical systems*

* An infrared source and infrared camera are necessary. For more details on infrared observation, contact your local Mitutoyo sales office.

- Small optical observation system
- Compatible with **HR** series of high resolving power lens (Designed with pupil diameter of ø16.8 mm)
- Available for various observation methods (Including bright-field, dark-field for visual or scratch inspection, and polarized observation of objects with polarization characteristics)


Bright-field

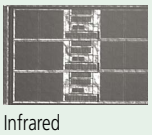
Infrared

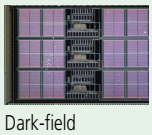
Dark-field


WIDE VMU-HR


WIDE VMU-BDV


WIDE VMU-BDH

SPECIFICATIONS

		For Bright-field Observation	For Bright/Dark-field Observation	
Model No.		**WIDE VMU-HR**	**WIDE VMU-BDV**	**WIDE VMU-BDH**
Order No.		**378-519**	**378-517**	**378-518**
Camera mounting orientation		Vertical	Vertical	Horizontal
Observation		Bright-field/Erect image	Bright/Dark-field/ Erect image	Bright/Dark-field/ Inverted image
Optical tube	Optical system	Magnification: 1X Visible light - Near-infrared light	Magnification: 1X Visible light	
	Camera Mount	F-Mount, C-Mount (with aligning and parfocal adjustment mechanism)		
	Imaging forming (tube) lens	Built in 1X (visible - NIR)	Built in 1X (visible)	
	Image field	ø30		
	Polarized unit*1	Mountable		
Objective (required option)		**M Plan Apo**, **M Plan Apo HR**, **M Plan Apo SL**, **G Plan Apo**, **NIR** Series	**BD Plan Apo**	
Applicable camera		Diagonal line length: 30 mm or less (equivalent to APS-C format)		
Optical system epi-illumination		Telecentric (Pupil diameter of ø16.8) Note: Coaxial epi-illumination, with aperture diaphragm	Telecentric illumination, Bright/Dark-field illumination optical tube (Dual-port fiber-optic illumination) Bright/Dark-field switching with light source on-off	
Illuminated lens tube		Bright-field illuminated lens tube (rotatable) *3, selectable between LED adapter and fiber adapter (both supplied as standard)	Bright-field illuminated lens tube (rotatable) *3	
Illumination unit (optional)*2		Fiber-optic illumination unit (100 W) (**378-700**)		
Main unit mass		1400 g	2000 g	2150 g

*1 Polarized observation by Bright-field illumination *2 Support for third-party LED illuminators (**WIDE VMU-HR** only)
*3 The fiber (light source) mount orientation can be changed.

J

Mitutoyo reserves the right to change any or all aspects of any product specification, including prices, designs and service content, without notice.

Mitutoyo

FS Objectives
SERIES 378 — Ultra-long working distance Objectives

- **M/BD Plan Apo** (M Plan Apochromat Bright/Dark-field) objectives feature the image evenness over the entire view field needed to achieve high color reproducibility.
- The following objectives support a wide range of wavelength including near infrared, visible, and ultraviolet lasers. Specialty LCD laser objectives are available: **NIR** (**-HR**) Series (Near-infrared lenses for laser processing featuring ultra-long working distances), **NUV** Series (Near-ultraviolet lenses), **UV** Series (Ultraviolet lenses), and **G Plan Apo** (Cover Glass corrected lenses that allow focusing through a window for vacuum and high temperature applications).
- Uses environment-friendly glass (no lead or arsenic) for the lens material.

BF (Bright-field) for observation/measurement



BD (Bright/Dark-field) for observation/measurement



For near-infrared calibration (**NIR**)



For near-ultraviolet calibration (**NUV**)



For the ultraviolet calibration (**UV**)



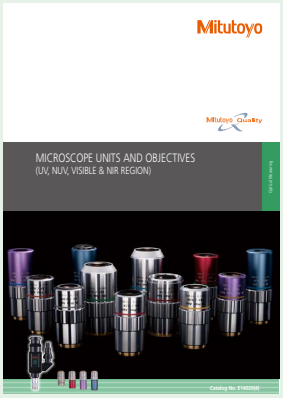

Refer to the Microscope Units and Objectives Brochure (**E14020**) for more details.

Varifocal Lens
TAGLENS

- Without changing the required magnification, ultra-high speed variable focal length enables obtaining perfectly focused images in real-time with stress-free operation.
- The time required for auto-focusing is drastically reduced, and the optical system focus range is extended without the expense of a mechanical drive.

TAGLENS-T1

Ultra-high speed, varifocal lens.
A dedicated controller and software are equipped as standard.

SPECIFICATIONS

Operating principle	Variable refraction index
Resonance frequency	70 kHz
Effective aperture	ø11 mm*
Transmittance	90% or more (λ400 to 700 nm)*

* The above value are based on optical design theoretically.





Video Microscope Unit VMU-T1

Microscope unit for configuring a varifocal optical system by incorporating **TAGLENS-T1**, the objective and the camera.

SPECIFICATIONS

Compatible TAGLENS	**TAGLENS-T1**
Imaging lens magnification	1X
Imaging area	ø11 mm
Applicable objective	**M Plan Apo** Series
Options	Manual turret, Power turret, Polarizer, Focusing unit A or B, XY stage, Simplified stand.

M Plan Apo Series

Objective		1X	2X	5X	7.5X	10X	20X	50X
Depth of focus×2 (mm)		0.88	0.18	0.028	0.012	0.007	0.003	0.0018
Total scanning width (mm)		16	4.0	0.64	0.28	0.16	0.04	0.007
Real FOV (mm)	1/2 inch camera	4.8×6.4	2.4×3.2	0.96×1.28	0.64×0.85	0.48×0.64	0.24×0.32	0.096×0.128
	2/3 inch camera	6.6×8.8	3.3×4.4	1.32×1.76	0.88×1.17	0.66×0.88	0.33×0.44	0.132×0.176



Refer to the Varifocal Lens **TAGLENS** Brochure (**E14025**) for more details.

Mitutoyo reserves the right to change any or all aspects of any product specification, including prices, designs and service content, without notice.

Optional Reticles for pocket comparators

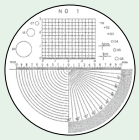
183-141


183-142

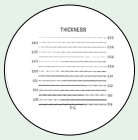
183-143

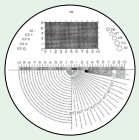
183-144


183-145


183-146

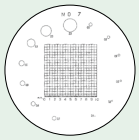
183-147


183-148


183-149

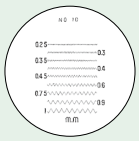
183-150

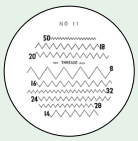
183-151


183-152

Mini Scope SERIES 183

- Portable and easy to carry. Provides 25X magnification for high-resolution observation.


183-210

SPECIFICATIONS

Magnification	Order No.	Remarks
25X	**183-210**	Pen type

Note: Not compatible with the interchangeable reticles.

Pocket Comparators SERIES 183

- By replacing optional reticles, dimensional, angle, and other types of measurement can be performed.


183-140

SPECIFICATIONS

Magnification	Order No.	Remarks
10X	**183-140**	Optional reticles available

Clear Loupe SERIES 183

- Three magnification options selectable according to your application.



183-310



183-311



183-312

SPECIFICATIONS

Magnification	Order No.	Remarks
5X	**183-310**	Drawtube removable
10X	**183-311**	Drawtube removable
15X	**183-312**	Drawtube removable

Note: Not compatible with the interchangeable reticles.

J

Mitutoyo reserves the right to change any or all aspects of any product specification, including prices, designs and service content, without notice.

Mitutoyo

Numerical Aperture (NA)

The NA figure is important because it indicates the resolving power of an objective. The larger the NA value the finer the detail that can be seen. A lens with a larger NA also collects more light and will normally provide a brighter image with a narrower depth of focus than one with a smaller NA value.

$$NA = n \cdot \sin\theta$$

The formula above shows that NA depends on n, the refractive index of the medium that exists between the front of an objective and the specimen (for air, n = 1.0), and angle θ, which is the half-angle of the maximum cone of light that can enter the lens.

Resolving Power (R)

The minimum detectable distance between two image points, representing the limit of resolution. Resolving power (R) is determined by numerical aperture (NA) and wavelength (λ) of the illumination.

$$R = \frac{\lambda}{2 \cdot NA} \ (\mu m) \quad \lambda = 0.55\ \mu m \text{ is often used as the reference wavelength}$$

Working Distance (W.D.)

The distance between the front end of a microscope objective and the surface of the workpiece at which the sharpest focusing is obtained.

Parfocal Distance

Distance between the surface of the specimen and the objective's seating surface when in focus.

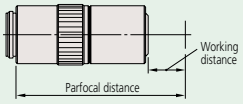

Infinity-corrected Optical System

An optical system in which the image is formed by an objective and a tube lens with an 'Infinity Space' between them, into which optical accessories can be inserted.

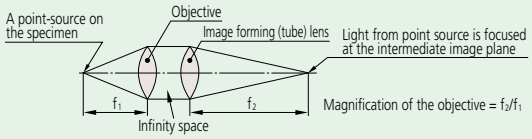

Finite-corrected Optical System

An optical system in which the image is formed only by an objective.

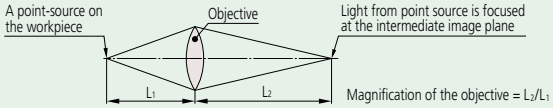

Focal Length (f)

unit: mm

The distance from the principal point to the focal point of a lens: if f_1 represents the focal length of an objective and f_2 represents the focal length of an image forming (tube) lens then magnification is determined by the ratio between the two. (In the case of the infinity-correction optical system.)

$$\text{Objective magnification} = \frac{\text{Focal length of the image-forming (tube) lens}}{\text{Focal length of the objective}}$$

Example: $1X = \frac{200}{200}$ Example: $10X = \frac{200}{20}$

Focal Point

Light rays traveling parallel to the optical axis of a converging lens system and passing through that system will converge (or focus) to a point on the axis known as the rear focal point, or image focal point.

Depth of Focus (DOF)

unit: mm

This is the distance (measured in the direction of the optical axis) between the two planes which define the limits of acceptable image sharpness when the microscope is focused on an object. As the numerical aperture (NA) increases, the depth of focus becomes shallower, as shown by the expression below:

$$DOF\ (\mu m) = \frac{\lambda}{2 \cdot (NA)^2} \quad \lambda = 0.55\ \mu m \text{ is often used as the reference wavelength}$$

Example: For an **M Plan Apo 100X** lens (NA = 0.7)
The depth of focus of this objective is

$$\frac{0.55\ \mu m}{2 \times 0.7^2} = 0.6\ \mu m$$

Bright-field and Dark-field Illumination

In bright-field illumination a full cone of light is focused by the objective on the specimen surface. This is the normal mode of viewing with an optical microscope. With dark-field illumination, the inner area of the light cone is blocked so that the surface is only illuminated by light from an oblique angle. Dark-field illumination is good for detecting surface scratches and contamination.

Apochromat and Achromat Objectives

An apochromat objective is a lens corrected for chromatic aberration (color blur) in three colors (red, green, blue). An achromat objective is a lens corrected for chromatic aberration in two colors (red, blue).

Magnification

The ratio of the size of a magnified object image created by an optical system to that of the object. Magnification commonly refers to lateral magnification although it can mean lateral, vertical, or angular magnification.

Principal Ray

A ray considered to be emitted from an object point off the optical axis and passing through the center of an aperture diaphragm in a lens system.

Aperture Diaphragm

An adjustable circular aperture which controls the amount of light passing through a lens system. It is also referred to as an aperture stop and its size affects image brightness and depth of focus.

Field Stop

An aperture which controls the field of view in an optical instrument.

Telecentric System

An optical system where the light rays are parallel to the optical axis in object and/or image space. This means that magnification is nearly constant over a range of working distances, therefore almost eliminating perspective error.

Erect Image

An image in which the orientations of left, right, top, bottom and moving directions are the same as those of a workpiece on the workstage.

Field number (FN), real field of view, and monitor display magnification

unit: mm

The observation range of the sample surface is determined by the diameter of the eyepiece's field stop. The value of this diameter in millimeters is called the field number (FN). In contrast, the real field of view is the range on the workpiece surface when actually magnified and observed with the objective. The real field of view can be calculated with the following formula:

(1) The range of the workpiece that can be observed with the microscope (diameter)

$$\text{Real field of view} = \frac{\text{FN of eyepiece}}{\text{Objective magnification}}$$

Example: The real field of view of a 10X lens is $2.4 = \frac{24}{10}$

(2) Monitor observation range

$$\text{Monitor observation range} = \frac{\text{The size of the camera image sensor (Length} \times \text{Height)}}{\text{Objective magnification}}$$

Size of image sensor

Format	Diagonal length	Length	Height
1/3 in	6.0	4.8	3.6
1/2 in	8.0	6.4	4.8
2/3 in	11.0	8.8	6.6

(3) Monitor display magnification

Monitor display magnification =

$$\text{Objective magnification} \times \frac{\text{Display diagonal length on the monitor}}{\text{Diagonal length of camera image sensor}}$$



CNC Vision Measuring System
QUICK VISION Pro Series

Refer to page K-4 for details.



Vision Measuring Machine with Micro-Form Scanning Probe
MiSCAN Vision System

Refer to page K-10 for details.



Vision Measuring System
QUICK SCOPE QS-L

Refer to page K-13 for details.

K

Vision Measuring Systems



Smart Measuring System

An online system to monitor the operational and mechanical statuses of measuring machines. This allows you to grasp the state of a process flow from the operational statuses of measuring machines within a production process.



Measurement Data Network System

MeasurLink® is a measurement data management system based on databases (SQL Server). You can build a network to manage the measurement results and measuring machines by simply combining the functions necessary for your purpose.

MeasurLink® is a registered trademark of Mitutoyo Corporation in Japan and Mitutoyo America Corporation in the United States.



Measuring Instruments Shipped with Inspection Certificate

Mitutoyo guarantees product quality as a leading precision measuring instrument manufacturer and ships measuring instruments with an inspection certificate that includes inspection data so that customers can use them with confidence.



Measurement Program

"MiCAT Planner" automatic measurement program generation software is supported.

INDEX

QUICK VISION Series

QV Active	K-3
QV APEX Pro/QV HYPER Pro	K-4
QV ACCEL	K-5
ULTRA QV	K-6
Hyper QVWLI	K-6
QV TP Active/QV TP Pro	K-7
QVH4 Pro	K-8
QV HYBRID TYPE1	K-8

Micro Form Measuring System

UMAP Vision System TYPE2	K-9

Vision Measuring Machine with Micro-Form Scanning Probe

MiSCAN Vision System	K-10

Data Processing Software

QVPAK	K-11
Application software	K-12

QUICK SCOPE Series

QS-L/AFC	K-13

QUICK IMAGE Series

Quick Image	K-14
Quick Guide to Precision Measuring Instruments	K-15

Mitutoyo

QV Active
CNC Vision Measuring System

- Cost effective, multifunction, CNC Vision Measuring System.
- Usability has been improved by adopting a color camera and 8-step zoom optics.
- The zoom ratio of 7X (14X at maximum by changing the fixed-magnification objective lens) enables a wide range of inspection from wide view measurement at low magnification to micro-measurement at high magnification.
- The 74 mm maximum working distance (1X optional objective) promotes safe working by reducing the risk of collision, and allows greater freedom in fixture design.



QV Active 404

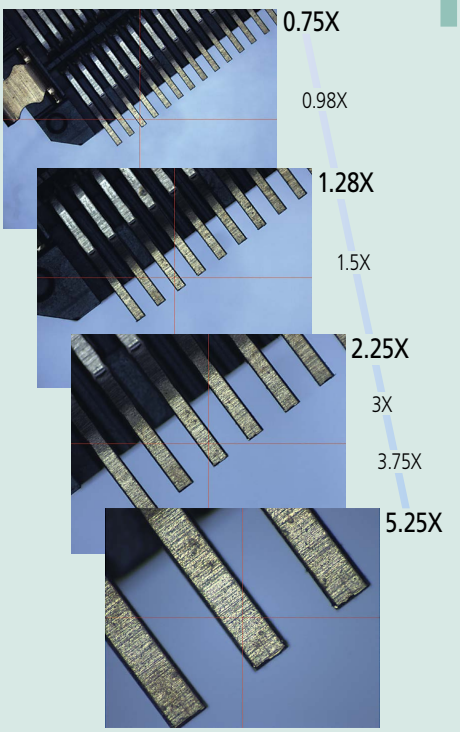

From wide view measurement to micro-measurement

Optical magnification		0.5X	0.65X	0.75X	0.85X	0.98X	1X	1.28X	1.3X	1.5X	1.7X	2X	2.25X	2.5X	3X	3.5X	3.75X	4X	5X	5.25X	7X
View field (mm)	Horizontal (H)	13.60	10.46	9.07	8.00	6.94	6.80	5.31	5.23	4.53	4.00	3.40	3.02	2.72	2.27	1.94	1.81	1.70	1.36	1.30	0.97
	Vertical (V)	10.80	8.31	7.20	6.35	5.51	5.40	4.22	4.15	3.60	3.18	2.70	2.40	2.16	1.80	1.54	1.44	1.35	1.08	1.03	0.77
Total magnification (on the monitor)		13.20	17.10	19.80	22.40	25.80	26.40	33.70	34.30	39.50	44.80	52.70	59.30	65.90	79.10	92.30	98.90	105.50	131.80	138.40	184.50

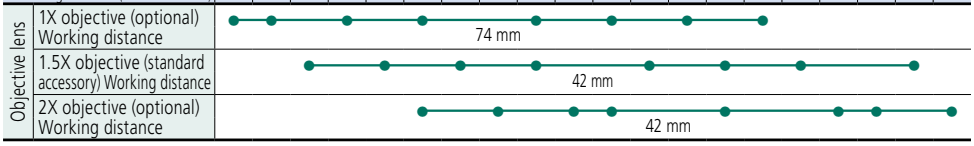

Note: The total magnification indicates the magnification on the monitor when the size of the **QVPAK** video window is 178.8×143.0 mm (default).

SPECIFICATIONS

Model No.		QV Active 202	QV Active 404
Type		Standard model	Standard model
Measuring range (X×Y×Z)		250×200×150 mm (250×200×118 mm: when 1X objective is used)	400×400×200 mm (400×400×168 mm: when 1X objective is used)
Observation unit		Zoom unit (8 positions)	
Imaging device		Color CMOS camera	
Vision measuring accuracy*	E_{1X}, E_{1Y}	(2 + 3L/1000) µm	
	E_{1Z}	(3 + 5L/1000) µm	
	E_2	(2.5 + 4L/1000) µm	
	Accuracy guaranteed with optics specified	Objective: 1.5X, Optical magnification: 5.25X	
Accuracy guaranteed temperature		20±1 °C	20±1 °C

* Inspected to a Mitutoyo standard. L=length between two arbitrary points (mm)

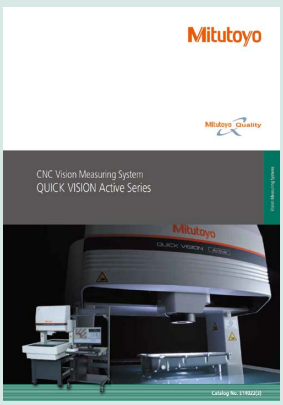

Refer to the **QUICK VISION Active** Series Brochure (**E14022**) for more details.

Mitutoyo reserves the right to change any or all aspects of any product specification, including prices, designs and service content, without notice.

SMS Smart Measuring System

MeasurLink® ENABLED
Data Management Software by Mitutoyo

PROPRIETARY INSPECTION CERTIFICATE

QV APEX Pro/QV HYPER Pro CNC Vision Measuring System

- Equipped with a strobe light and the newly developed StrobeSnap function, **QUICK VISION Pro** models deliver high-speed, high-accuracy measurements.
- The STREAM function is an optional upgrade to improve productivity by up to five times.



QV APEX 404 Pro



QV HYPER 302 Pro

StrobeSnap

All the **QUICK VISION Pro** models are equipped with a strobe light, and the newly developed vision measuring function "StrobeSnap" delivers measurements with both high throughput and high accuracy. Regardless of the continuity of measuring positions, measuring time can be shortened by about 35 to 45% for most measurement samples.

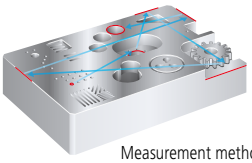

Measurement method

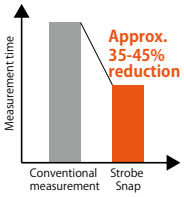

Note: Comparison with old specifications using our demo sample

STREAM function (optional)

The STREAM function provides an amazingly high throughput, due to the non-stop measurement where the camera motion and the strobe light are synchronized.
It can shorten measuring time more than StrobeSnap on account of continuous element measurement as shown in the following conceptual image of measurement.

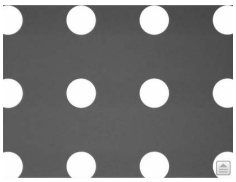

XY=0.2 mm pitch, 626
Measured with a field of view of 0.62×0.47 mm
STREAM measurement 36 sec.

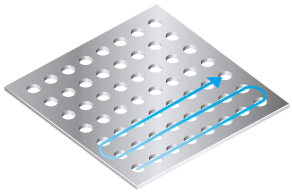

Measurement method

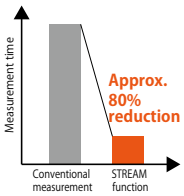

Note: Comparison with old specifications using our demo sample

Tracking Auto Focus (TAF)

Laser emitted from the objective lens enables automatic focusing.
The system automatically keeps the object in focus according to its shape, eliminating the task of focus adjustment and increasing measurement throughput.

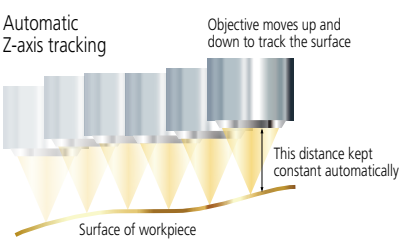

Laser source	Semiconductor laser (peak wavelength: 690 nm)
Laser safety	Class 2 (JIS C6802: 2014, EN/IEC 60825-1: 2014)
Auto focus system	Objective co-axial autofocusing (knife-edge method)

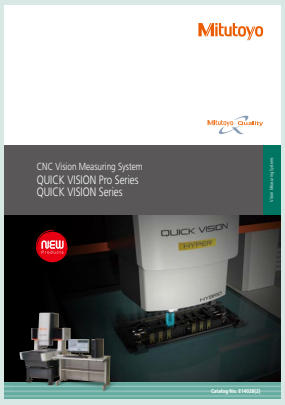

Refer to the **QUICK VISION** Series Brochure (**E14028**) for more details.

SPECIFICATIONS

QV APEX Pro

Items \ Model No.		QV APEX 302 Pro	QV APEX 404 Pro	QV APEX 606 Pro
Measuring range (X×Y×Z)		300×200×200 mm	400×400×250 mm	600×650×250 mm
Observation unit		Programmable power turret 1X-2X-6X		
Imaging device		B&W CMOS		
Vision measuring accuracy*	E_{UX}/E_{UY}, MPE	(1.5 + 3L/1000) μm		
	E_{UXY}, MPE	(2.0 + 4L/1000) μm		
	E_{UZ}, MPE	(1.5 + 4L/1000) μm		

QV HYPER Pro (Specifications other than as quoted in the table are the same as the QV APEX Pro specifications.)

Items \ Model No.		QV HYPER 302 Pro	QV HYPER 404 Pro	QV HYPER 606 Pro
Imaging device		B&W CMOS		
Vision measuring accuracy*	E_{UX}/E_{UY}, MPE	(0.8 + 2L/1000) μm		
	E_{UXY}, MPE	(1.4 + 3L/1000) μm		
	E_{UZ}, MPE	(1.5 + 2L/1000) μm		

* L=length between two arbitrary points (mm)

Mitutoyo reserves the right to change any or all aspects of any product specification, including prices, designs and service content, without notice.

Mitutoyo

QV ACCEL
Large CNC Vision Measuring System

- This is a vision measuring machine with moving-bridge type main unit structure suitable for measuring large, thin workpieces.
- **QV ACCEL 1212** (range: 1250×1250×100 mm) and **QV ACCEL 1517** (range: 1500×1750×100 mm) are available to special order.
- As the stage is immobile on the moving-bridge structure, you can use a simple method to fix a workpiece.



QV ACCEL 808

SPECIFICATIONS

Items \ Model No.			QV ACCEL 808	QV ACCEL 1010
Measuring range (X×Y×Z)			800×800×150 mm	1000×1000×150 mm
Observation unit			Programmable power turret 1X-2X-6X	
Imaging device			B&W CCD (1/2 in)	
Vision measuring accuracy*	E_{1X}, E_{1Y}		(1.5 + 3L/1000) µm	
	E_{1Z}		(1.5 + 4L/1000) µm	
	E_{2XY}		(2.5 + 4L/1000) µm	
Repeatability*	Short dimension	X, Y axis	$3\sigma \leq 0.2$ µm	
	Long dimension		$3\sigma \leq 0.7$ µm	
Tracking auto focus device			Optional	

* Inspected to a Mitutoyo standard. L=length between two arbitrary points (mm)



Refer to the **QUICK VISION** Series Brochure (**E14028**) for more details.

Mitutoyo reserves the right to change any or all aspects of any product specification, including prices, designs and service content, without notice.

MeasurLink® ENABLED
Data Management Software by Mitutoyo

PROPRIETARY INSPECTION CERTIFICATE

ULTRA QV
Ultra-High Accuracy CNC Vision Measuring System



ULTRA QV 404

- Ultra-high accuracy CNC vision measuring machine with measuring accuracy of E_{1XY} (0.25 + L/1000) µm.
- Our proprietary high-resolution (Resolution: 0.01 µm) and high-accuracy low-expansion glass scales are used on the X, Y and Z axes.
- The main unit utilizes a highly rigid moving Y-axis table with a fixed bridge. The base is made of high stability granite.
- This model is standard-equipped with an automatic temperature compensation function that uses a temperature sensor on the main unit of the measuring machine and a temperature sensor for the workpiece.

SPECIFICATIONS

Items \ Model No.		ULTRA QV 404
Measuring range (X×Y×Z)		400×400×200 mm
Observation unit		Programmable power turret 1X-2X-6X
Imaging device		B&W CCD (1/2 in)
Vision measuring accuracy*1	E_{1X}, E_{1Y}	(0.25 + L/1000) µm
	E_{1Z} (Full stroke)	(1.5 + 2L/1000) µm (Range 200 mm)
	E_{1Z} (50 mm stroke)*2	(1.0 + 2L/1000) µm (Range 10 to 60 mm)
	E_{2XY}	(0.5 + 2L/1000) µm
Tracking auto focus device		Optional

*1 Inspected to a Mitutoyo standard. L=length between two arbitrary points (mm)
*2 Verified at shipment from factory.

K

MeasurLink® ENABLED
Data Management Software by Mitutoyo

PROPRIETARY INSPECTION CERTIFICATE

Hyper QVWLI
Non-contact 3D Measuring System



Hyper QVWLI 606

- **Hyper QVWLI** is a high-accuracy dual 3D measurement system consisting of **QV** and a white light interferometer.
- You can perform 3D surface texture analysis from 3D data captured by the WLI optical system. You can also perform dimension measurement and cross-section measurement at a specific height using the 3D data.

SPECIFICATIONS

Items \ Model No.		Hyper QVWLI 302	Hyper QVWLI 404	Hyper QVWLI 606
Measuring range (X×Y×Z)	Vision measuring area	300×200×190 mm	400×400×240 mm	600×650×220 mm
	WLI measuring area*1	215×200×190 mm	315×400×240 mm	515×650×220 mm
WLI optical head unit				
View field (H×V)		5X lens: approx. 0.64×0.48 mm/10X lens: approx. 0.32×0.24 mm/ 25X lens: approx. 0.13×0.10 mm/50X lens: approx. 0.064×0.048 mm		
Z repeatability		2σ≤ 0.08 µm		
Vision optical head unit				
Observation unit		Programmable power turret 1X-2X-6X		
Imaging device		B&W CCD (1/2 in)		
Vision measuring accuracy*2	E_{1X}, E_{1Y}	(0.8 + 2L/1000) µm		
	E_{1Z}	(1.5 + 2L/1000) µm		
	E_{2XY}	(1.4 + 3L/1000) µm		

*1 Movable range of **WLI** optical head.
*2 Inspected to a Mitutoyo standard. L=length between two arbitrary points (mm)



Refer to the **QUICK VISION** Series Brochure (**E14028**) for more details.

Mitutoyo reserves the right to change any or all aspects of any product specification, including prices, designs and service content, without notice.

Mitutoyo

QV TP Active/QV TP Pro
CNC Vision Measuring System equipped with a Touch Trigger Probe

Non-contact and contact measurement on one machine

- **QV** touch-trigger probe unit enables both vision measurement and touch-trigger probe measurement.

3D workpiece measurement

- Enables 3D measurement of workpieces, such as press-molded products, plastic-molded products, and machined products, that until now could not be measured with image processing alone.

Module change rack available

- Using the module change rack enables switching between vision measurement and touch probe measurement during an automatic measuring sequence.



QV TP HYPER 404 Pro

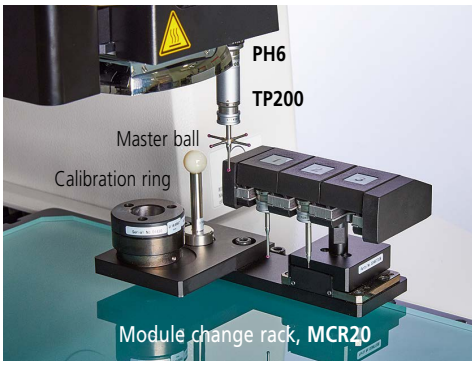

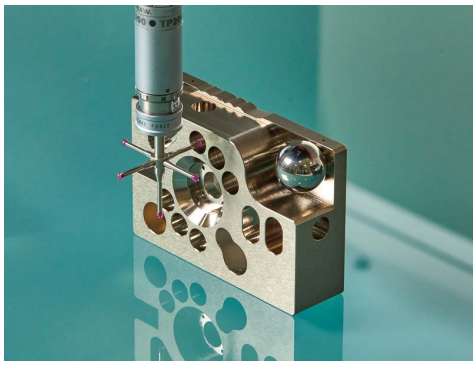

SPECIFICATIONS WITH TOUCH-TRIGGER PROBE OPTIONS MOUNTED

Items \ Model No.		QV TP Active 202	QV TP Active 404
Measuring range*1 (X×Y×Z)	Vision	250×200×150 mm	400×400×200 mm
	Common to Touch-trigger Probe	184×200×150 mm	334×400×200 mm
Measuring accuracy*2 (Touch-trigger probe)	E_{1X}, E_{1Y}, E_{1Z}	(2.4 + 3L/1000) µm	(2.4 + 3L/1000) µm

Items \ Model No.		QV TP APEX 302 Pro	QV TP APEX 404 Pro	QV TP APEX 606 Pro	QV TP HYPER 302 Pro	QV TP HYPER 404 Pro	QV TP HYPER 606 Pro
Measuring range*1 (X×Y×Z)	Vision	300×200×200 mm	400×400×250 mm	600×650×250 mm	300×200×200 mm	400×400×250 mm	600×650×250 mm
	Common to Touch-trigger Probe	234×200×200 mm	334×400×250 mm	534×650×250 mm	234×200×200 mm	334×400×250 mm	534×650×250 mm
Measuring accuracy*2 (Touch-trigger probe)	E_X, $_{MPE}$/E_Y, $_{MPE}$/ E_Z, $_{MPE}$	(1.8 + 3L/1000) µm			(1.7 + 3L/1000) µm		

*1 When a module change rack, a master ball, and a calibration ring are mounted, the measurement ranges are smaller than those in the table. Other specifications are the same as those for **QV Active**, **QV APEX Pro**, and **QV HYPER Pro**. Please contact our sales office for more details.

*2 L=length between two arbitrary points (mm)



Refer to the **QUICK VISION** Series Brochure (**E14028**) for more details.

Mitutoyo reserves the right to change any or all aspects of any product specification, including prices, designs and service content, without notice.

SMS Smart Measuring System

MeasurLink® ENABLED
Data Management Software by Mitutoyo

PROPRIETARY INSPECTION CERTIFICATE

QVH4 Pro

CNC Vision Measuring System equipped with Non-contact displacement sensor

- This dual system with a non-contact displacement sensor has a scanning function that enables measurement of minute height differences and 3D shapes.
- The non-contact displacement sensor (CPS probe) uses the wavelength confocal method.
- The LED used as the light source of the displacement sensor has an auto-brightness control function that enables seamless measurement of materials with different reflectivity.

Example of 3D form comparison

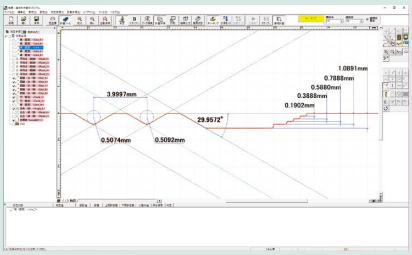





QVH4 HYPER 606 Pro

Features: QVH4 Pro

- Enables detection of high inclination angles for both mirror and diffused surfaces.
- The automatic lighting adjustment function allows for high accuracy measurements.
- Surface roughness or thickness measurement of thin and transparent objects such as film.

COMMON SPECIFICATIONS

Items	Model No.	QVH4 APEX 302 Pro	QVH4 APEX 404 Pro	QVH4 APEX 606 Pro	QVH4 HYPER 302 Pro	QVH4 HYPER 404 Pro	QVH4 HYPER 606 Pro
Measuring range (X×Y×Z)	Vision	300×200×200 mm	400×400×250 mm	600×650×250 mm	300×200×200 mm	400×400×250 mm	600×650×250 mm
	Non-contact displacement sensor	176×200×200 mm	276×400×250 mm	476×650×250 mm	176×200×200 mm	276×400×250 mm	476×650×250 mm
Vision measuring accuracy*1	$E_{UX}/E_{UY, MPE}$	(1.5 + 3L/1000) µm			(0.8 + 2L/1000) µm		
	$E_{UXY, MPE}$	(2.0 + 4L/1000) µm			(1.4 + 3L/1000) µm		
	$E_{UZ, MPE}$	(1.5 + 4L/1000) µm			(1.5 + 2L/1000) µm		
Displacement sensor measuring accuracy*1*2	E_{1Z}	(1.5 + 4L/1000) µm			(1.5 + 2L/1000) µm		

*1 L=length between two arbitrary points (mm) *2 Inspected to a Mitutoyo standard.

MeasurLink® ENABLED
Data Management Software by Mitutoyo

CLASS 1 LASER PRODUCT

Safety precautions regarding QV HYBRID TYPE1

This product uses a low-power invisible laser (780 nm) for measurement. The laser is a CLASS 1 EN/IEC 60825-1 device. A warning and explanation label, as shown above, is attached to the product as appropriate.

QV HYBRID TYPE1

CNC Vision Measuring System equipped with Non-contact displacement sensor

- This dual system with a non-contact displacement sensor has a scanning function that enables measurement of minute height differences and 3D shapes.
- The double-pinhole technique is used as the detection method of the displacement sensor. It is less directional compared with the knife-edge and triangulation techniques.
- The small laser spot with diameter of about 2 µm makes it possible to measure minute shapes.

Features: QV HYBRID TYPE1

- The focusing point method minimizes the difference in the measuring face reflectance and achieves high measurement reproducibility.
- Capable of measuring detailed shapes in high resolution.

COMMON SPECIFICATIONS

Items	Model No.	QVH1 Apex 302	QVH1 Apex 404	QVH1 Apex 606	Hyper QVH1 302	Hyper QVH1 404	Hyper QVH1 606
Measuring range (X×Y×Z)	Vision	300×200×200 mm	400×400×250 mm	600×650×250 mm	300×200×200 mm	400×400×250 mm	600×650×250 mm
	Non-contact displacement sensor	180×200×200 mm	280×400×250 mm	480×650×250 mm	180×200×200 mm	280×400×250 mm	480×650×250 mm
Vision measuring accuracy*	E_{1X}, E_{1Y}	(1.5 + 3L/1000) µm			(0.8 + 2L/1000) µm		
	E_{1Z}	(1.5 + 4L/1000) µm			(1.5 + 2L/1000) µm		
	E_{2XY}	(2.0 + 4L/1000) µm			(1.4 + 3L/1000) µm		
Displacement sensor measuring accuracy*	E_{1Z}	(1.5 + 4L/1000) µm			(1.5 + 2L/1000) µm		

* Inspected to a Mitutoyo standard. L=length between two arbitrary points (mm)

Mitutoyo reserves the right to change any or all aspects of any product specification, including prices, designs and service content, without notice.

Mitutoyo

MeasurLink® ENABLED
Data Management Software by Mitutoyo

UMAP Vision System TYPE2
Micro Form Measuring System

Ultrasonic Micro Probe UMAP

Contact measurement of a small hole's diameter and its section or contour is possible, which is difficult with a conventional Vision Measuring System or CMM. Capable of high accuracy, sophisticated, non-contact and contact measurement on one machine. With a minimum measuring force of 1 µN, it is not only less likely to mark workpiece surfaces, but also enables measurement of workpieces that are highly susceptible to deformation.

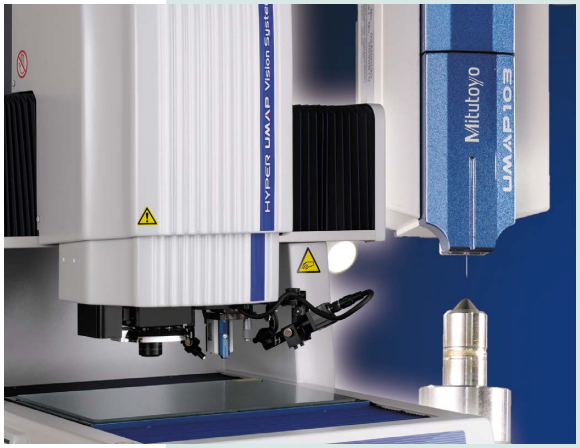



Micro probe, UMAP

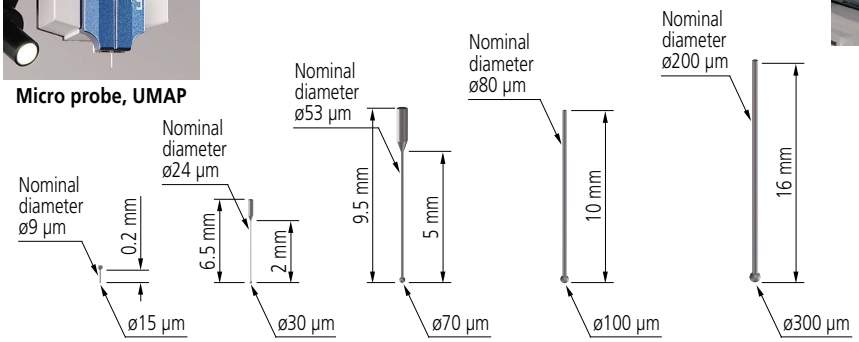

UMAP 101 Stylus
ø15 µm

UMAP 103 Stylus
ø30 µm

UMAP 107 Stylus
ø70 µm

UMAP 110 Stylus
ø100 µm

UMAP 130 Stylus
ø300 µm

Detection of surface principle

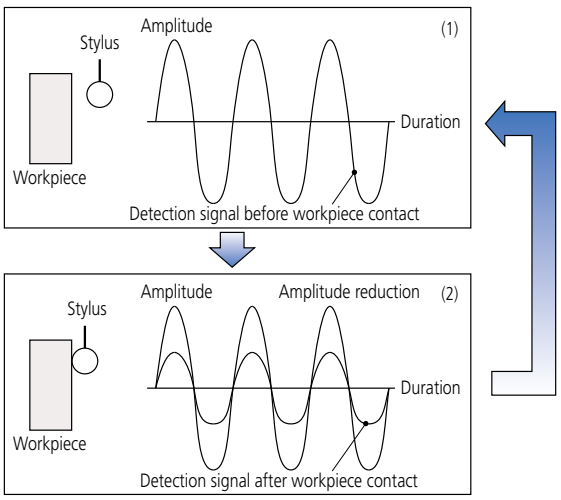

(1) In this drawing, the stylus is vibrating with micro amplitude. If it does not come into contact with the workpiece the vibration state is maintained.
(2) As the stylus comes into contact with the workpiece surface the vibration amplitude decreases as the contact increases. When the decreasing amplitude falls below a certain level, a touch-trigger signal is generated.

Typical applications

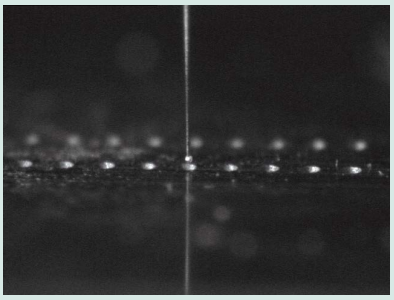

Contour measurement of a ø0.125 mm hole

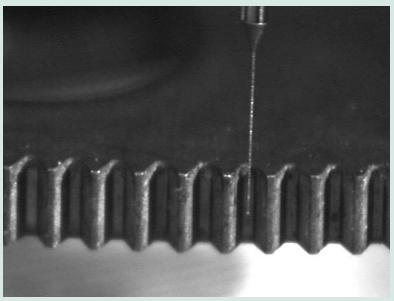

Measuring form of micro gear teeth

SPECIFICATIONS

Items	Model No.		TYPE2 Hyper UMAP 302	TYPE2 ULTRA UMAP 404
Measuring range (common to vision and **UMAP**)	X axis×Y axis		185×200 mm	285×400 mm
	Z axis	**UMAP 101/103**	175 mm	
		UMAP 107/110	180 mm	
		UMAP 130	185 mm	
Vision measuring accuracy*	E_{1X}, E_{1Y}		(0.8 + 2L/1000) µm	(0.25 + L/1000) µm
	E_{1Z}		(1.5 + 2L/1000) µm	
Repeatability	**UMAP 101/103/107**		σ=0.1 µm	σ=0.08 µm
	UMAP 110/130		σ=0.15 µm	σ=0.12 µm

* Inspected to a Mitutoyo standard. L=length between two arbitrary points (mm)

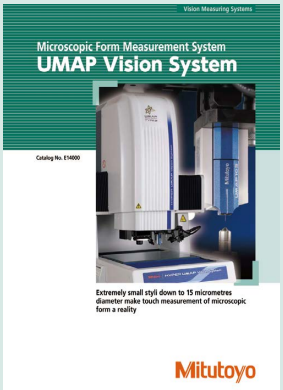

Refer to **UMAP Vision System** Brochure (**E14000**) for more details.

Mitutoyo reserves the right to change any or all aspects of any product specification, including prices, designs and service content, without notice.

SMS Smart Measuring System

MeasurLink® ENABLED
Data Management Software by Mitutoyo

PROPRIETARY INSPECTION CERTIFICATE

Vision Measuring Machine with Micro-Form Scanning Probe MiSCAN Vision System

- Hybrid measuring machine with vision head and scanning probe (**MPP-NANO**, **SP25M**).
- Newly developed **MPP-NANO** probe on which styli as small as 125 µm diameter can be mounted achieves autonomous 3D scanning of fine detail. The highly proven **SP25M** scanning probe is also supported.
- Using the observation camera, the approach to the workpiece for **MPP-NANO** stylus where visual confirmation is difficult can be easily performed while also checking for dirt and scratches on the workpiece.
- Using the same vision head as the **QUICK VISION** Series, the best-selling vision measuring system, high level performance can be provided in vision measurement.



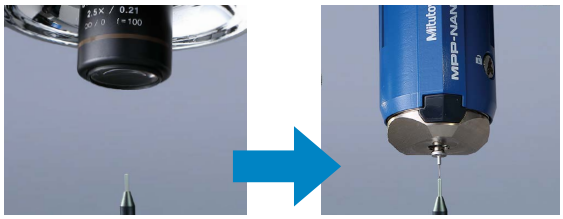



Precise positioning by monitoring the image

Measurement using **MPP-NANO** stylus

SPECIFICATIONS

Items \ Model No.			Hyper MVS 302	Hyper MVS 404	MVS Apex 404
Measuring range (X×Y×Z)	Vision measuring area		300×200×200 mm	400×400×250 mm	
	MPP-NANO/**SP25M**		175×200×200 mm	275×400×250 mm	
Imaging device			B&W CCD camera		
Observation unit			Programmable power turret 1X-2X-6X		
Illumination unit			Co-axial light, Transmitted light, PRL (programmable ring light)		
Contact type probe			**MPP-NANO**/**SP25M**	**SP25M** only	
Measuring accuracy*	E_{1X}/E_{1Y}		(0.8 + 2L/1000) µm		(1.5 + 3L/1000) µm
	E_{1Z}		(1.5 + 2L/1000) µm		(1.5 + 4L/1000) µm
	E_{2XY}		(1.4 + 3L/1000) µm		(2.0 + 4L/1000) µm
	MPP-NANO	$E_{0, MPE}$	(1.9 + 4L/1000) µm	—	
	SP25M	$E_{0, MPE}$	(1.9 + 4L/1000) µm		(2.5 + 6L/1000) µm
Scanning accuracy	**MPP-NANO**		0.6 µm	—	
	SP25M	MPE_{THP}	2.5 µm		2.7 µm
Probing accuracy	**MPP-NANO**		0.6 µm	—	
	SP25M	$P_{FTU, MPE}$	1.9 µm		2.2 µm
Repeatability (σ)	**MPP-NANO**		0.05 µm	—	
Accuracy guaranteed temperature	Ambient temperature		18 to 23 °C		
	Temperature variation		0.5 °C/1 H and 1 °C/24 H		

* Vision measuring accuracy using a **QV-HR 2.5X** objective and 2X tube lens.

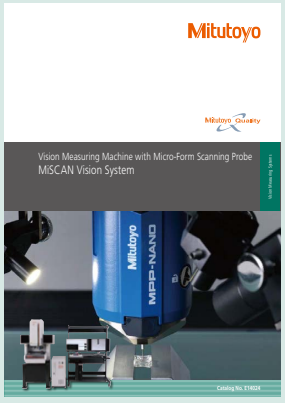

Refer to the **MiSCAN Vision System** Brochure (**E14024**) for more details.

Mitutoyo reserves the right to change any or all aspects of any product specification, including prices, designs and service content, without notice.

Mitutoyo

MeasurLink® ENABLED
Data Management Software by Mitutoyo

MiCAT
Mitutoyo Intelligent Computer Aided Technology
the standard in world metrology software
VISION

QVPAK
Data Processing Software for QUICK VISION

- The X, Y, and Z position data is detected from the measurement data gathered by the **QUICK VISION** system and the arithmetic processing of coordinates and dimensions is performed immediately.

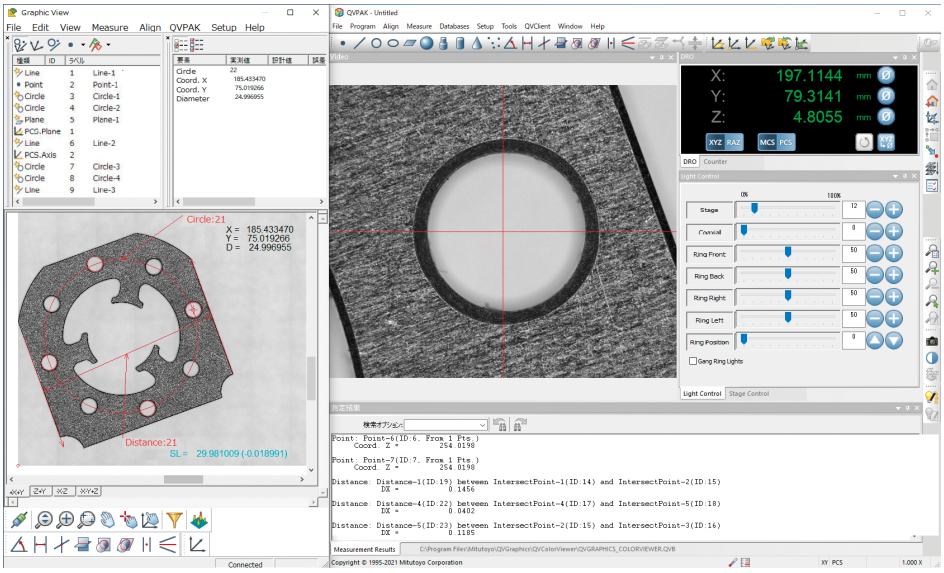

K

Edge Detection Tools

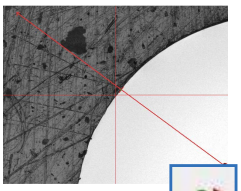

Simple Tool
This is a basic tool for detecting one point.

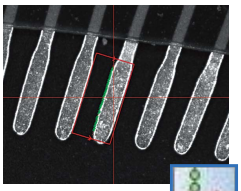

Box Tool
This tool detects linear edges with a minimum of one pixel interval. Compared to the simple tool, the Box tool can perform averaging and remove abnormal points, which enables stable measurements.

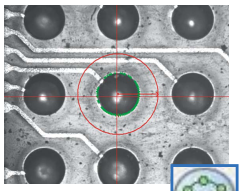

Circle Tool
This tool detects circular edges with a minimum of one pixel space. Edges can be specified easily with a single click.

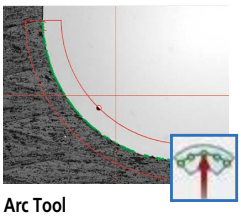

Arc Tool
This tool is suited to detection of arcs and corner radii.

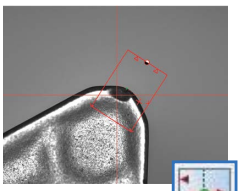

Maximum / Minimum Tool
This tool detects the maximum or minimum point within the range.

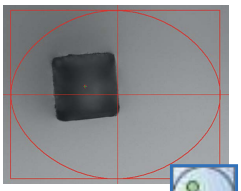

Area Centroid Tool
This tool detects the position of a form's centroid, and is suited to the positioning of different forms.

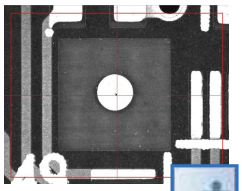

Pattern Search Tool
This tool performs pattern matching to detect a position, and is optimal for positioning alignment marks and similar tasks.

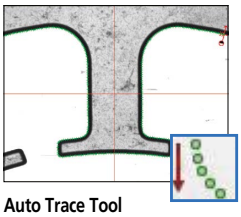

Auto Trace Tool
This is a shape-measuring tool that automatically tracks a contour with input consisting only of a start point and end point.

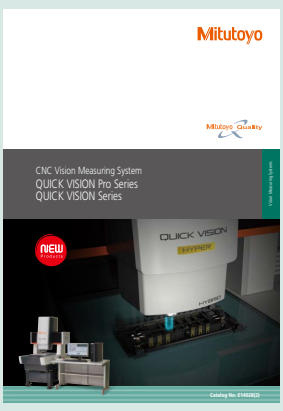

Refer to the **QUICK VISION** Series Brochure (**E14028**) for more details.

Mitutoyo reserves the right to change any or all aspects of any product specification, including prices, designs and service content, without notice.

Application software (Optional)

Form assessment / analysis software
FORMTRACEPAK-AP

Verification of designed value and form analysis are performed on the basis of the contour data obtained via the **QV** auto trace tool, non-contact displacement sensor, PFF, and WLI.

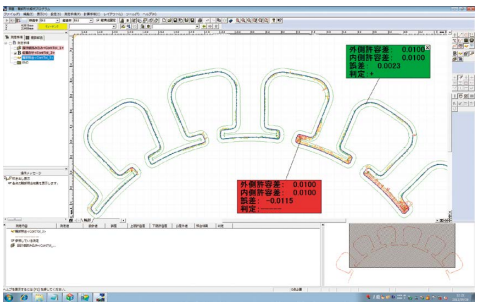

FORMTRACEPAK-PRO

This software performs 3D form analysis from the data obtained via the non-contact displacement sensor of the **QV HYBRID** Series.

MCubeMap

Allows you to analyze parameters compliant with JIS B681-2: 2018 (ISO25178-6: 2010), such as Sa, Sq and other height parameters from the 3D data captured by **QVWLI**.

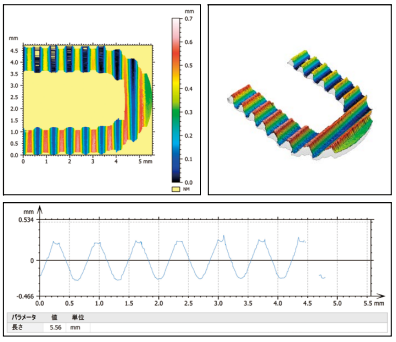

QV3DPAK

This software generates 3D forms from the PFF (Points From Focus) or WLI (White Light Interferometer) data.

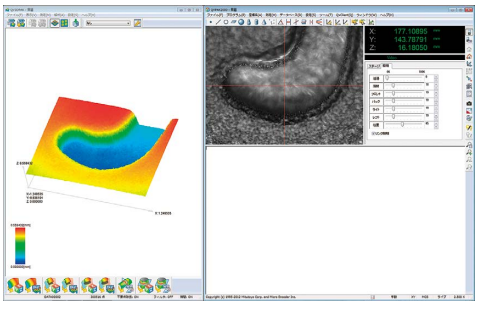

Measurement support software
QV3DCAD

QV3DCAD uses 3D CAD models to easily create **QVPAK** part program both online and offline.

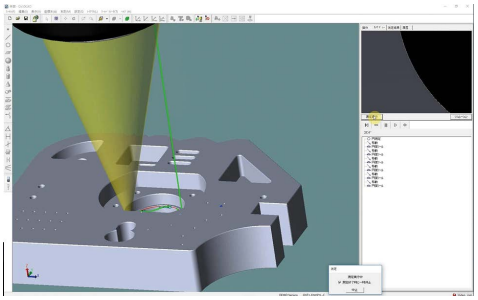

Offline teaching software
EASYPAG-PRO

This software creates **QVPAK** measurement procedure programs using 2D CAD data.

Statistical processing software
MeasurLink®

This software enables statistical arithmetic processing of measurement results.

External control software
QVEio

Allows you to externally control or output the operating status of a **QV** connected to a PLC or PC.

K

MeasurLink® ENABLED
Data Management Software by Mitutoyo

PROPRIETARY INSPECTION CERTIFICATE

QS-L/AFC
Manual Vision Measuring System

- Manual vision measuring system with a high speed, high-definition auto focus 3-megapixel camera.
- A 4-quadrant high-intensity LED ring light provides excellent observation performance.
- The newly designed zoom unit and interchangeable objectives achieve a maximum magnification ratio of 14X. Viewing possibilities extend from low magnification wide view measurement to high magnification micro-measurement.



QS-L3017Z/AFC



Auto focus image

From wide view measurement to micro-measurement

Optical magnification		0.5X	0.65X	0.75X	0.85X	0.98X	1X	1.28X	1.3X	1.5X	1.7X	2X	2.25X	2.5X	3X	3.5X	3.75X	4X	5X	5.25X	7X
View field (mm)	Horizontal (H)	13.2	10.2	8.8	7.8	6.8	6.6	5.2	5.1	4.4	3.9	3.3	2.9	2.6	2.2	1.8	1.7	1.7	1.3	1.2	0.9
	Vertical (V)	9.9	7.7	6.6	5.9	5.1	5.0	3.9	3.8	3.3	2.9	2.4	2.2	2.0	1.6	1.4	1.3	1.2	1.0	1.0	0.7
Total magnification (on the monitor)		20	26	30	34	39	40	51	52	60	68	79.3	89	99.3	119	138.7	149	158.7	198.7	208	277.3
Objective lens	1X objective (optional) Working distance	74 mm																			
	1.5X objective (standard accessory) Working distance	42 mm																			
	2X objective (optional) Working distance	42 mm																			

Note: The total magnification indicates the magnification on the monitor when the size of the **QSPAK** video window is 252.7×214.9 mm (default).

SPECIFICATIONS

Model No.		QS-L2010Z/AFC	QS-L3017Z/AFC	QS-L4020Z/AFC
Drive method		Auto focus equipped, X, Y axis: manual; Z axis: motor-operated		
Measuring range (X×Y×Z)		200×100×150 mm	300×170×150 mm	400×200×150 mm
Resolution/Scale unit		0.1 µm/Linear encoder		
Vision measuring accuracy*1*2	X axis, Y axis	(2.2 + 0.02L/1000) µm		
	Z axis	(4.5 + 0.006L/1000) µm		
Accuracy guaranteed temperature		20±1 °C		
Observation unit*3		7X zoom (8 steps) interchangeable objective lenses (1X objective 0.5X - 3.5X; 1.5X objective 0.75X - 5.25X; 2X objective 1X - 7X)		
Image detection method		3 megapixel, CMOS color camera (1/2 in)		
Illumination	Transmitted light	White LED		
	Co-axial light	White LED		
	Ring light	4-quadrant white LED		

*1 Inspected to a Mitutoyo standard. L=length between two arbitrary points (mm)
*2 3X lens magnification or greater
*3 1X and 2X objective lenses are optional

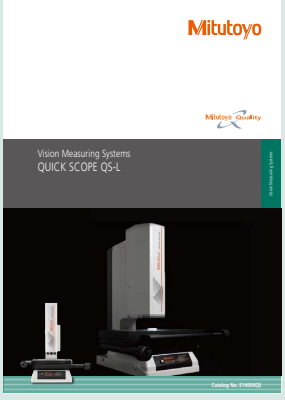

Refer to the **QUICK SCOPE QS-L** Brochure (**E14004**) for more details.

Mitutoyo reserves the right to change any or all aspects of any product specification, including prices, designs and service content, without notice.

Quick Image
Non-contact 2D Vision Measuring System

- This series of manual 2D vision measuring machines offers high-efficiency measurement by employing a telecentric optical system that has a deep focal depth and a wide view monitor.
- The stitching function enables the entire display of a large workpiece so that highly accurate and speedy measurement can be performed.
- A model equipped with a motorized stage has been added to the series to offer easy and comfortable stage operation.
- A single click enables multiple measurements in one display. A batch measurement can be applied to multiple workpieces in the display after executing a pattern search based on the workpiece position.
- This series is equipped with a 3-megapixel color camera. Even with low magnification, high repeatability can be obtained.
- The choice of five stage sizes makes it easy to choose a machine to suit the user's application.
- The video window automatically displays the measurement data, which enables quick verification.

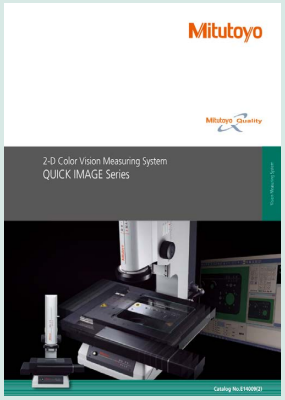

Refer to the **QUICK IMAGE** Series Brochure (**E14009**) for more details.



QI-C2017D



A motorized stage

K

SPECIFICATIONS

		Manual stage model					Motorized stage model		
Model No.	0.2X	**QI-A1010D**	**QI-A2010D**	**QI-A2017D**	**QI-A3017D**	**QI-A4020D**	**QI-C2010D**	**QI-C2017D**	**QI-C3017D**
	0.5X	**QI-B1010D**	**QI-B2010D**	**QI-B2017D**	**QI-B3017D**	**QI-B4020D**			
Measuring range (X×Y)		100×100 mm	200×100 mm	200×170 mm	300×170 mm	400×200 mm	200×100 mm	200×170 mm	300×170 mm
Effective stage glass size		170×170 mm	242×140 mm	260×230 mm	360×230 mm	440×232 mm	242×140 mm	260×230 mm	360×230 mm
Maximum stage loading *		Approx. 10 kg		Approx. 20 kg		Approx. 15 kg	Approx. 10 kg	Approx. 20 kg	
Main unit mass		Approx. 65 kg	Approx. 69 kg	Approx. 150 kg	Approx. 158 kg	Approx. 164 kg	Approx. 72 kg	Approx. 153 kg	Approx. 161 kg

* Does not include extremely offset or concentrated loads

Model No.			**QI-A / QI-C**	**QI-B**
View field			32×24 mm	12.8×9.6 mm
Measurement mode			High resolution mode / Normal mode *1	
Travel range (Z axis)			100 mm	
Vision measuring accuracy	Measurement accuracy within the screen *2	High resolution mode	±2 µm	±1.5 µm
		Normal mode	±4 µm	±3 µm
	Repeatability within the screen (±2σ) *3	High resolution mode	±1 µm	±0.7 µm
		Normal mode	±2 µm	±1 µm
	Measurement accuracy (E_{1XY}) *2		±(3.5 + 0.02L) µm L=arbitrary measuring length (mm)	
Monitor magnification *4			7.6X	18.9X
Optical system	Magnification (Telecentric Optical System)		0.2X	0.5X
	Depth of focus	High resolution mode	±0.6 mm	±0.6 mm
		Normal mode	±11 mm	±1.8 mm
	Working distance		90 mm	
Camera			3 megapixel, CMOS color camera (1/2 in)	
Illumination		Transmitted light	Green LED telecentric illumination	
		Co-axial light	White LED	
		Ring light	4-quadrant white LED	
Power supply			AC100 to 240 V 50/60 Hz	
Accuracy guaranteed temperature			20±1 °C	

*1 Patent registered (Japan)
*2 Inspected to Mitutoyo standards by focus point position.
*3 The measuring accuracy is guaranteed to be accurate within the depth of focus.
*4 For 1X digital zoom (when using a 22-inch-wide monitor)

Mitutoyo reserves the right to change any or all aspects of any product specification, including prices, designs and service content, without notice.

Mitutoyo

Quick Guide to Precision Measuring Instruments

Vision Measuring Machines

Vision Measurement

Vision measuring machines mainly provide the following processing capabilities.

- **Edge detection**

  Detecting/measuring edges in the XY plane

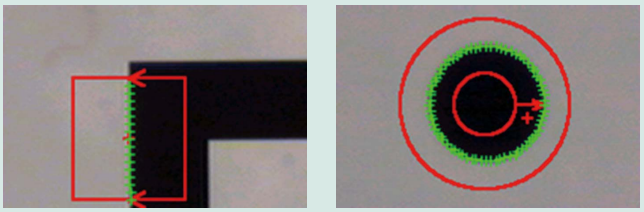

- **Auto focusing**

  Focusing and Z-axis measurement

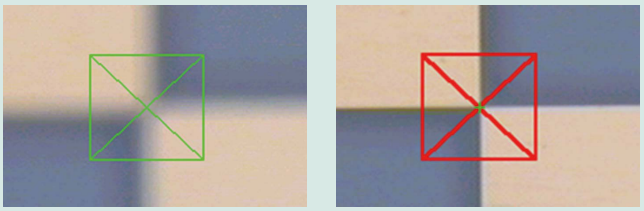

- **Pattern recognition**

  Alignment, positioning, and inspecting a feature

Image Storage

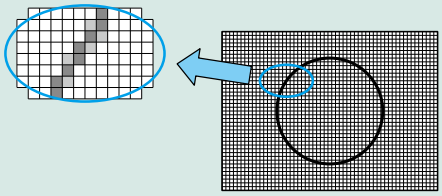

An image is comprised of a regular array of pixels. This is just like a picture on fine plotting paper with each square solid-filled differently.

Gray Scale

A PC stores an image after internally converting it to numeric values. A numeric value is assigned to each pixel of an image. Image quality varies depending on how many levels of gray scale are defined by the numeric values. The PC provides two types of gray scale: two-level and multi-level. The pixels in an image are usually displayed as 256-level gray scale.

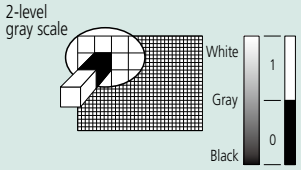

Pixels in an image brighter than a given level are displayed as white and all other pixels are displayed as black.

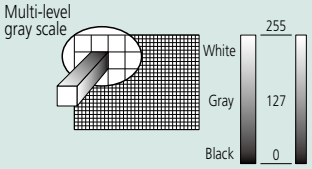

Each pixel is displayed as one of 256 levels between black and white. This allows high-fidelity images to be displayed.

Dimensional Measurement

An image consists of pixels. If the number of pixels in a section to be measured is counted and is multiplied by the size of a pixel, then the section can be converted to a numeric value in length. For example, assume that the total number of pixels in the lateral size of a square workpiece is 300 pixels as shown in the figure below.
If a pixel size is 10 µm under imaging magnification, the total length of the workpiece is given by 10 µm×300 pixels=3000 µm=3 mm.

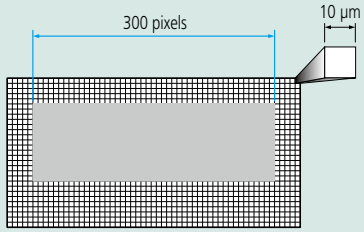

Edge Detection

How to actually detect a workpiece edge in an image is described using the following monochrome picture as an example. Edge detection is performed within a given domain. A symbol which visually defines this domain is referred to as a tool. Multiple tools are provided to suit various workpiece geometries or measurement data.

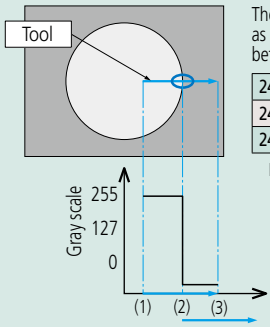

The edge detection system scans within the tool area as shown in the figure at left and detects the boundary between light and shade.

244	241	220	193	97	76	67	52	53	53
243	242	220	195	94	73	66	54	53	55
244	246	220	195	94	75	64	56	51	50

Example of numeric values assigned to pixels on the tool

(1) Scan start position
(2) Edge detection position
(3) Scan end position

High-resolution Measurement

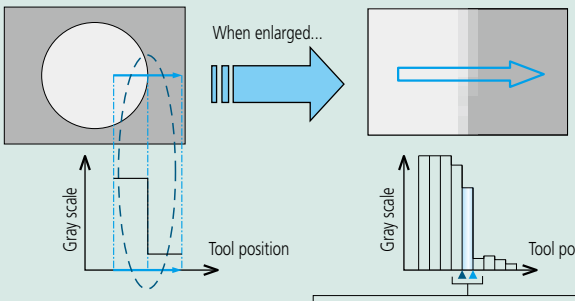

A position the system recognizes as an edge may be in error by up to one pixel width using normal image processing. This will prevent the execution of high-resolution measurement.

To increase the accuracy in edge detection, sub-pixel image processing is used. An edge is detected by determining an interpolation curve from adjacent pixel data as shown below.
As a result, it allows measurement with a resolution better than 1 pixel.

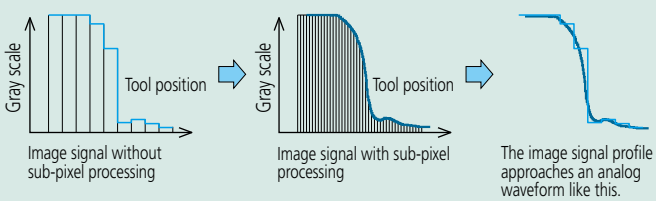

Measurement along Multiple Portions of an Image

Large features that cannot be contained on one screen have to be measured by precisely controlling the position of the sensor and stage so as to locate each reference point within individual images. By this means the system can measure even a large circle, as shown below, by detecting the edge while moving the stage across various parts of the periphery.

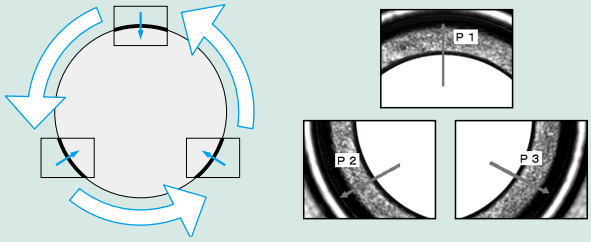

Variation in Contrast Depending on the Focus Condition

Edge contrast is low due to out-of-focus edges.

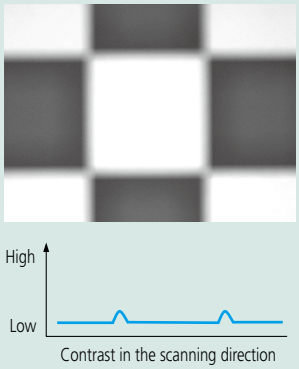

Edge contrast is high due to sharp, in-focus edges.

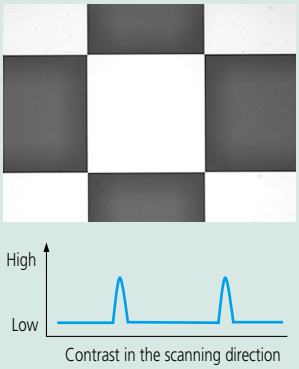

Composite Coordinates of a Point

Machine coordinate system

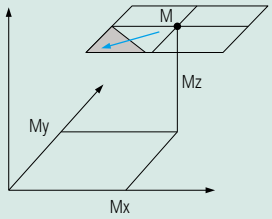

Vision coordinate system

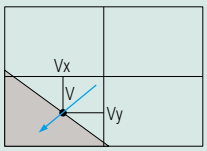

Measuring machine stage position
M = (Mx, My, Mz)

Detected edge position (from the center of vision)
V = (Vx, Vy)

Actual coordinates are given by X=(Mx+Vx), Y=(My+Vy), and Z=Mz, respectively.

Since measurement is performed while individual measured positions are stored, the system can measure dimensions that cannot be included in one screen, without problems.

Principle of Auto Focusing

The system can perform XY-plane measurement, but cannot perform height measurement using only the camera image. The system is commonly provided with the Auto Focus (AF) mechanism for height measurement. The following explains the AF mechanism that uses a common image, although some systems may use a laser AF.

The AF system analyzes an image while moving the camera up and down in the Z axis. In the analysis of image contrast, an image in sharp focus will show a peak contrast and one out of focus will show a low contrast. Therefore, the height at which the image contrast peaks is the just-in-focus height.

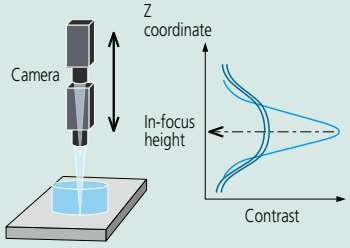

Overview of ISO 10360-7:2011

ISO 10360-7:2011 (Geometrical product specifications (GPS) -- Acceptance and reverification tests for coordinate measuring machines (CMM) -- Part 7: CMMs equipped with imaging probing systems) was published on June 1, 2011.
Some inspection items are listed in ISO 10360-7:2011. The following summarizes the test method for determining length measurement error (E) and probing error (P_{F2D}).

Length measurement error, *E*

Five test lengths in seven different directions within the measuring volume, each length measured three times, for a total of 105 measurements. Four directions are the space diagonal. Remaining three directions are user specified; default locations are parallel to the VMM axes.

When CTE (coefficient of thermal expansion) of the test-length artifact is $< 2\times10^{-6}$/K, additional measurement using an artifact with a normal CTE (8 to 13×10^{-6}/K) is performed.

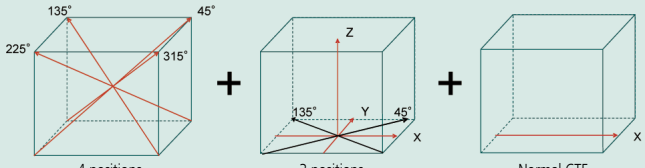

Probing error, P_{F2D}

Measure 25 points distributed evenly around the test circle (14.4° pitch).

Each of the 25 points shall be measured using the specified 25 areas of the field of view.

Calculate probing error as the range of the 25 radial distances (Rmax - Rmin) from the center of the least-square circle.

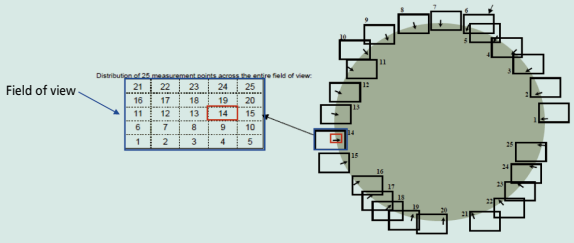

K

Mitutoyo



FORMTRACER Avant
(Surface Texture Measuring Instruments)
C3000/4000 Series
Refer to page L-10 for details.



FORMTRACER
(Surface Texture Measuring Instruments)
CS-3300 Series
Refer to page L-12 for details.



ROUNDTRACER EXTREME
(CNC Roundness/Cylindricity Measuring System)
RTX-0605-A
Refer to page L-25 for details.

L

Form Measurement

MeasurLink® ENABLED
Data Management Software by Mitutoyo

Measurement Data Network System

MeasurLink® is a measurement data management system based on databases (SQL Server). You can build a network to manage the measurement results and measuring machines by simply combining the functions necessary for your purpose.

MeasurLink® is a registered trademark of Mitutoyo Corporation in Japan and Mitutoyo America Corporation in the United States.



Measuring Instruments Shipped with Inspection Certificate

Mitutoyo guarantees product quality as a leading precision measuring instrument manufacturer and ships measuring instruments with an inspection certificate that includes inspection data so that customers can use them with confidence.

INDEX

Surftest (Surface Roughness Testers)

SJ-210 L-3
SJ-310 L-3
Optional Accessories for **SJ-210/310** L-4
SJ-410 L-5
SJ-500/SV-2100 L-6
SJ-500P/SV-2100M4 L-6

Surftest (CNC Surface Roughness Testers)

SV-3000CNC/SV-M3000CNC L-7

Contracer (Contour Measuring Instruments)

CV-2100 L-8

Formtracer (Surface Texture Measuring Instruments)

FORMTRACER Avant S3000 Series L-9
FORMTRACER Avant C3000/4000 Series L-10
FORMTRACER Avant D3000/4000 Series L-11
CS-3300 Series L-12

Formtracer Extreme (CNC Surface Texture Measuring Systems)

SV-C4500CNC L-13
SV-C4500CNC HYBRID TYPE1 L-13
CS-5000CNC/CS-H5000CNC L-14
FORMTRACEPAK L-15
Quick Guide to Precision Measuring Instruments (Surface Roughness Testers) L-17
Quick Guide to Precision Measuring Instruments (Contour Measuring Instruments) L-19

Roundtest (Roundness/Cylindricity Measuring Instruments)

RA-10 L-21
RA-120/120P L-21
RA-1600 L-22
RA-2200 L-22
RA-H5200 L-23
RA-2200 PLUS L-23
RA-H5200 PLUS L-24

Roundtest (CNC Roundness/Cylindricity Measuring Systems)

RA-6000 CNC L-24

ROUNDTRACER EXTREME (CNC Roundness/Cylindricity Measuring Systems)

RTX-0605-A L-25
ROUNDPAK L-26
Quick Guide to Precision Measuring Instruments L-27

Mitutoyo

MeasurLink® ENABLED
Data Management Software by Mitutoyo

Surftest SJ-210
SERIES 178 — On-site Surface Roughness Tester



Compact type all-in-one surface roughness tester has evolved by meeting customer demands

- The color LCD can display not only calculation results and measurement conditions, but also surface roughness waveforms. In addition, bigger character size contributes to visibility.
- Built-in rechargeable battery allows measurement without a mains power supply connection.



Refer to the Surftest **SJ-210/310** Series Brochure (**E15028**) for more details.

SPECIFICATIONS

Model No.			Standard drive unit		Retractable drive unit		Transverse tracing drive unit	
			SJ-210 (0.75 mN type)	**SJ-210** (4 mN type)	**SJ-210** (0.75 mN type)	**SJ-210** (4 mN type)	**SJ-210** (0.75 mN type)	**SJ-210** (4 mN type)
Order No.		mm	**178-560-11**	**178-560-12**	**178-562-11**	**178-562-12**	**178-564-11**	**178-564-12**
		inch/mm	**178-561-11**	**178-561-12**	**178-563-11**	**178-563-12**	**178-565-11**	**178-565-12**
Measuring range	X axis		16.0 mm				5.6 mm	
	Detector	Range	360 μm (-200 μm to +160 μm)					
		Range/Resolution	360 μm/0.0256 μm, 100 μm/0.0064 μm, 25 μm/0.0016 μm					
Measuring force/Stylus tip shape			Depends on the Order No.: 0.75 mN/2 μmR 60° (when the Order No. ends with "**-11**") 4 mN/5 μmR 90° (when the Order No. ends with "**-12**")					
Applicable standards			JIS B 0601:2001, JIS B 0601:1994, JIS B 0601:1982, VDA, ISO:1997, ANSI					
Assessed profile			Primary profile, Roughness profile, DF profile, Roughness motif profile					

L

MeasurLink® ENABLED
Data Management Software by Mitutoyo

Surftest SJ-310
SERIES 178 — On-site Surface Roughness Tester



Advanced handheld tester that is easy to operate and meets a variety of needs

- Equipped with a large, touch-screen color graphic LCD for intuitive operation and excellent ease of use.
- Equipped with a high-speed thermal printer (approx. 1.5 times faster than conventional models) as standard, allows for printing of BAC and ADC curves in addition to calculation results (including pass/fail judgments) and assessment profiles. The printer can also print horizontally to match the content displayed on the LCD, and has an easy-to-understand layout.

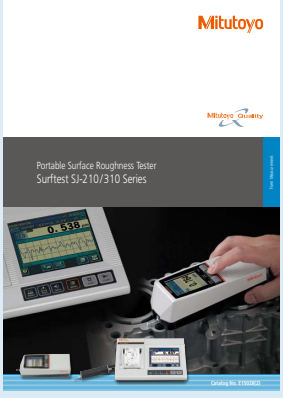

Refer to the Surftest **SJ-210/310** Series Brochure (**E15028**) for more details.

SPECIFICATIONS

Model No.			Standard drive unit		Retractable drive unit		Transverse tracing drive unit	
			SJ-310 (0.75 mN type)	**SJ-310** (4 mN type)	**SJ-310** (0.75 mN type)	**SJ-310** (4 mN type)	**SJ-310** (0.75 mN type)	**SJ-310** (4 mN type)
Order No.		mm	**178-570-11**	**178-570-12**	**178-572-11**	**178-572-12**	**178-574-11**	**178-574-12**
		inch/mm	**178-571-11**	**178-571-12**	**178-573-11**	**178-573-12**	**178-575-11**	**178-575-12**
Measuring range	X axis		16.0 mm				5.6 mm	
	Detector	Range	360 μm (-200 μm to +160 μm)					
		Range/Resolution	360 μm/0.0256 μm, 100 μm/0.0064 μm, 25 μm/0.0016 μm					
Measuring force/Stylus tip shape			Depends on the Order No.: 0.75 mN/2 μmR 60° (when the Order No. ends with "**-11**") 4 mN/5 μmR 90° (when the Order No. ends with "**-12**")					
Applicable standards			JIS B 0601:2001, JIS B 0601:1994, JIS B 0601:1982, VDA, ISO:1997, ANSI					
Assessed profile			Primary profile, Roughness profile, DF profile, Roughness motif profile, Waviness motif profile					

Mitutoyo reserves the right to change any or all aspects of any product specification, including prices, designs and service content, without notice.

Optional Accessories for Surftest SJ-210/310

Detector

Unit: mm

• Standard detectors

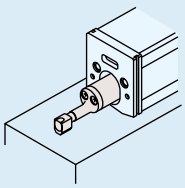

Order No.	Measuring force	Stylus profiles*	Remarks
178-296	0.75 mN	2 μmR/60°	Dedicated to the standard/retractable drive unit
178-390	4 mN	5 μmR/90°	
178-387	0.75 mN	2 μmR/60°	Dedicated to the transverse tracing drive unit
178-386	4 mN	5 μmR/90°	
178-391	4 mN	10 μmR/90°	Dedicated to the standard/retractable drive unit

*Tip radius/Tip angles

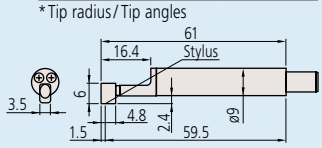

• Gear-tooth surface detectors

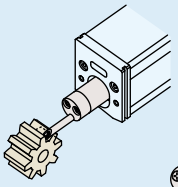

Order No.	Measuring force	Stylus profiles*
178-388	0.75 mN	2 μmR/60°
178-398	4 mN	5 μmR/60°

*Tip radius/Tip angles

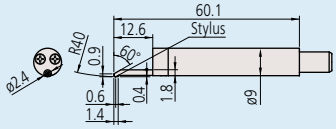

• Small hole detectors

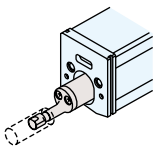

Order No.	Measuring force	Stylus profiles*	Remarks
178-383	0.75 mN	2 μmR/60°	Minimum measurable hole diameter: ø4.5 mm
178-392	4 mN	5 μmR/90°	

*Tip radius/Tip angles

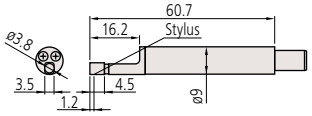

• Extra small hole detectors

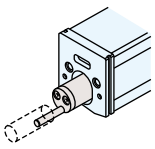

Order No.	Measuring force	Stylus profiles*	Remarks
178-384	0.75 mN	2 μmR/60°	Minimum measurable hole diameter: ø2.8 mm
178-393	4 mN	5 μmR/90°	

*Tip radius/Tip angles

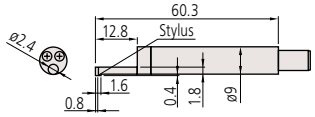

• Deep groove detectors

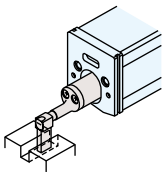

Order No.	Measuring force	Stylus profiles*	Remarks
178-385	0.75 mN	2 μmR/60°	Not available for the transverse tracing drive unit
178-394	4 mN	5 μmR/90°	

*Tip radius/Tip angles

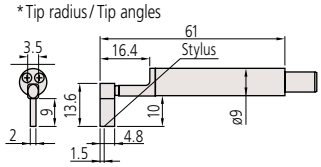

Optional Accessories for Drive Units

•Nosepiece for flat surfaces

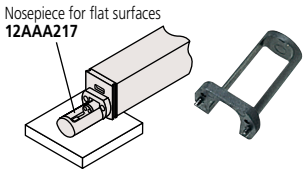

12AAA217
- Standard accessory for the standard/retractable drive unit of the **SJ-310** Series
- Not available for the transverse tracing drive unit

•Nosepiece for cylindrical surfaces

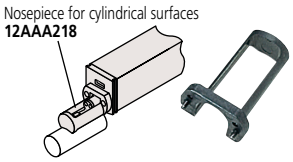

12AAA218
- Standard accessory for the standard/retractable drive unit of the **SJ-310** Series
- Not available for the transverse tracing drive unit

•V-type adapter

12AAE644
- Transverse tracing type standard accessory.
- Dedicated to the transverse tracing drive unit.

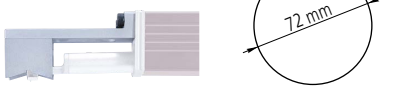

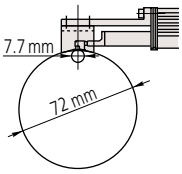

•Point-contact adapter

12AAE643
- Transverse tracing type standard accessory.
- Dedicated to the transverse tracing drive unit.



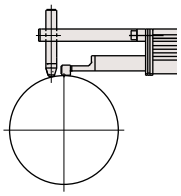

•Extension rod (50 mm) (Note: Only one rod can be used.)

12AAA210
- Not available for the transverse tracing drive unit
- Not applicable to upward measurement.



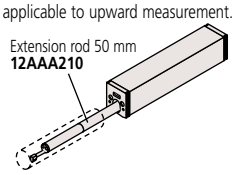

•Extension cable (1 m) (Note: Only one rod can be used.)

12BAA303
- For the connection between the calculation display unit and drive unit

•Support feet set

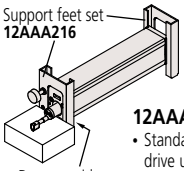

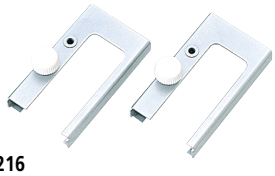

12AAA216
- Standard accessory for the standard/retractable drive unit of the **SJ-310** Series
- Not available for the transverse tracing drive unit
- Adjustment range is 28 mm from bottom face.

•Adapter for flat surface

12AAA219
- Not available for the transverse tracing drive unit



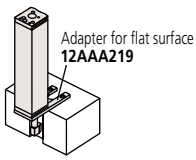

•Magnetic stand adapter

12AAA221
Mounting spigot diameter is 8 mm.

12AAA220
Mounting spigot diameter is 9.5 mm.



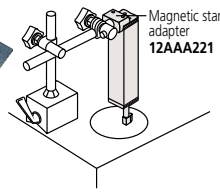

•Height gage adapter

Note: Suiable for a height gage holder designed for 9×9 mm section scribers.

12AAA222



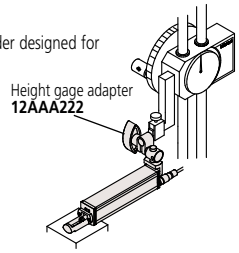

















L

Mitutoyo reserves the right to change any or all aspects of any product specification, including prices, designs and service content, without notice.

MeasurLink® ENABLED
Data Management Software by Mitutoyo

PROPRIETARY INSPECTION CERTIFICATE

Surftest SJ-410
SERIES 178 — Compact Surface Roughness Tester



SPECIFICATIONS

Model No.			SJ-411		SJ-412	
Order No.		mm	178-580-11	178-580-12	178-582-11	178-582-12
		inch/mm	178-581-11	178-581-12	178-583-11	178-583-12
Measuring range	X axis		25 mm		50 mm	
	Z axis (detector)		800 µm, 80 µm, 8 µm Up to 2,400 µm when using an optional stylus.			
Detector	Detection method		Differential inductance			
	Resolution		0.0125 µm (800 µm range), 0.00125 µm (80 µm range), 0.000125 µm (8 µm range)			
	Stylus tip shape (Angle/Radius)		60°/2 µm	90°/5 µm	60°/2 µm	90°/5 µm
	Measuring force		0.75 mN	4 mN	0.75 mN	4 mN
	Radius of skid curvature		40 mm			
	Measuring methods		Skidless/Skidded (switchable)			
Drive unit (X axis)	Measuring speed		0.05, 0.1, 0.2, 0.5, 1.0 mm/s			
	Drive speed		0.5, 1, 2, 5 mm/s			
	Straightness		0.3 µm/25 mm		0.5 µm/50 mm	
Up/down inclination unit	Vertical travel		10 mm			
	Inclination adjustment angle		±1.5°			
Applicable standards			JIS 1982/JIS 1994/JIS 2001/ISO 1997/ANSI/VDA			
Parameter			Ra, Rq, Rz, Ry, Rp, Rv, Rt, R3z, Rsk, Rku, Rc, RPc, RSm, Rmax*1, Rz1max*2, S, HSC, RzJIS*3, Rppi, RΔa, RΔq, Rlr, Rmr, Rmr(c), Rσc, Rk, Rpk, Rvk, Mr1, Mr2, A1, A2, Vo, λa, λq, Lo, Rpm, tp*4, Htp*4, R, Rx, AR, W, AW, Wx, Wte Customizable			
Filtered profile			Primary profile, Roughness profile, DF profile, Waviness profile, Roughness motif profile, Waviness motif profile			
Analysis graph			Material ratio curve, Profile height amplitude distribution curve			
Data compensation functions			Parabola, Hyperbola, Ellipse, Circle, Tilt, No compensation			
Filter			2CR, PC75, Gaussian			
Cutoff value	λc		0.08, 0.25, 0.8, 2.5, 8 mm			
	λs *5		2.5, 8, 25 µm			
Sampling length			0.08, 0.25, 0.8, 2.5, 8, 25 mm			
Number of intervals			x1, x2, x3, x4, x5, x6, x7, x8, x9, x10, x11, x12, x13, x14, x15, x16, x17, x18, x19, x20			
Arbitrary length			0.1 to 25 mm		0.1 to 50 mm	
Calculation display unit	Customization		Selection of display/evaluation roughness parameter			
	Simplified contour analysis function		Step, Step quantity, Area, Coordinate difference			
	D.A.T. (Digimatic Adjustment Table) function		Helps to level workpiece prior to skidless measurement			
	Real sampling function		Inputs the displacement of the detector while stopping the drive unit			
	statistical processing		Calculates the maximum value, minimum value, average value, standard deviation, pass rate and histogram for each parameter.			
	Judgment*6		Maximum value rule, 16% rule, mean value rule, standard deviation (1σ, 2σ, 3σ)			
	Storing measurement condition		Max. 10 (calculation display unit)			
	Print function (Built-in thermal printer)		Measurement condition/Calculation result/Judgment result/Calculation result per segment/Tolerance value/Evaluation curve/Graphic curve/Material ratio curve/Profile height amplitude distribution curve/Environmental setting items/Statistical result (Histogram)			
	Display language		16 languages (Japanese, English, German, French, Italian, Spanish, Portuguese, Korean, Chinese (simplified/traditional), Czech, Polish, Hungarian,Turkish, Swedish, Dutch)			
	Storage function		Built-in memory: Measurement condition (Up to 10) Memory card (optional): 500 measurement conditions, 10000 measured profiles, 500 display images, 10000 text files, 500 statistical data, 1 backup file of device setting data, 10 data of Trace 10			
	External I/O functions		USB I/F, Digimatic output, RS-232C I/F, Foot switch I/F			
Power supply	Battery Charging time/Endurance		Built-in battery (rechargeable Ni-MH battery)/AC adapter Charging time of the built-in battery: about 4 hours (may vary due to ambient temperature) Endurance: about 1000 measurements (differs slightly due to use conditions/environment)			
	Max. power consumption		50 W			
External dimensions (W×D×H)	Calculation display unit		275×198×109 mm			
	Up/down inclination unit		130.9×63×99 mm			
	Drive unit		128×35.8×46.6 mm		154.5×35.8×46.6 mm	
Mass	Calculation display unit		1.7 kg			
	Up/down inclination unit		0.4 kg			
	Drive unit		0.6 kg		0.64 kg	
Standard Accessories			Detector*7/Standard stylus*8 **178-601** Roughness specimen (Ra3 µm) **270732** Receipt paper (Standard type: 5-roll set) **12BAL402** Protective sheet for the LCD (x1 sheet) **12BAR507** Touch pen **12AAN041** Carrying case		AC adapter, Power cable, Flat-blade screwdriver, Phillips screwdriver, Hex wrench, Strap for the touch pen, Operation manual, One-sheet manual, Warranty card	

*1 Calculation is available only when selecting the VDA, ANSI, or JIS 1982 standards.
*2 Calculation is available only when selecting the ISO 1997 standard. *3 Calculation is available only when selecting the JIS 2001 standard.
*4 Calculation is available only when selecting the ANSI standard. *5 Not available when selecting the JIS 1982 standard.
*6 Only the mean value rule is available for the ANSI standard. 16% rule is not available when selecting the VDA standard.
*7 Depending on the Order No. of the **SJ-410** Series main unit, **178-396** (0.75 mN) or **178-397** (4 mN) is provided as standard.
*8 Standard stylus (**12AAC731** or **12AAB403**) supporting the provided detector is provided as standard.

Dramatic improvement on compact type surface roughness testers

- Equipped with a large, touch-screen color graphic LCD to achieve both intuitive operation and high operability.
- Skidded and skidless measurement are switchable to perform optimum evaluation according to the measurement setup.
- A wide-range, high-resolution detector and a very accurate drive unit provide superior high-accuracy measurement in its class.
- **Detector**
  Measuring range: 800 µm
  Resolution: 0.0001 µm (when the measuring range is 8 µm)
- **Drive unit**
  Straightness/Drive length: 0.3 µm/25 mm (**SJ-411**)
  Straightness/Drive length: 0.5 µm/50 mm (**SJ-412**)
- Simplified contour analysis (Step, Step quantity, Area, Coordinate difference) is available using the point cloud data collected to evaluate the surface roughness.
  Allows the evaluation of detailed shapes that cannot be achieved by contour measuring instruments.

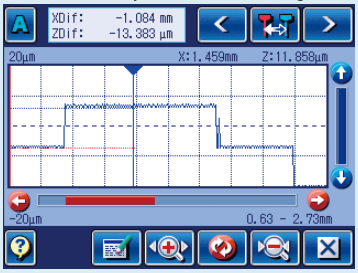

- Allows the evaluation of surface roughness in a circumferential direction using the skidless measurement and R-surface compensation functions.
- Conforms to the latest ISO standard and ANSI/VDA standard in addition to the JIS standard (2001/1994/1982).
- Achieves the performance of a desktop type surface roughness tester in combination with the simplified stand and associated optional accessories.

Optional Accessories for SJ-410 Consumables

• Receipt paper Standard type (5-roll set)	**270732**
• Receipt paper High-durability paper (5-roll set)	**12AAA876**
• Protective sheet for the touch panel (x10 sheets)	**12AAN040**
• Memory card (2 GB)	**12AAW452**

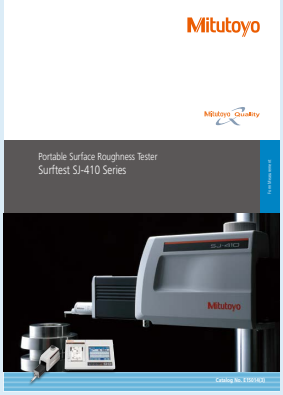

Refer to the Surftest **SJ-410** Series Brochure (**E15014**) for more details.

Mitutoyo reserves the right to change any or all aspects of any product specification, including prices, designs and service content, without notice.

MeasurLink® ENABLED
Data Management Software by Mitutoyo

PROPRIETARY INSPECTION CERTIFICATE

Surftest SJ-500/SV-2100
SERIES 178 — Dedicated Control Unit Type Surface Roughness Tester

High precision and high performance type surface roughness tester with a dedicated control unit, offering a user-friendly display and simple operation.

- Equipped with a 7.5-inch, color TFT LCD, color icons and touch panel controls, the display unit is easy to read and simple to operate.
- A built-in joystick on the control unit allows quick and easy positioning. The manual adjustment knob allows fine positioning of a small stylus for measuring small holes.
- In addition to the roughness parameters compliant with ISO/JIS/ANSI/VDA surface roughness standards, contour analysis is also available.



SV-2100M4

SV-2100S4

SPECIFICATIONS

Model No.		SJ-500	SV-2100M4*1	SV-2100S4*1	SV-2100H4*1	SV-2100W4*1
Stand type		—*2	Manual stand	Motorized stand		
Measuring range	Z1 axis (detector)	800 µm, 80 µm, 8 µm				
	X axis	50 mm	100 mm			
Resolution	X axis	0.05 µm				
	Z1 axis (detector)	0.01 µm (800 µm), 0.001 µm (80 µm), 0.0001 µm (8 µm)				
	Z2 axis (column)	—	—	1 µm		
Assessed profile		Primary profile, Roughness profile, Waviness profile, DF profile, Roughness motif profile, Waviness motif profile				

*1 While the appearance of the natural stone measuring table varies according to the source, the high stability for which this material is known can always be relied upon.
*2 Stand for **SJ-500** is optional.

MeasurLink® ENABLED
Data Management Software by Mitutoyo

PROPRIETARY INSPECTION CERTIFICATE

Surftest SJ-500P/SV-2100M4
SERIES 178 — Data Processing Unit (PC) Surface Roughness Testers

A superior data processing tester with PC data analysis for higher efficiency.

Note: If a power column type (**SV-2100S4**/**H4**/**W4**) with PC data-processing is required, consider the **FORMTRACER Avant S3000** Series (Refer to page L-9 for specifications).



SJ-500P

SV-2100M4 (PC type)

FORMTRACEPAK: Best-selling Surface Roughness Analysis Program

Best-selling dedicated software for surface roughness measurement and analysis.
Features a flexible printer format and creation of an original inspection certificate.

SPECIFICATIONS

Type of data processing unit		PC type	
Model No.		SJ-500P	SV-2100M4*1
Elevating shaft mechanism of stand		—*2	Manual operation only
Measuring range	X axis	50 mm	100 mm
	Z1 axis (detector)	800 µm, 80 µm, 8 µm	
Z2-axis (column) travel range		—	350 mm
Resolution	X axis	0.05 µm	
	Z1 axis (detector)	0.01 µm (800 µm), 0.001 µm (80 µm), 0.0001 µm (8 µm)	
	Z2 axis (column)	—	—
Applicable standards		JIS 1982/JIS 1994/JIS 2001/ISO 1997/ANSI/VDA	
Assessed profile		Primary profile, Roughness profile, Waviness profile, Filtered waviness profile, Rolling circle waviness profile, Rolling circle center line waviness profile, Envelope residual profile, DIN4776 profile, Roughness motif profile, Waviness motif profile	

*1 While the appearance of the natural stone measuring table varies according to the source, the high stability for which this material is known can always be relied upon.
*2 The simplified stand or manual column stand is available as an optional accessory.

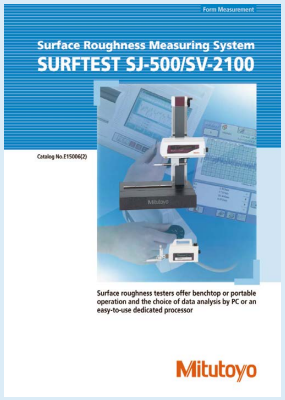

Refer to the Surftest **SJ-500**/**SV-2100** Brochure (**E15006**) for more details.

Mitutoyo reserves the right to change any or all aspects of any product specification, including prices, designs and service content, without notice.

Mitutoyo

MeasurLink® ENABLED
Data Management Software by Mitutoyo

PROPRIETARY INSPECTION CERTIFICATE

Surftest Extreme SV-3000CNC/SV-M3000CNC SERIES 178 — CNC Surface Roughness Testers



SV-3000CNC
(Inclinable drive unit + Y-axis table)



SV-M3000CNC
(Surface Roughness Tester with built-in Y axis.)
(The photo represents a special specification model.)

- The X1, Y and Z2 axes have a maximum drive speed of 200 mm/s.
  This permits high-speed positioning that can potentially result in a large increase in the throughput of multiple-profile/multiple-workpiece measurement tasks.
- Capable of inclined plane measurement through 2 axis simultaneous control in X and Y.
- Models equipped with the α axis allow continuous measurement on horizontal and inclined surfaces by power-tilting the X1 axis.
- It is possible to expand the measuring range for multiple workpieces through positioning in Y.
- All connecting cables are contained within the measuring instrument to eliminate any inconvenience during measurement.
- Since the Z1-axis detector incorporates an anti-collision safety device, the detector unit will automatically stop if it touches a workpiece or fixture.
- Surftest Extreme **SV-M3000CNC** (CNC Surface Roughness Tester with a movable Y-axis table) that handles measurement of large/heavy workpieces, such as engine blocks or crankshafts, is also available.
- Optional external control function (Ext I/O) through bidirectional communication (RS-232C) with the PLC (programmable logic controller) is available.

SV-3000CNC SPECIFICATIONS

Model No.			SV-3000CNC
X1 axis (drive unit)	Measuring range		200 mm
	Resolution		0.05 µm
	Scale type		Reflective-type linear encoder
	Drive speed	CNC mode	Max. 200 mm/s
		Joystick mode	0 to 50 mm/s
	Measuring speed		0.02, 0.05, 0.1, 0.2, 0.5, 1.0, 2.0 mm/s
	Measuring direction		Backward
	Straightness		0.5 µm/200 mm
Y axis (table)	Measuring range		200 mm
	Resolution		0.05 µm
	Drive speed	CNC mode	Max. 200 mm/s
		Joystick mode	0 to 50 mm/s
	Maximum table loading		20 kg
Z2 axis (column)	Travel range	Z2 axis (column, type **S**)	300 mm
		Z2 axis (column, type **H**)	500 mm
	Resolution		0.05 µm
	Scale type		Reflective-type linear encoder
	Drive speed	CNC mode	Max. 200 mm/s
		Joystick mode	0 to 50 mm/s
Base unit	Base size (width×depth)		750×600 mm
	Base material		Granite

Note: While the appearance of the natural stone measuring table varies according to the source, the high stability for which this material is known can always be relied upon.

SV-M3000CNC SPECIFICATIONS

Model No.			SV-M3000CNC
X1 axis (drive unit)	Measuring range		200 mm
	Resolution		0.05 µm
	Scale type		Reflective-type linear encoder
	Drive speed	CNC mode	Max. 200 mm/s
		Joystick mode	0 to 50 mm/s
	Measuring speed		0.02, 0.05, 0.1, 0.2, 0.5, 1.0, 2.0 mm/s
	Straightness	When using a standard detector	0.5 µm/200 mm
Z2 axis (column)	Measuring range		500 mm
	Resolution		0.05 µm
	Scale type		Reflective-type linear encoder
	Drive speed	CNC mode	Max. 200 mm/s
		Joystick mode	0 to 50 mm/s
Y axis	Measuring range		800 mm
	Resolution		0.05 µm
	Scale type		Reflective-type linear encoder
	Drive speed	CNC mode	Max. 200 mm/s
		Joystick mode	0 to 50 mm/s
	Measuring speed		0.02 to 2 mm/s
	Straightness	When using a standard detector holder	Narrow range 0.5 µm/50 mm
			Wide range 2 µm/800 mm
Base unit	Base size (width×depth)		600×1500 mm
	Base material		Steel
	Maximum table loading		300 kg



Refer to the CNC Form Measuring Instrument Series Brochure (**E15021**) for more details.

Mitutoyo reserves the right to change any or all aspects of any product specification, including prices, designs and service content, without notice.

MeasurLink® ENABLED
Data Management Software by Mitutoyo

PROPRIETARY INSPECTION CERTIFICATE

Contracer CV-2100
SERIES 218 — Contour Measuring Instruments

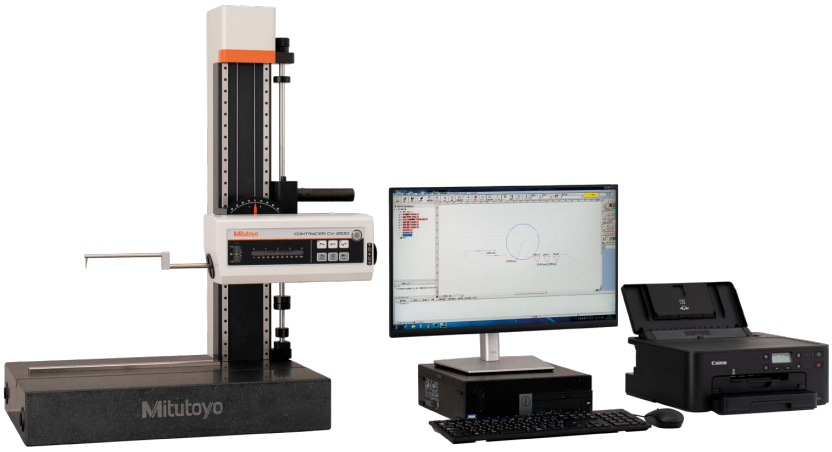

CV-2100M4

Contour Measuring System enabling measurement that is fast, accurate, and easy.

- The operation flow is significantly shortened by arranging the controls for stylus position change, measurement start/stop and return on the front of the drive unit.



Centralized front control panel

- Fine and coarse X-axis positioning can be performed easily by using the jog shuttle that covers the whole measuring range.



Motor-driven jog shuttle

- The quick-vertical-motion stand allows operators to swiftly and easily move the drive unit to and from the measurement height without having to push or pull (only for **CV-2100M4**).



Quick-vertical-motion stand

- The detector unit (Z1 axis) is equipped with a highly accurate arc scale. This scale directly tracks the arc locus of the stylus tip so that the most accurate compensation can be applied to the scale output, which leads to higher accuracy and resolution. Operators are free from bothersome operations such as measurement magnification switching and calibrating each magnification as required for analog instruments.

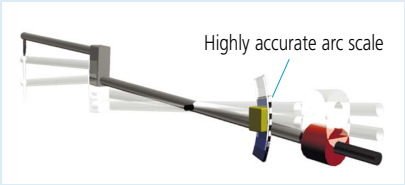

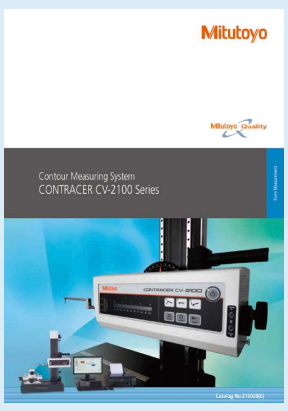

Refer to the Contracer **CV-2100** Series Brochure (**E15020**) for more details.

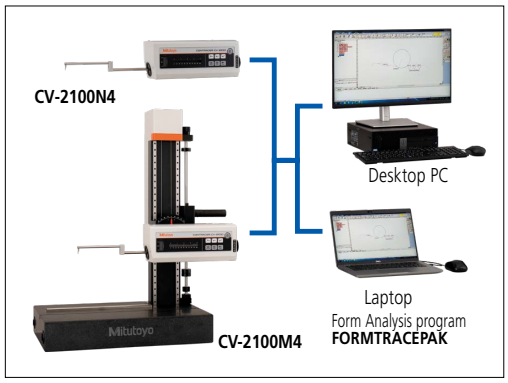

Optional Column Stand for CV-2100N4

- Allows the use of the **CV-2100N4** in a fixed configuration.

218-042

Base material: Granite
Inclination range: ±45°
Vertical travel: 320 mm
Mass: 110 kg
Note: While the appearance of the natural stone measuring table varies according to the source, the high stability for which this material is known can always be relied upon.



SPECIFICATIONS

Model No.		CV-2100M4	CV-2100N4
Measuring range	X axis	100 mm	
	Z1 axis (detector unit)	50 mm	
Z2-axis (column) travel range		350 mm	—
X-axis inclination angle		±45°	
Resolution	X axis	0.1 µm	
	Z1 axis	0.1 µm	
Drive method	X axis	Motor (0 to 20 mm/s)	
	Vertical travel (Z-axis column)	Manual (Quick-vertical-motion, fine)	—
Measuring speed		0.02, 0.05, 0.1, 0.2, 0.5, 1.0, 2.0, 5.0 mm/s	
Straightness (when the X axis is horizontal)		2.5 µm/100 mm	
Accuracy (20 °C)	X axis	±(2.5+0.02L) µm L = Measurement Length (mm)	
	Z1 axis	±(2.5+|0.1H|) µm H = Measurementt height from horizontal position within ±25 mm	
Measuring direction		Both pulling and pushing directions	
Measuring face direction		Downward direction	
Measuring force		30±10 mN (3 gf)	
Traceable angle (using the standard stylus)		Ascent 77°, Descent 87° (according to surface property)	
External dimensions (W×D×H)		745×450×885 mm	651×143×138.5 mm
Mass		145.8 kg	5.8 kg

Note 1: While the appearance of the natural stone measuring table varies according to the source, the high stability for which this material is known can always be relied upon.
Note 2: For the **CV-2100N4**, a manual column stand (optionally available) or custom fixture is required.

L

Mitutoyo reserves the right to change any or all aspects of any product specification, including prices, designs and service content, without notice.

Mitutoyo

MeasurLink® ENABLED
Data Management Software by Mitutoyo

PROPRIETARY INSPECTION CERTIFICATE

FORMTRACER Avant S3000 Series
SERIES 178 — Surface Texture Measuring Instruments



FTA-S4S3000

- **FORMTRACER Avant S3000** Series are highly functional and user-friendly surface roughness measuring systems with innovative design features.
- **The FORMTRACER Avant S3000** Series includes models with inclined drive unit. Inclining the drive unit makes it easier to approach target surfaces and measure large workpieces.



Inclined drive unit

- Equipped with an operability focused, new style remote box. The new part program key strongly supports manual part-programming.
- High throughput is achieved thanks to high drive speed (X axis: Max. 80 mm/s, Z2 axis: Max. 30 mm/s) and acceleration (X axis: 30 mm/s^2).
- All connecting cables are contained within the measuring instrument to eliminate any inconvenience during measurement.
- The Z1-axis detector is equipped with a built-in anti-collision safety device.
- A variety of detector holders (optional) are available.
- A detector for measuring contours can be retrofitted.





Large sized base models and high-column models are added to the line-up.



Remote box with user-friendly operability



Detector holder (optional)



Refer to the **FORMTRACER Avant** Series Brochure (**E15030**) for more details.

SPECIFICATIONS

Model No.		FTA-S4S3000	FTA-H4S3000	FTA-W4S3000	FTA-L4S3000	FTA-S8S3000	FTA-H8S3000	FTA-W8S3000	FTA-L8S3000
Measuring range	X axis	100 mm				200 mm			
	Z1 axis	800 µm, 80 µm, 8 µm							
Straightness (when the X axis is horizontal)		(0.05+0.001L) µm L = Measurement Length (mm)				(0.1+0.002L) µm L = Measurement Length (mm)			
X-axis inclination angle		±45° (Only for models with X-axis inclining drive unit)							
Z2-axis (column) travel range		300 mm	500 mm		700 mm	300 mm	500 mm		700 mm
Base size (W×D)		60×450 mm		1000×450 mm		600×450 mm		1000×450 mm	
Base material		Granite							

Note: While the appearance of the natural stone measuring table varies according to the source, the high stability for which this material is known can always be relied upon.

Mitutoyo reserves the right to change any or all aspects of any product specification, including prices, designs and service content, without notice.

MeasurLink® ENABLED
Data Management Software by Mitutoyo

PROPRIETARY INSPECTION CERTIFICATE

FORMTRACER Avant C3000/4000 Series
SERIES 218 — Surface Texture Measuring Instruments

- **FORMTRACER Avant C3000/4000** Series are highly functional and user-friendly contour measuring systems with innovative design features.
- **FORMTRACER Avant C3000/4000** Series comes with the inclined drive unit as standard, making approach to the target surface and measurement of large workpieces much easier.


Inclined drive unit

- Equipped with an operability focused, new style remote box. The new part program key strongly supports manual part-programming.
- High throughput is achieved thanks to high drive speed (X axis: Max. 80 mm/s, Z2 axis: Max. 30 mm/s) and acceleration (X axis: 30 mm/s^2).
- All connecting cables are contained within the measuring instrument to eliminate any inconvenience during measurement.
- The Z1-axis detector is equipped with a built-in anti-collision safety device.
- A detector for measuring roughness can be retrofitted.
- The arm of the detector is a user-friendly, magnetic, one-touch, detachable mechanism.
- **C4000** type is a highly functional contour measuring system that has a wide-range digital detector (measuring range: 60 mm), top/bottom plane continuous measurement function, automatic variable measuring force function, and stylus drop detection function.



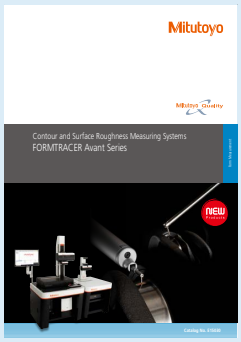

Refer to the **FORMTRACER Avant** Series Brochure (**E15030**) for more details.



FTA-S4C3000



FTA-S4C4000



Large sized base models and high-column models are added to the line-up.



Remote box with user-friendly operability



Detector

SPECIFICATIONS

Model No.			FTA-S4C3000 / FTA-S4C4000	FTA-H4C3000 / FTA-H4C4000	FTA-W4C3000 / FTA-W4C4000	FTA-L4C3000 / FTA-L4C4000	FTA-S8C3000 / FTA-S8C4000	FTA-H8C3000 / FTA-H8C4000	FTA-W8C3000 / FTA-W8C4000	FTA-L8C3000 / FTA-L8C4000
Measuring range		X axis	100 mm				200 mm			
		Z1 axis	60 mm (±30 mm in horizontal situation)							
Straightness (when the X axis is horizontal)			0.8 µm/100 mm				2 µm/200 mm			
Accuracy (20 °C)	C3000	X axis	(0.8+0.01L) µm L = Measurement Length (mm)				(0.8+0.015L) µm L = Measurement Length (mm)			
		Z1 axis (detector unit)	±(1.2+|2H|/100) µm H = Measurement height from the horizontal position (mm)							
	C4000	X axis	(0.8+0.01L) µm L = Measurement Length (mm)				(0.8+0.015L) µm L = Measurement Length (mm)			
		Z1 axis (detector unit)	±(0.8+|2H|/100) µm H = Measurement height from the horizontal position (mm)							
X-axis inclination angle			±45°							
Z2-axis (column) travel range			300 mm	500 mm		700 mm	300 mm	500 mm		700 mm
Base size (W×D)			600×450 mm		1000×450 mm		600×450 mm		1000×450 mm	
Base material			Granite							

Note: While the appearance of the natural stone measuring table varies according to the source, the high stability for which this material is known can always be relied upon.

Mitutoyo reserves the right to change any or all aspects of any product specification, including prices, designs and service content, without notice.

Mitutoyo

MeasurLink® ENABLED
Data Management Software by Mitutoyo

PROPRIETARY INSPECTION CERTIFICATE

FORMTRACER Avant D3000/4000 Series
SERIES 525 — Surface Texture Measuring Instruments



FTA-S4D3000
(Detector for surface roughness measurement attaching example, Inclined drive unit, with monitor arm)



FTA-S4D3000
(Detector for form/contour measurement attaching example, Inclined drive unit, with monitor arm)

- **FORMTRACER Avant D3000/4000** Series are highly functional and user-friendly surface texture measuring systems with innovative design features. Both surface roughness measurement and contour measurement are available on a single system just by replacing the detector.
- The contour/roughness detector can be replaced without turning off the controller power and without using any tool. Furthermore, the detector is recognized automatically.
- **FORMTRACER Avant D** Series comes with the inclined drive unit as standard, making approach to the target surface and measurement of large workpieces much easier.
- Equipped with an operability focused, new style remote box. The new part program key strongly supports manual part-programming.
- High throughput is achieved thanks to high drive speed (X axis: Max. 80 mm/s, Z2 axis: Max. 30 mm/s) and acceleration (X axis: 30 mm/s^2).
- All connecting cables are contained within the measuring instrument to eliminate any inconvenience during measurement.
- The Z1-axis detector is equipped with a built-in anti-collision safety device.
- The arm of the detector for contour measurement is a magnetic, one-touch, detachable mechanism.
- **D4000** type is a highly functional contour measuring system with a digital detector (measuring range: 60 mm) that enables wide range measurement, top/bottom plane continuous measurement function, automatic variable measuring force function, and stylus drop detection function.



Large sized base models and high-column models are added to the line-up.



Inclined drive unit



Connecting cables are contained within the measuring instrument.



Remote box with user-friendly operability



Detector holder (optional)



Detector

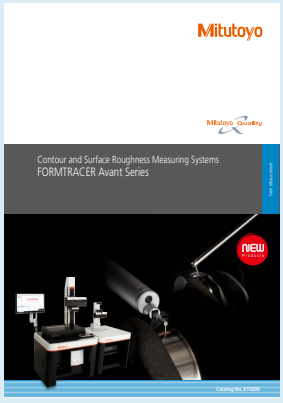

Refer to the **FORMTRACER Avant** Series Brochure (**E15030**) for more details.

SPECIFICATIONS

Model No.			FTA-S4D3000 / FTA-S4D4000	FTA-H4D3000 / FTA-H4D4000	FTA-W4D3000 / FTA-W4D4000	FTA-L4D3000 / FTA-L4D4000	FTA-S8D3000 / FTA-S8D4000	FTA-H8D3000 / FTA-H8D4000	FTA-W8D3000 / FTA-W8D4000	FTA-L8D3000 / FTA-L8D4000
Surface roughness measurement										
Measuring range		X axis	100 mm				200 mm			
		Z1 axis	800 µm, 80 µm, 8 µm							
Straightness (when the X axis is horizontal)			(0.05+0.001L) µm L = Measurement Length (mm)				(0.1+0.002L) µm L = Measurement Length (mm)			
Contour measurement										
Measuring range		X axis	100 mm				200 mm			
		Z1 axis	60 mm (±30 mm in horizontal situation)							
Straightness (when the X axis is horizontal)			0.8 µm/100 mm				2 µm/200 mm			
Accuracy (20 °C)	D3000	X axis	(0.8+0.01L) µm L = Measurement Length (mm)				(0.8+0.015L) µm L = Measurement Length (mm)			
		Z1 axis (detector unit)	±(1.2+|2H|/100) µm H = Measurement height from the horizontal position (mm)							
	D4000	X axis	(0.8+0.01L) µm L = Measurement Length (mm)				(0.8+0.015L) µm L = Measurement Length (mm)			
		Z1 axis (detector unit)	±(0.8+|2H|/100) µm H = Measurement height from the horizontal position (mm)							
Common specifications										
X-axis inclination angle			±45°							
Z2-axis (column) travel range			300 mm	500 mm		700 mm	300 mm	500 mm		700 mm
Base size (W×D)			600×450 mm		1000×450 mm		600×450 mm		1000×450 mm	
Base material			Granite							

Note: While the appearance of the natural stone measuring table varies according to the source, the high stability for which this material is known can always be relied upon.

Mitutoyo reserves the right to change any or all aspects of any product specification, including prices, designs and service content, without notice.

MeasurLink® ENABLED
Data Management Software by Mitutoyo

PROPRIETARY INSPECTION CERTIFICATE

CS-3300 Series
SERIES 525 — Surface Texture Measuring Instruments

- **CS-3300** Series are highly functional and user-friendly surface texture measuring systems with innovative design features. They enable simultaneous measurement of both surface roughness and contour without changing the detector.
- Large sized base models and high-column models are newly added to the line-up.
- Equipped with a wide range and high resolution Z1-axis detector.
- **CS-3300** Series comes with the inclined drive unit as standard, making approach to the target surface and measurement of large workpieces much easier.
- Equipped with an operability focused, new style remote box. The new part program key strongly supports manual part-programming.
- High throughput is achieved thanks to high drive speed (X axis: Max. 80 mm/s, Z2 axis: Max. 30 mm/s).
- All connecting cables are contained within the measuring instrument to eliminate any inconvenience during measurement.
- The Z1-axis detector is equipped with a built-in anti-collision safety device.



CS-3300H8



CS-3300H8
(With monitor arm)

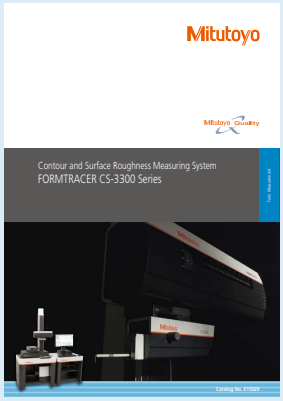

Refer to the FORMTRACER **CS-3300** Series Brochure (**E15029**) for more details.



Inclinable drive unit



Detector sliding mechanism



Connecting cables are contained within the measuring instrument.

L

SPECIFICATIONS

Model No.			CS-3300S4	CS-3300H4	CS-3300W4	CS-3300L4	CS-3300S8	CS-3300H8	CS-3300W8	CS-3300L8
Measuring range	X axis		100 mm				200 mm			
	Z1 axis		5 mm (±2.5 mm in horizontal situation)							
Straightness (when the X axis is horizontal)			0.2 μm/100 mm				0.6 μm/200 mm			
Accuracy (20 °C)	X axis		±(0.8+0.01L) μm L = Measurement Length (mm)				(0.8+0.015L) μm L = Measurement Length (mm)			
	Z1 axis (detector unit)		±(1.5+|2H|/100) μm H = Measurement height from the horizontal position (mm)							
Detector (Z1 axis)	Detection method		Differential inductance							
	Measuring force		0.75 mN							
	Stylus tip	Standard	Tip radius 2 μm, Tip angle 60°, Diamond (surface roughness/contour)							
		Cone	Tip radius 25 μm, Tip angle 30°, Sapphire (contour)							
	Stylus up/down		Available (stoppable at mid-stroke if required)							
X-axis inclination angle			±45°							
Z2-axis (column) travel range			300 mm	500 mm		700 mm	300 mm	500 mm		700 mm
Base size (W×D)			600×450 mm		1000×450 mm		600×450 mm		1000×450 mm	
Base material			Granite							

Note: While the appearance of the natural stone measuring table varies according to the source, the high stability for which this material is known can always be relied upon.

Mitutoyo reserves the right to change any or all aspects of any product specification, including prices, designs and service content, without notice.

Mitutoyo

MeasurLink® ENABLED
Data Management Software by Mitutoyo

PROPRIETARY INSPECTION CERTIFICATE

Formtracer Extreme
SV-C4500CNC/SV-C4500CNC HYBRID TYPE1
SERIES 525 — CNC Surface Roughness and Contour Measuring Systems



SV-C4500CNC (Contour detector shown mounted together with the inclinable drive unit and Y-axis table)



SV-C4500CNC HYBRID TYPE1
(Mounting example of non-contact detector)

SV-C4500CNC SPECIFICATIONS

Model No.			SV-C4500CNC
X1 axis (Drive unit)		Measuring range	200 mm
		Resolution	0.05 µm
		Scale type	Reflective-type linear encoder
	Contour	Straightness	2 µm/200 mm
		Accuracy (20 °C)	±(0.8+4L/200) µm L: Measuring length (mm)
	Surface roughness	Straightness	0.5 µm/200 mm
Z1 axis (Detector)	Contour	Measuring range	60 mm (±30 mm from the horizontal)
		Resolution	0.02 µm
		Scale type	Arc
		Accuracy (20 °C)	±(0.8+|2H|/100) µm H: Measuring height from horizontal position (mm)
	Surface roughness	Measuring range	800 µm, 80 µm, 8 µm
		Resolution	0.01 µm, 0.001 µm, 0.0001 µm
Z2 axis (Column)		Drive range	Specification is selectable from 300 mm or 500 mm.
		Resolution	0.05 µm

Note: While the appearance of the natural stone measuring table varies according to the source, the high stability for which this material is known can always be relied upon.

SV-C4500CNC HYBRID TYPE1 SPECIFICATIONS

Model No.			SV-C4500CNC HYBRID TYPE1
X1 axis (Drive unit)		Measuring range	200 mm
		Resolution	0.05 µm
		Scale type	Reflective-type linear encoder
	Contour	Straightness (20 °C)	2 µm/200 mm
		Accuracy	±(0.8+4L/200) µm L: Measuring length (mm)
	Surface roughness	Straightness	0.5 µm/200 mm
	Non-contact type	Straightness	0.5 µm/200 mm
		Accuracy	±(0.8+4L/200) µm L: Measuring length (mm)
Y axis		Measuring range	200 mm
		Resolution	0.05 µm
		Maximum table loading	20 kg
Z1 axis	Contour	Measuring range	60 mm (±30 mm from the horizontal)
		Resolution	0.02 µm
		Scale type	Arc
		Accuracy (20 °C)	±(0.8+|2H|/100) µm H: Measuring height from horizontal position (mm)
	Surface roughness	Measuring range	800 µm, 80 µm, 8 µm
		Resolution	0.01 µm, 0.001 µm, 0.0001 µm
	Non-contact type detector **CPS2525***	Measuring range	1.2 mm
		Resolution	25 nm
	Non-contact type detector **CPS0517***	Measuring range	0.1 mm
		Resolution	5 nm
Z2 axis		Drive range	500 mm
		Resolution	0.05 µm

* Select either **CPS2525** or **CPS0517**.

Note: While the appearance of the natural stone measuring table varies according to the source, the high stability for which this material is known can always be relied upon.

SV-C4500CNC

- High-accuracy stylus type CNC Surface Roughness/Contour Measuring System that allows measurement of surface roughness and form/contour with one unit through detector replacement.
- For models with the α axis, it is possible to perform continuous measurement over horizontal and inclined surfaces by power-tilting the X1 axis. In addition, automatic measuring force adjustment function of Z1-axis detector for contour measurement enables automatic measurement with constant measuring force even with the X1-axis tilted.
- For models with the Y-axis table, it is possible to expand the measuring range for multiple workpieces through positioning in the Y-axis direction.
- Since the Z1-axis detector incorporates an anti-collision safety device, the machine will automatically stop if the detector touches a workpiece or jig.
- Optional external control function (Ext I/O) through bidirectional communication (RS-232C) with the PLC (programmable logic controller) is available.

SV-C4500CNC HYBRID TYPE1

- CNC Surface Roughness/Contour Measuring System equipped with a non-contact type detector as well as a contact type surface roughness contour measuring detector.
- Equipped with the Y-axis table, it is possible to expand the measuring range for multiple workpieces through positioning in the Y-axis direction.
- Since the Z1-axis detector incorporates an anti-collision safety device, the machine will automatically stop if the detector touches a workpiece or jig.
- Optional external control function (Ext I/O) through bidirectional communication (RS-232C) with the PLC (programmable logic controller) is available.

Mitutoyo reserves the right to change any or all aspects of any product specification, including prices, designs and service content, without notice.

MeasurLink® ENABLED
Data Management Software by Mitutoyo

PROPRIETARY INSPECTION CERTIFICATE

Formtracer Extreme
CS-5000CNC/CS-H5000CNC
SERIES 525 — CNC Surface Roughness and Contour Measuring Systems

- High-accuracy stylus type CNC Surface Measuring System that allows batch measurement of surface roughness and form/contour.
- The X1 and Z2 axes have maximum drive speeds of 40 mm/s and 200 mm/s, respectively. This permits high-speed positioning that can potentially result in a large increase in the throughput of multiple-profile/multiple-workpiece measurement tasks.
- The high resolution linear encoder is incorporated in the X1 and Z1 axes so that high resolution is achieved and batch measurement of form/contour and surface roughness can be made.
- The active control method is employed for the Z1-axis detector to implement a wide-range measurement capability wherein the variation in dynamic measuring force is restricted.
- Since the Z1-axis detector incorporates an anti-collision safety device, the detector unit will automatically stop if it touches a workpiece or fixture.
- For models with the α axis, it is possible to perform continuous measurement over horizontal and inclined surfaces by power-tilting the X1 axis. (**CS-5000CNC** only)
- For models with the Y-axis table, it is possible to expand the measuring range for multiple workpieces through positioning in the Y-axis direction.
- Optional external control function (Ext I/O) through bidirectional communication (RS-232C) with the PLC (programmable logic controller) is available.



CS-H5000CNC
(with Y-axis table)

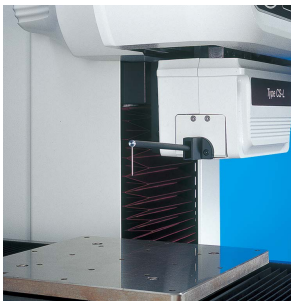

Wide-range detector employing active control technology

SPECIFICATIONS

Model No.			CS-5000CNC	CS-H5000CNC
X1 axis	Measuring range		200 mm	
	Resolution		0.005 µm	
	Scale type		Transmission-type linear encoder	
	Drive speed	CNC mode	Max. 40 mm/s	
		Joystick mode	0 to 40 mm/s	
	Measuring speed		0.02, 0.05, 0.1, 0.2 mm/s (surface roughness), 0.02, 0.05, 0.1, 0.2, 0.5, 1.0, 2.0 mm/s (form/contour)	
	Measuring direction		Forward/backward	
	Straightness	with standard stylus	(0.1+0.0015L) µm L: traverse length (mm)	(0.05+0.0003L) µm L: traverse length (mm)
		with 2X-long stylus	(0.2+0.0015L) µm L: traverse length (mm)	(0.1+0.0015L) µm L: traverse length (mm)
	Accuracy (20 °C)		±(0.3+0.002L) µm L: traverse length (mm)	±(0.16+0.001L) µm L: traverse length (mm)
α axis	Inclination range		-45° (CCW), +10° (CW)	—
Z1 axis (Detector)	Measuring range	with standard stylus	12 mm	
		with 2X-long stylus	24 mm	
	Resolution	with standard stylus	0.0008 µm	
		with 2X-long stylus	0.0016 µm	
	Vertical movement of the stylus		Arc motion	
	Scale type		Transmission-type linear encoder	
	Accuracy (20 °C)		±(0.3+|0.02H|) µm H: probing height (mm)	±(0.07+|0.02H|) µm H: probing height (mm)
	Measuring force	with standard stylus	4 mN (Fixed)	
		with 2X-long stylus	0.75 mN (Fixed)	
	Traceable angle		Ascent: 60°, Descent: 60° (Depends on the surface texture.)	
	Stylus tip shape	Standard stylus	Tip radius: 5 µm, Tip angle: 40°, Diamond	
		Standard ball stylus	Tip ball radius: 0.25 mm, Sapphire	
		2X-long stylus	Tip radius: 5 µm, Tip angle: 40°, Diamond	
		2X-long stylus	—	Tip radius: 2 µm, Tip angle: 60°, Diamond tip
		2X-long ball stylus	Tip ball radius: 0.25 mm, Sapphire	
	Face of stylus		Downward	
Z2 axis (Column)	Travel range	Z2 axis (column, type S)	300 mm	
		Z2 axis (column, type H)	500 mm	
	Resolution		0.05 µm	
	Scale type		Reflective-type linear encoder	
	Drive speed	CNC mode	Max. 200 mm/s	
		Joystick mode	0 to 50 mm/s	
Base	Base size (W×D)		750×600 mm	
	Base material		Granite	

Note: While the appearance of the natural stone base varies according to the source, the high stability for which this material is known can always be relied upon.

Mitutoyo reserves the right to change any or all aspects of any product specification, including prices, designs and service content, without notice.

Mitutoyo

Surface Roughness/Contour Analysis Program FORMTRACEPAK

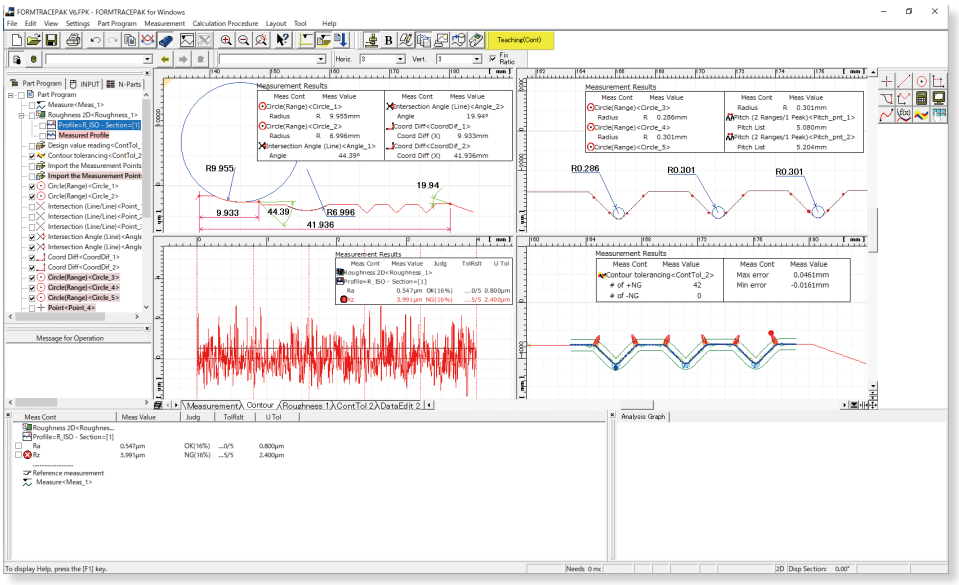

- **FORMTRACEPAK** functions offer total support for controlling the measurement system, surface roughness analysis, contour analysis, contour tolerancing, and inspection report creation.

• Editing measurement procedures

The items displayed in the measurement procedure window can be directly modified. You can, for example, perform new analyses by modifying the evaluation setup or roughness standard.

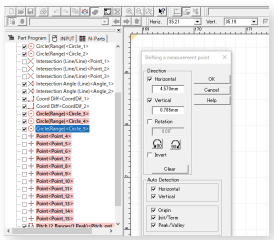

• Operation messaging

The operation message window for explaining the next step is incorporated.

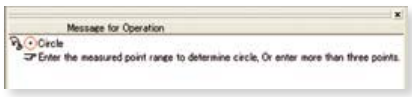

• Measurement control

To make only a single measurement, you can create a part program in the single mode. To measure multiple workpieces of an identical shape, you can use the teaching mode. Since you can embed the entire flow, from making measurement to printing a report, into a part program, you can efficiently make measurements, analyze data, and output a report. A function is also provided that enables you to insert comments accompanied with photographs at desired timings, enabling you to embed the roles described in a measurement procedure document that specifies important points such as work settings.

To make immediate measurements, you can use the pull-down menu to easily select and call up the desired operating procedure.

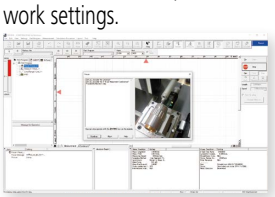

• Versatile graphics windowing for data and analysis

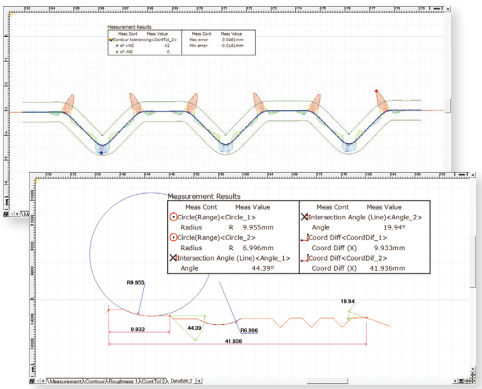

Tab-selection graphics window

Just select a tab to display the measurement data required, such as contour, roughness, or tolerancing results.

Dividing the screen into two or four windows

The screen can be divided into two, or four, windows for the convenient display of measurement data (for contour and roughness), analysis results, and contour tolerancing data, as required.

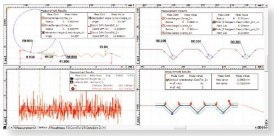

Displaying the results in the graphics window

You can paste the graphics obtained from measurements, as well as measurement values (including pass/fail results) and an analysis graph, into the graphics window. This enables you to check the graphics and measurement results at a glance using the graphics window alone.

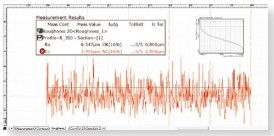

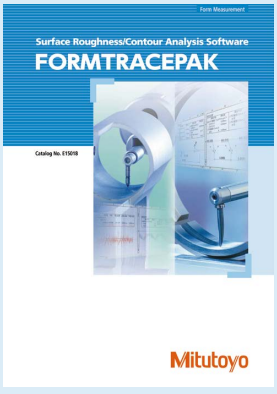

Refer to the **FORMTRACEPAK** Brochure (**E15018**) for more details.

Mitutoyo reserves the right to change any or all aspects of any product specification, including prices, designs and service content, without notice.

• **Online help functions**

Online help that can be viewed any time is incorporated into the software. In addition to index and keyword searches, a status-saving help button, which displays menus and Windows help with a click of the mouse, is provided.

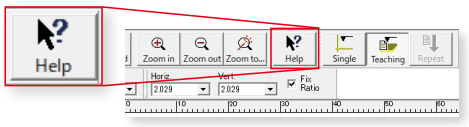

• **Multiple language support (18 languages)**

You can switch the language to be used in the measurement, analysis, and layout windows. After measurements have been made, you can switch to another language and create a report in that language. This function can be used worldwide.

• **Button-editing function**

You can hide buttons that are not used frequently. For example, you can choose to display only those buttons that are used frequently and increase the size of the displayed graphics window, thereby customizing the window to suit your needs.

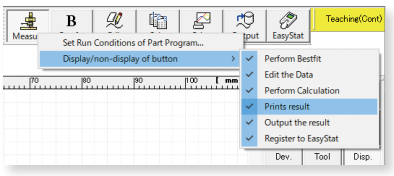

• **Simple statistical commands**

You can perform statistical calculations of roughness parameters and contour analysis results without using a separate program such as Excel.

Contour measurement

• **Contour analysis**

A wide variety of commands, which form the basic elements for analysis, are provided, including those for points (10 types), lines (6 types) and circles (6 types). A rich set of commands that combine these elements to calculate angles, pitches and distances as well as performing contour tolerancing and design value generation are also provided as standard features. These functions, combined with the function that enables you to customize the calculation command buttons by hiding less frequently used commands, help you to tailor the window according to the user's environment.

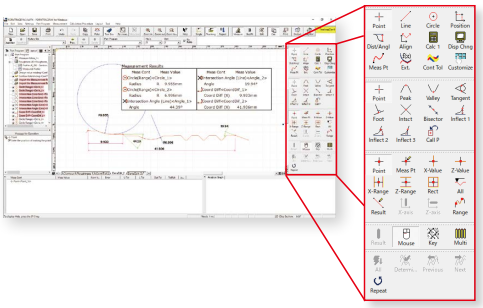

- **Contour-tolerancing as a standard feature**
- **Design value generation**
- **Data combination**
- **Simple pitch calculation**

Surface roughness measurement

• **Surface roughness analysis**

FORMTRACEPAK can perform surface roughness analyses that conform to various standards such as ISO, JIS, ANSI and VDA. For comparing measurement values with the tolerance limits, you can use the 16% rule or the maximum value rule. Furthermore, since **FORMTRACEPAK** comes with parameter calculation functions as well as a rich set of graphic analysis functions, it can be widely utilized for everything from routine quality control to R&D applications. It also includes many other functions such as the function for eliminating (compensating) shapes, such as slopes and radiused surfaces (R-surfaces), and data deletion.

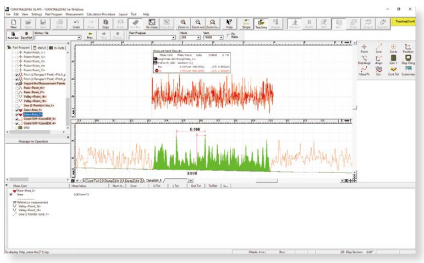

- **Micro contour analysis**
- **Simple input using drawing symbols**
- **Multiple-point measurement**
- **Analysis using multiple-point measurements**
- **Reference length dialog box**
- **Analysis condition modification with preview**
- **R-surface automatic measurement**

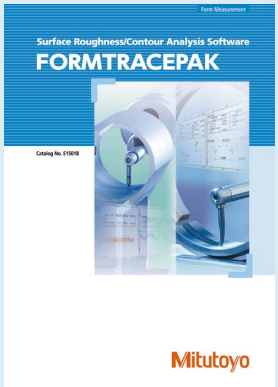

Refer to the **FORMTRACEPAK** Brochure (**E15018**) for more details.

L

Mitutoyo reserves the right to change any or all aspects of any product specification, including prices, designs and service content, without notice.

Quick Guide to Precision Measuring Instruments

Surftest (Surface Roughness Testers)

ISO 4287: 1997 Geometrical Product Specifications (GPS) – Surface Texture: Profile method– Terms, definitions, and surface texture parameters
ISO 4288: 1996 Geometrical Product Specifications (GPS) – Surface Texture: Profile method– Rules and procedures for the assessment of surface texture
ISO 3274: 1996 Geometrical Product Specifications (GPS) – Surface Texture: Profile method– Nominal characteristics of contact (stylus) instruments
ISO 11562: 1996 Geometrical Product Specifications (GPS) – Surface texture: Profile method– Metrological characteristics of phase correct filters

Elements of Contact Type Surface Roughness Measuring Instruments

ISO 3274: 1996 (JIS B 0651: 2001)

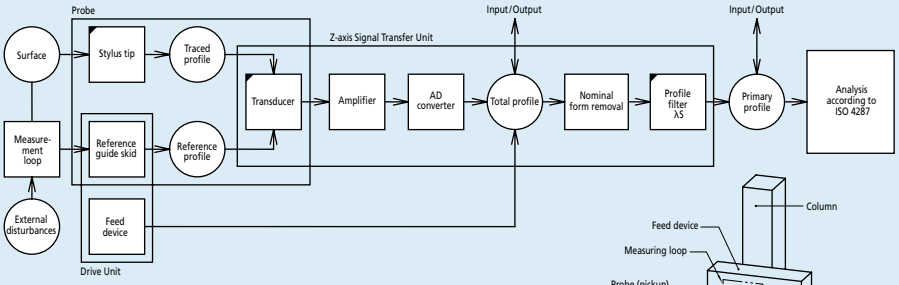

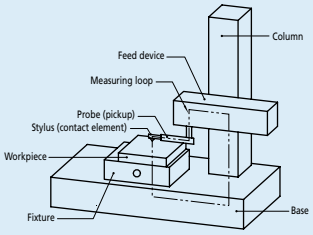

Stylus Shape

A typical shape for a stylus end is conical with a spherical tip.
Tip radius: r_{tip} = 2 µm, 5 µm or 10 µm
Cone angle: 60°, 90°
In typical surface roughness testers, the conical angle of the stylus end is 60° unless otherwise specified.

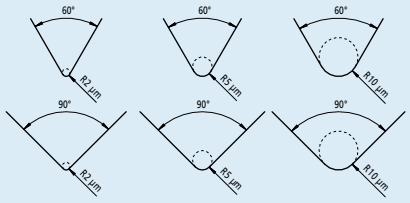

Static Measuring Force

Nominal radius of curvature of stylus tip: µm	Static measuring force at the mean position of stylus: mN	Tolerance on static measuring force variations: mN/µm
2	0.75	0.035
5	0.75 (4.0) *	0.2
10		

* The maximum value of static measuring force at the average position of a stylus is to be 4.0 mN for a probe with a special structure including a replaceable stylus.

Metrological Characterization of Phase Correct Filters

ISO 11562: 1996 (JIS B 0632: 2001)

A profile filter is a phase-correct filter without phase delay (cause of profile distortion dependent on wavelength).
The weight function of a phase-correct filter shows a normal (Gaussian) distribution in which the amplitude transmission is 50% at the cutoff wavelength.

Data Processing Flow

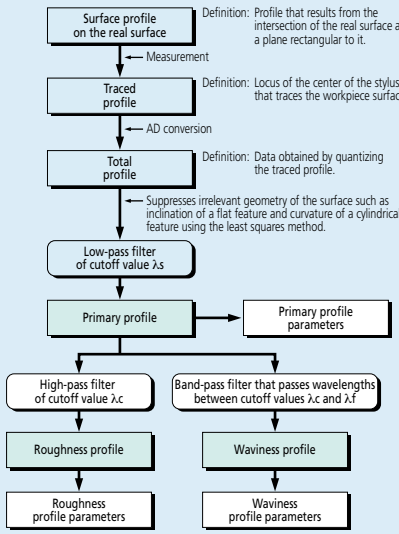

Relationship between Cutoff Value and Stylus Tip Radius

The following table lists the relationship between the roughness profile cutoff value λc, stylus tip radius r_{tip}, and cutoff ratio λc/λs.

λc mm	λs µm	λc/λs	Maximum r_{tip} µm	Maximum sampling length µm
0.08	2.5	30	2	0.5
0.25	2.5	100	2	0.5
0.8	2.5	300	2 *1	0.5
2.5	8	300	5 *2	1.5
8	25	300	10 *2	5

*1 For a surface with Ra>0.5 µm or Rz>3 µm, a significant error will not usually occur in a measurement even if r_{tip} = 5 µm.
*2 If a cutoff value λs is 2.5 µm or 8 µm, attenuation of the signal due to the mechanical filtering effect of a stylus with the recommended tip radius appears outside the roughness profile pass band. Therefore, a small error in stylus tip radius or shape does not affect parameter values calculated from measurements. If a specific cutoff ratio is required, the ratio must be defined.

Surface Profiles

ISO 4287:1997 (JIS B 0601: 2013)

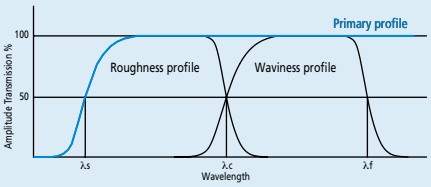

Primary Profile

Profile obtained from the measured profile by applying a low-pass filter with cutoff value λs.

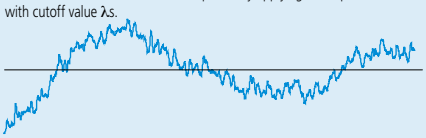

Roughness Profile

Profile obtained from the primary profile by suppressing the longer wavelength components using a high-pass filter of cutoff value λc.



Waviness Profile

Profile obtained by applying a band-pass filter to the primary profile to remove the longer wavelengths above λf and the shorter wavelengths below λc.

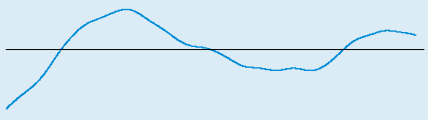

Roughness sampling length for non-periodic profiles

ISO 4288: 1996 (JIS B 0633: 2001)

Table 1: Sampling lengths for aperiodic profile roughness parameters (Ra, Rq, Rsk, Rku, $R\Delta q$), material ratio curve, probability density function, and related parameters

Ra µm	Sampling length l_r mm	Evaluation length l_n mm
(0.006)<Ra≤0.02	0.08	0.4
0.02 <Ra≤0.1	0.25	1.25
0.1 <Ra≤2	0.8	4
2 <Ra≤10	2.5	12.5
10 <Ra≤80	8	40

Table 2: Sampling lengths for aperiodic profile roughness parameters (Rz, Rv, Rp, Rc, Rt)

Rz $Rz1$max. µm	Sampling length l_r mm	Evaluation length l_n mm
(0.025)<Rz, $Rz1$max.≤0.1	0.08	0.4
0.1 <Rz, $Rz1$max.≤0.5	0.25	1.25
0.5 <Rz, $Rz1$max.≤10	0.8	4
10 <Rz, $Rz1$max.≤50	2.5	12.5
50 <Rz, $Rz1$max.≤200	8	40

1) Rz is used for measurement of Rz, Rv, Rp, Rc, and Rt.
2) $Rz1$max. only used for measurement of $Rz1$max., $Rv1$max., $Rp1$max., and $Rc1$max..

Table 3: Sampling lengths for measurement of periodic roughness profile roughness parameters and periodic or aperiodic profile parameter RSm

Rsm mm	Sampling length l_r mm	Evaluation length l_n mm
0.013 <RSm≤0.04	0.08	0.4
0.04 <RSm≤0.13	0.25	1.25
0.13 <RSm≤0.4	0.8	4
0.4 <RSm≤1.3	2.5	12.5
1.3 <RSm≤4	8	40

Procedure for determining a sampling length if it is not specified

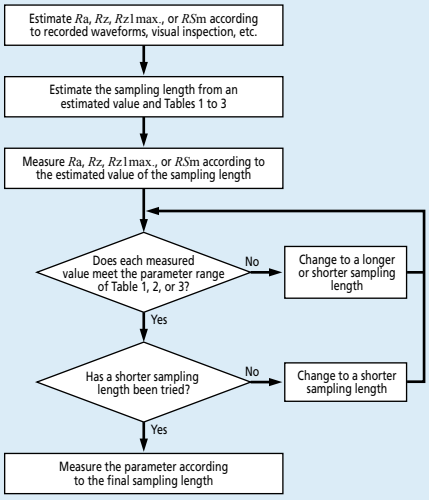

Fig.1 Procedure for determining the sampling length of an aperiodic profile if it is not specified.

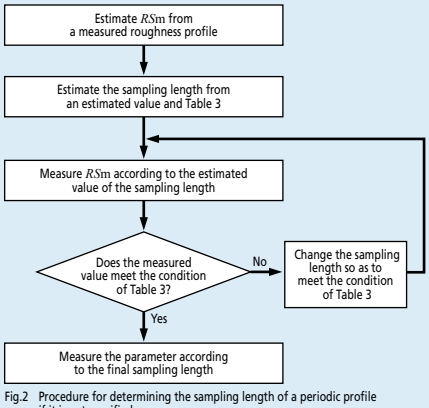

Fig.2 Procedure for determining the sampling length of a periodic profile if it is not specified.

L

Definition of Parameters

ISO 4287: 1997, Amd. 1: 2009 (JIS B 0261: 2013)

Amplitude Parameters (peak and valley)

Maximum peak height of the primary profile *P*p
Maximum peak height of the roughness profile *R*p
Maximum peak height of the waviness profile *W*p

Largest profile peak height *Z*p within a sampling length

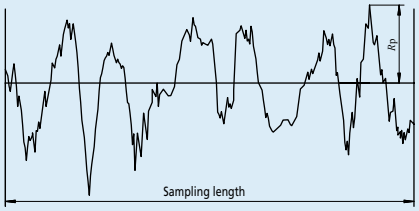

Maximum valley depth of the primary profile *P*v
Maximum valley depth of the roughness profile *R*v
Maximum valley depth of the waviness profile *W*v

Largest profile valley depth *Z*v within a sampling length

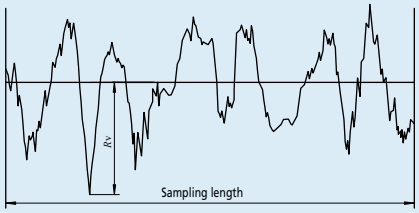

Maximum height of the primary profile *P*z
Maximum height of the roughness profile *R*z
Maximum height of the waviness profile *W*z

Sum of height of the largest profile peak height *Z*p and the largest profile valley depth *Z*v within a sampling length

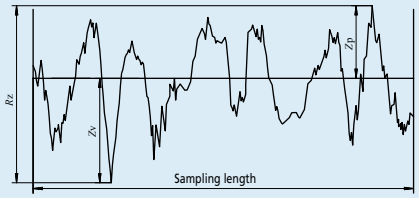

In the old JIS and ISO 4287-1: 1984, *R*z was used to indicate the "ten point height of irregularities". Care must be taken because differences between results obtained according to the existing and old standards are not always negligibly small. (Be sure to check whether the drawing instructions conform to existing or old standards.)

Mean height of the primary profile elements *P*c
Mean height of the roughness profile elements *R*c
Mean height of the waviness profile elements *W*c

Mean value of the profile element heights *Z*t within a sampling length

$$Pc, Rc, Wc = \frac{1}{m}\sum_{i=1}^{m} Zt_i$$

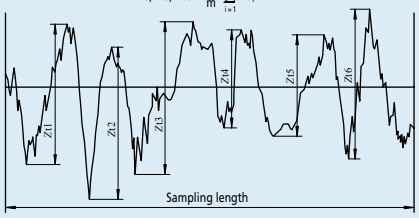

Total height of the primary profile *P*t
Total height of the roughness profile *R*t
Total height of the waviness profile *W*t

Sum of the height of the largest profile peak height *Z*p and the largest profile valley depth *Z*v within the evaluation length

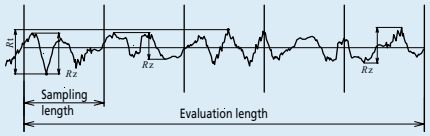

Amplitude Parameters (average of ordinates)

Arithmetical mean deviation of the primary profile *P*a
Arithmetical mean deviation of the roughness profile *R*a
Arithmetical mean deviation of the waviness profile *W*a

Arithmetic mean of the absolute ordinate values Z(x) within a sampling length

$$Pa, Ra, Wa = \frac{1}{l}\int_0^l |Z(x)|dx$$

with l as *l*p, *l*r, or *l*w according to the case.

Root mean square deviation of the primary profile *P*q
Root mean square deviation of the roughness profile *R*q
Root mean square deviation of the waviness profile *W*q

Root mean square value of the ordinate values Z(x) within a sampling length

$$Pq, Rq, Wq = \sqrt{\frac{1}{l}\int_0^l Z^2(x)dx}$$

with l as *l*p, *l*r, or *l*w according to the case.

Skewness of the primary profile *P*sk
Skewness of the roughness profile *R*sk
Skewness of the waviness profile *W*sk

Quotient of the mean cube value of the ordinate values Z(x) and the cube of *P*q, *R*q, or *W*q respectively, within a sampling length

$$Rsk = \frac{1}{Rq^3}\left[\frac{1}{lr}\int_0^{lr} Z^3(x)dx\right]$$

The above equation defines *R*sk. *P*sk and *W*sk are defined in a similar manner. *P*sk, *R*sk, and *W*sk are measures of the asymmetry of the probability density function of the ordinate values.

Kurtosis of the primary profile *P*ku
Kurtosis of the roughness profile *R*ku
Kurtosis of the waviness profile *W*ku

Quotient of the mean quartic value of the ordinate values Z(x) and the fourth power of *P*q, *R*q, or *W*q respectively, within a sampling length

$$Rku = \frac{1}{Rq^4}\left[\frac{1}{lr}\int_0^{lr} Z^4(x)dx\right]$$

The above equation defines *R*ku. *P*ku and *W*ku are defined in a similar manner. *P*ku, *R*ku, and *W*ku are measures of the sharpness of the probability density function of the ordinate values.

Spacing Parameters

Mean width of the primary profile elements *PS*m
Mean width of the roughness profile elements *RS*m
Mean width of the waviness profile elements *WS*m

Mean value of the profile element widths *Xs* within a sampling length

$$PSm, RSm, WSm = \frac{1}{m}\sum_{i=1}^{m} Xs_i$$

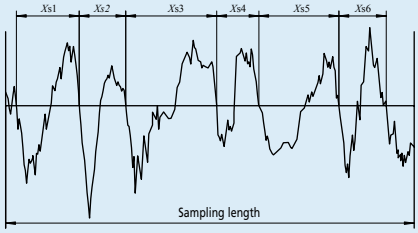

Peak count number based on the primary profile elements *PP*c
Peak count number based on the roughness profile elements *RP*c
Peak count number based on the waviness profile elements *WP*c

$$RPc = \frac{1}{RSm}$$

Hybrid Parameters

Root mean square slope of the primary profile *PΔ*q
Root mean square slope of the roughness profile *RΔ*q
Root mean square slope of the waviness profile *WΔ*q

Root mean square value of the ordinate slope d*Z*/d*X* within a sampling length

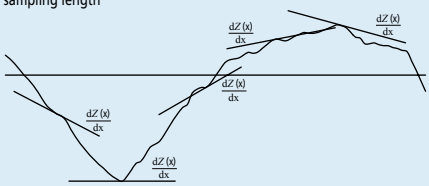

Curves, Probability Density Function, and Related Parameters

Material ratio curve of the profile (Abbott-Firestone curve)

Curve representing the material ratio of the profile as a function of section level c

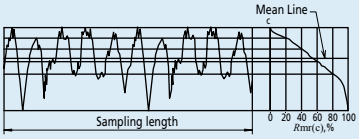

Material ratio of the primary profile *P*mr (c)
Material ratio of the roughness profile *R*mr (c)
Material ratio of the waviness profile *W*mr (c)

Ratio of the material length of the profile elements *Ml* (c) at a given level c to the evaluation length

$$Pmr\,(c), Rmr\,(c), Wmr\,(c) = \frac{Ml(c)}{ln}$$

Section height difference of the primary profile *P*δc
Section height difference of the roughness profile *R*δc
Section height difference of the waviness profile *W*δc

Vertical distance between two section levels of a given material ratio

$$R\delta c = c\,(Rmr1) - c\,(Rmr2);\ Rmr1 < Rmr2$$

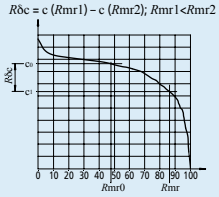

Relative material ratio of the primary profile *P*mr
Relative material ratio of the roughness profile *R*mr
Relative material ratio of the waviness profile *W*mr

Material ratio determined at a profile section level *R*δc related to the reference section level c0

$$Pmr, Rmr, Wmr = Pmr\,(c_1), Rmr\,(c_1), Wmr\,(c_1)$$
where $c_1 = c_0 - R\delta c\,(P\delta c, W\delta c)$
$c_0 = c\,(Pm0, Rmr0, Wmr0)$

Probability density function
(profile height amplitude distribution curve)

Sample probability density function of the ordinate Z(x) within the evaluation length

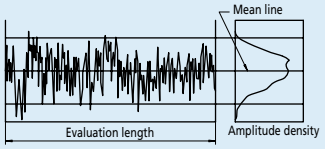

JIS Specific Parameters

Ten-point height of irregularities, *Rz*JIS

Sum of the absolute mean height of the five highest profile peaks and the absolute mean depth of the five deepest profile valleys, measured from the mean line within the sampling length of a roughness profile. This profile is obtained from the primary profile using a phase-correct band-pass filter with cutoff values of lc and ls.

$$Rz_{JIS} = \frac{|Zp_1+Zp_2+Zp_3+Zp_4+Zp_5| + |Zv_1+Zv_2+Zv_3+Zv_4+Zv_5|}{5}$$

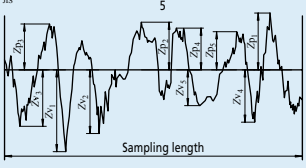

Symbol	Used profile
*Rz*JIS82	Surface profile as measured
*Rz*JIS94	Roughness profile derived from the primary profile using a phase-correct high-pass filter

Arithmetic mean deviation of the profile *Ra*75

Arithmetic mean of the absolute values of the profile deviations from the mean line within the sampling length of the roughness profile (75%). This profile is obtained from a measurement profile using an analog high-pass filter with an attenuation factor of 12db/octave and a cutoff value of λc.

$$Ra_{75} = \frac{1}{ln}\int_0^{ln} |Z(x)|dx$$

Mitutoyo

Traceable Angle

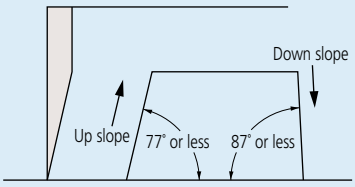

The maximum angle at which a stylus can trace upwards or downwards along the contour of a workpiece, in the stylus travel direction, is referred to as the traceable angle. A one-sided sharp stylus with a tip angle of 12° (as in the above figure) can trace a maximum 77° of up slope and a maximum 87° of down slope. For a conical stylus (30° cone), the traceable angle is smaller. An up slope with an angle of 77° or less overall may actually include an angle of more than 77° due to the effect of surface roughness. Surface roughness also affects the measuring force.

Compensating for Stylus Tip Radius

A recorded profile represents the locus of the center of the ball tip rolling on a workpiece surface. (A typical radius is 0.025 mm.) Obviously this is not the same as the true surface profile so, in order to obtain an accurate profile record, it is necessary to compensate for the effect of the tip radius through data processing.

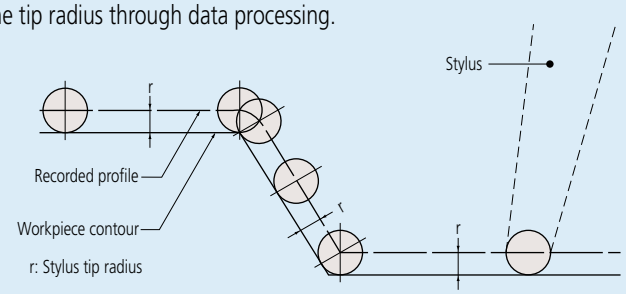

If a profile is read from the recorder through a template or scale, it is necessary to compensate for the stylus tip radius beforehand according to the applied measurement magnification.

Compensating for Arm Rotation

When the stylus traces through a circular-arc, error arises in the X-axis direction of the recorded profile. Possible methods for compensating for this effect are as follows:

1) Mechanical compensation
2) Electrical compensation

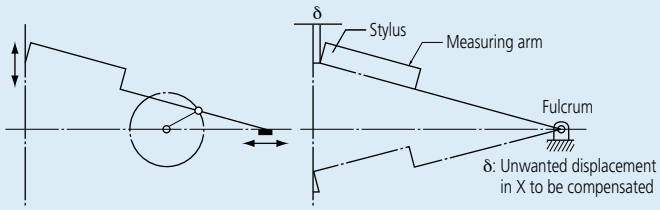

3) Software processing. To measure a workpiece contour that involves a large displacement in the vertical direction with high accuracy, one of these compensation methods needs to be implemented.

Accuracy

As the detector units of the X-and Z-axes incorporate scales, the magnification accuracy is displayed not as a percentage but as the linear displacement accuracy for each axis.

Overload Safety Cutout

If an excessive force (overload) is exerted on the stylus tip due, perhaps, to the tip encountering a too-steep slope on a workpiece feature, or a burr, for example, a safety device automatically stops operation and sounds an alarm buzzer. This type of instrument is commonly equipped with separate safety devices for the tracing direction (X axis) load and vertical direction (Z axis) load.

Circular-Arc / Linear Tracing

The locus traced by the stylus tip during vertical stylus movement can be a circular arc or a straight line. Ensuring a straight-line locus entails complex mechanics, while in the case of a circular-arc locus, if the amplitude of stylus displacement is large in the vertical direction, an error (δ) in the recorded profile in the horizontal direction arises. (See figure at lower left)

Z-axis Measurement Methods

Though the X-axis measurement method commonly adopted is by means of a digital scale, the Z-axis measurement divides into analog methods (using a differential transformer, for example) and digital scale methods.
Analog methods vary in Z-axis resolution depending on the measurement magnification and measuring range. Digital scale methods have fixed resolution.
Generally, a digital scale method provides higher accuracy than an analog method.

Contour analysis methods

You can analyze the contour with one of the following two methods after completing the measurement operation.

Data processing section and analysis program

The measured contour is input into the data processing section in real time and a dedicated program performs the analysis using the mouse and/or keyboard. The angle, radius, step, pitch and other data are directly displayed as numerical values. Analysis combining coordinate systems can be easily performed. The graph that goes through stylus radius correction is output to the printer as the recorded profile.

Tolerancing with Design Data

Measured workpiece contour data can be compared with design data in terms of actual and designed shapes rather than just analysis of individual dimensions. In this technique each deviation of the measured contour from the intended contour is displayed and recorded. Also, data from one workpiece example can be processed so as to become the master design data to which other workpieces are compared. This function is particularly useful when the shape of a section greatly affects product performance, or when its shape has an influence on the relationship between mating or assembled parts.

Best-fitting

If there is a standard for surface profile data, tolerancing with design data is performed according to the standard. If there is no standard, or if tolerancing only with shape is desired, best-fitting between design data and measurement data can be performed.

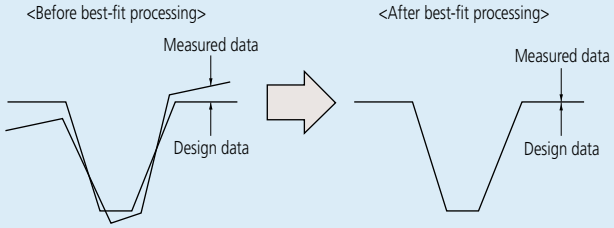

The best-fit processing algorithm searches for deviations between both sets of data and derives a coordinate system in which the sum of squares of the deviations is a minimum when the measured data is overlaid on the design data.

Data Combination

Conventionally, if tracing a complete contour is prevented by stylus traceable-angle restrictions then it has to be divided into several sections that are then measured and evaluated separately. This function avoids this undesirable situation by combining the separate sections into one contour by overlaying common elements (lines, points) onto each other. With this function the complete contour can be displayed and various analyses performed in the usual way.

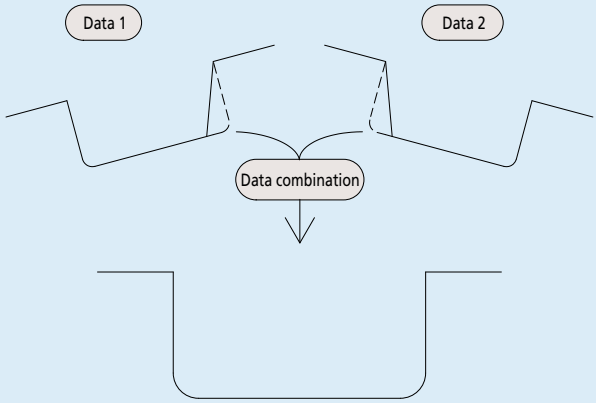

Measurement Examples

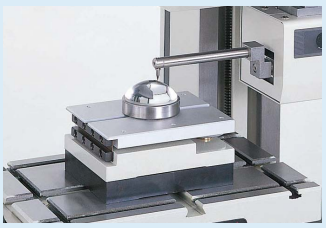
Aspheric lens contour

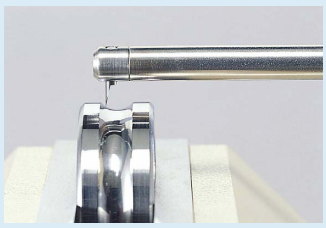
Inner/outer ring contour of a bearing

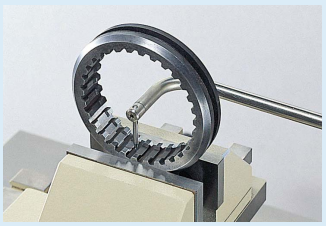
Internal gear teeth

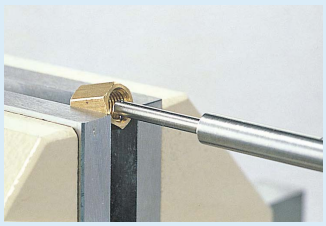
Female thread form


Male thread form

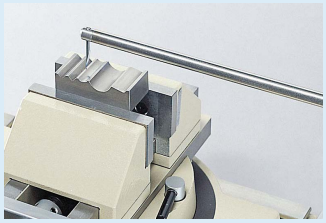
Gage contour

L

Mitutoyo

MeasurLink® ENABLED
Data Management Software by Mitutoyo

PROPRIETARY INSPECTION CERTIFICATE

Roundtest RA-10
SERIES 211 — Roundness Measuring Instrument



RA-10

Simple measurement procedure



Mount the workpiece on the holding fixture.

Position the detector in contact with the workpiece.

Press the "Condition" button as required.

Press the "START/STOP" button.

SPECIFICATIONS

Model No.			RA-10
Turntable	Rotational accuracy (JIS B 7451-1997)	Radial direction	(0.04 + 6H/10000) μm H: Probing height (mm)
		Axial direction	(0.04 + 6X/10000) μm X: distance from the center of rotation (mm)
	Maximum probing diameter		ø100 mm
	Maximum loading mass		10 kg
Vertical movement	Vertical travel		117 mm
X axis	Travel range		75 mm (-25 mm to 50 mm from the rotation center)
Detector*	Measuring range		±1000 μm

* Only the standard length stylus is applicable to this detector. The long type cannot be used.

A cost-effective compact instrument that enables full-scale roundness evaluation.

- Offers easy operation for anyone.
  A large, simple key arrangement is used.
- User-friendly operation.
  Measurement results and recorded profiles are easy to view with the large LCD, and can then be printed by the built-in thermal line printer. Furthermore, optional functions to improve usability can be offered.



Refer to the Roundtest **RA-10** Brochure (**E15019**) for more details.

Roundtest RA-120/120P
SERIES 211 — Roundness Measuring Instruments



RA-120



RA-120P
The analysis capabilities for the various models (**RA-120**/**120P**/**10**) vary. For details, refer to page L-26.

Easy operation, compact and outstanding cost/performance ratio, designed for use on the shop-floor right beside the production line.

- D.A.T. (Digimatic Adjustment Table) function aids adjustments such as centering and leveling, and substantially reduces the time required for preliminary setup operations.

What is the D.A.T. function? <Patented>

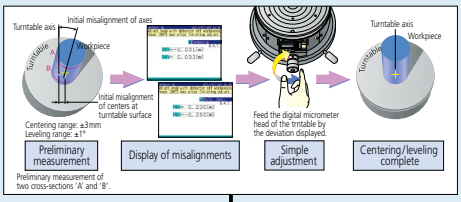

Dedicated analysis unit type (RA-120)

- Compact, lightweight design from incorporating electronic components inside the main unit.

Data analysis by PC (RA-120P)

- **ROUNDPAK**, a data analysis program employs Windows OS and archived higher level of analysis.

SPECIFICATIONS

Model No.			RA-120	RA-120P
Turntable	Rotational accuracy (JIS B 7451-1997)	Radial direction	(0.04 + 6H/10000) μm H: Probing height (mm)	
		Axial direction	(0.04 + 6X/10000) μm X: distance from the center of rotation (mm)	
	Maximum probing diameter*1		ø280 mm (ø380 mm: for the vertical position when detector holder is installed reversely, the maximum probing height is up to 50 mm from the table top.)	
	Maximum loading mass		25 kg	
Vertical movement	Vertical travel		280 mm	
X axis	Travel range		165 mm (-25 mm to 140 mm from the rotation center)	
Detector*2	Measuring range		±1000 μm	

*1 Auxiliary stage for a low-height workpiece (optional) is required for the measurement 20 mm or less in the radial direction from the center point of the table and 20 mm or less from the table top.
*2 Only the standard length stylus is applicable to this detector. The long type cannot be used.



Refer to the Roundtest **RA-120/120P** Brochure (**E15008**) for more details.

Mitutoyo reserves the right to change any or all aspects of any product specification, including prices, designs and service content, without notice.

MeasurLink® ENABLED
Data Management Software by Mitutoyo

PROPRIETARY INSPECTION CERTIFICATE

Roundtest RA-1600
SERIES 211 — Roundness/Cylindricity Measuring System



RA-1600



Detector safety mechanism

- Compact body and a wide measuring range assures precision that compares well with that of higher-grade models.
- D.A.T. (Digital Adjustment Table) function aids manual workpiece centering and leveling.
- Safety mechanism provided in the detection section as a standard feature.
- A sliding mechanism (optional sliding detector holder) can be installed in the detector holder. It enables one-touch measurement of a workpiece with a deep hole having a thick wall, which has been difficult with the standard detector.



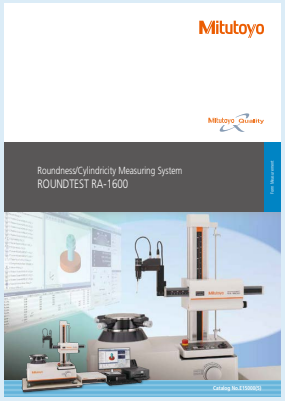

Refer to the Roundtest **RA-1600** Brochure (**E15000**) for more details.

SPECIFICATIONS

Model No.			RA-1600
Turntable	Rotational accuracy (JIS B 7451-1997)	Radial direction	(0.02 + 6H/10000) μm H: Probing height (mm)
		Axial direction	(0.02 + 6X/10000) μm X: Distance from the center of rotation (mm)
	Maximum loading mass		25 kg
	Maximum probing diameter		ø280 mm
Vertical movement (Z-axis column unit)	Vertical travel		300 mm
X axis	Travel range		165 mm (-25 mm to +140 mm from the rotation center)
Detector	Measuring range	Standard	±400 μm/±40 μm/±4 μm
		Tracking	±5 mm

Roundtest RA-2200
SERIES 211 — Roundness/Cylindricity Measuring System



RA-2200AH
System vibration isolator (with side table)



RA-2200AH
System vibration isolator (monitor arm type)*
* Printer table (provided by the customer) not shown.

Achieved the world's highest level of accuracy for this class of machine. A high-performance automatic system equipped with a high-speed automatic centering/leveling function.

- High-speed automatic centering/leveling function contributes to a significant reduction in the man-hours required for setups.
- A fully automatic system which performs processing automatically from part program calling, centering/leveling, measurement, calculation, all the way through to printing.
- Capable of continuous inside/outside diameter measurement without changing the detector orientation (up to 50 mm ID).
- The automatic positioning function of the turntable enables automatic measurement in combination with table rotation and slider/column movement.
- Advanced graphical analysis such as power spectrum chart is available.
- A sliding mechanism is incorporated in the detector holder part.

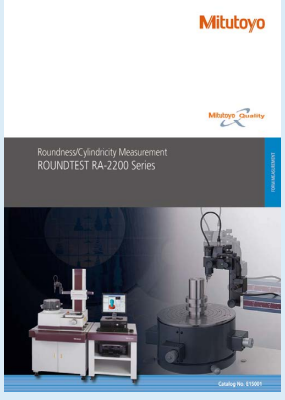

Refer to the Roundtest **RA-2200** Series Brochure (**E15001**) for more details.

SPECIFICATIONS

Model No.			RA-2200AS	RA-2200DS	RA-2200AH	RA-2200DH
Turntable	Rotational accuracy (JIS B 7451-1997)	Radial direction	(0.02 + 3.5H/10000) μm H: Probing height (mm)			
		Axial direction	(0.02 + 3.5X/10000) μm X: Distance from the center of rotation(mm)			
	Maximum loading mass		30 kg			
	Maximum probing diameter		ø300 mm			
Vertical movement (Z-axis column unit)	Vertical travel		300 mm		500 mm	
X axis	Travel range		175 mm (-25 mm to +150 mm from the rotation center)			
Detector	Measuring range	Standard	±400 μm/±40 μm/±4 μm			
		Tracking	±5 mm			

L

Mitutoyo reserves the right to change any or all aspects of any product specification, including prices, designs and service content, without notice.

Mitutoyo

MeasurLink® ENABLED
Data Management Software by Mitutoyo

PROPRIETARY INSPECTION CERTIFICATE

Roundtest RA-H5200
SERIES 211 — Roundness/Cylindricity Measuring System



RA-H5200AS
with side table

SPECIFICATIONS

Model No.			RA-H5200AS	RA-H5200AH
Turntable	Rotational accuracy (JIS B 7451-1997)	Radial direction	(0.02 + 3.5H/10000) µm H: Probing height (mm)	
		Axial direction	(0.02 + 3.5X/10000) µm X: Distance from the center of rotation (mm)	
	Maximum loading mass		80 kg (On auto-centering: 65 kg)	
	Maximum probing diameter		ø400 mm	
Vertical movement (Z-axis column unit)	Vertical travel		350 mm	550 mm
X axis	Travel range		225 mm (-25 mm to +200 mm from the rotation center)	
Detector	Measuring range	Standard	±400 µm/±40 µm/±4 µm	
		Tracking	±5 mm	

A high-performance automatic system equipped with a high-speed automatic centering/leveling function achieves the world's highest-level of accuracy.

- High-speed automatic centering/leveling function contributes to a significant reduction in the man-hours required for setups.

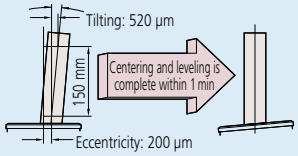

- A fully automatic system which performs processing automatically from part program calling, centering/leveling, measurement, calculation, all the way through to printing.
- Capable of continuous inside/outside diameter measurement without changing the detector orientation (up to 50 mm ID).
- The automatic positioning function of the turntable enables automatic measurement in combination with table rotation and slider/column movement.
- Advanced graphical analysis such as a power spectrum chart is available.
- A sliding mechanism is incorporated in the detector holder.

Roundtest RA-2200 PLUS
SERIES 211 — Roundness/Cylindricity Measuring System







RA-2200AH PLUS
System vibration isolator (with side table)

- The turntable with automatic centering and leveling function is equipped as standard, which frees operators from manual centering and leveling operations.
- Automatic control of holder arm posture (vertical/horizontal) and the rotation feature of the detector (rotates in 1° increments in the range of 0 to 270°) enables continuous measurement of various feature combinations, such as OD/ID and/or top/bottom plane measurements.
- A Mitutoyo linear scale is used in the X-axis drive unit to directly detect the position of the drive unit. It guarantees the highly precise positioning vital for automatic measurement.
- A roughness detector (optional) is supported.

SPECIFICATIONS

Model No.			RA-2200AS PLUS	RA-2200AH PLUS
Turntable	Rotational accuracy (JIS B 7451-1997)	Radial direction	(0.02 + 3.5H/10000) µm H: Probing height (mm)	
		Axial direction	(0.02 + 3.5X/10000) µm X: Distance from the center of rotation (mm)	
	Maximum loading mass		30 kg	
	Maximum probing diameter		ø256 mm	
Vertical movement (Z-axis column unit)	Vertical travel		300 mm	500 mm
X axis	Travel range		175 mm (-25 mm to +150 mm from the rotation center)	
Detector	Measuring range	Standard	±400 µm/±40 µm/±4 µm	
		Tracking	±5 mm	

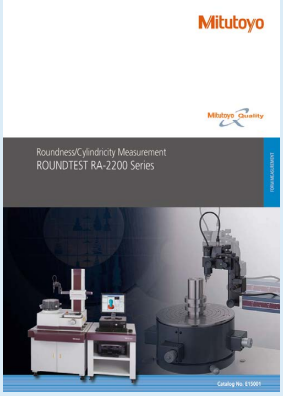

Refer to the Roundtest **RA-2200** Series Brochure (**E15001**) for more details.

Mitutoyo reserves the right to change any or all aspects of any product specification, including prices, designs and service content, without notice.

MeasurLink® ENABLED
Data Management Software by Mitutoyo

PROPRIETARY INSPECTION CERTIFICATE

A fully automated machine with highest-level accuracy that can greatly improve productivity and efficiency.

- The turntable with automatic centering and leveling function is equipped as standard, which frees operators from manual centering and leveling operations.
- Automatic control of holder arm posture (vertical/horizontal) and the rotation feature of the detector (rotates in 1° increments in the range of 0 to 270°) enables continuous measurement of various feature combinations, such as OD/ID and/or top/bottom plane measurements.
- A Mitutoyo linear scale is used in the X-axis drive unit to directly detect the position of the drive unit. It guarantees the highly precise positioning vital for automatic measurement.
- A roughness detector (optional) is supported.

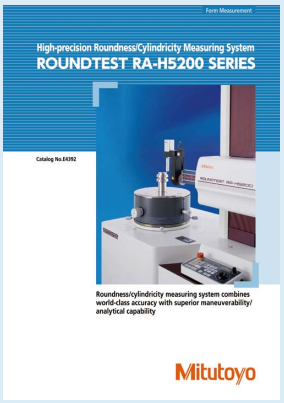

Refer to the Roundtest **RA-H5200** Series Brochure (**E4392**) for more details.

MeasurLink® ENABLED
Data Management Software by Mitutoyo

The best accuracy achieved in the class of large cylindricity measuring machine.

- Loading capacity is 350 kg, and the highest rotational accuracy in the class is achieved. Besides roundness and cylindricity, the flatness can be measured in high accuracy. The workpiece that requires high accuracy measurement such as large and heavy cylindrical parts can be measurement.
- For the ID measurement of a deep hole, such as a main shaft of machine tool, a deep hole measuring unit (specially made, without CNC functions) is available.
- A Mitutoyo linear scale is used in the X-axis drive unit to directly detect the position of the drive unit. It guarantees the highly precise positioning vital for automatic measurement.

Roundtest RA-H5200 PLUS
SERIES 211 — Roundness/Cylindricity Measuring System



RA-H5200AS PLUS
with side table



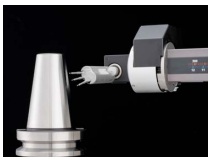



SPECIFICATIONS

Model No.			RA-H5200AS PLUS	RA-H5200AH PLUS
Turntable	Rotational accuracy (JIS B 7451-1997)	Radial direction	(0.02 + 3.5H/10000) µm H: Probing height (mm)	
		Axial direction	(0.02 + 3.5X/10000) µm X: Distance from the center of rotation (mm)	
	Maximum loading mass		80 kg (On auto-centering: 65 kg)	
	Maximum probing diameter		ø356 mm	
Vertical movement (Z-axis column unit)	Vertical travel		350 mm	550 mm
X axis	Travel range		225 mm (-25 mm to +200 mm from the rotation center)	
Detector	Measuring range	Standard	±400 µm/±40 µm/±4 µm	
		Tracking	±5 mm	

Roundtest Extreme RA-6000 CNC
SERIES 211 — CNC Roundness/Cylindricity Measuring System



RA-6000 CNC

SPECIFICATIONS

Model No.			RA-6000 CNC
Turntable	Rotational accuracy *1*2 (JIS B 7451-1997)	Radial direction	(0.05 + 6H/10000) µm H: Probing height (mm)
		Axial direction	(0.05 + 6X/10000) µm X: Distance from the center of rotation (mm)
	Maximum loading mass		350 kg
	Maximum probing diameter		ø880 mm
Vertical movement (Z-axis column unit)	Vertical travel		1050 mm
X axis	Travel range		465 mm (-25 mm travel available from the rotation center)
Detector	Measuring range		±400 µm

*1 The temperature at which the accuracy can be guaranteed is 20 °C.
*2 The rotational accuracy has been obtained when load is applied to the rotation center.

L

MeasurLink® ENABLED
Data Management Software by Mitutoyo

PROPRIETARY INSPECTION CERTIFICATE

ROUNDTRACER EXTREME
SERIES 211 — CNC Roundness/Cylindricity Measuring System



RTX-0605-A

SPECIFICATIONS

Model No.			RTX-0605-A
Turntable	Rotational accuracy (JIS B 7451:1997)	Radial direction	(0.02 + 3.5H/10000) µm H: Probing height (mm)
		Axial direction	(0.02 + 3.5R/10000) µm R: Measuring radius (mm)
	Maximum loading mass		60 kg
	Maximum probing diameter		ø680 mm
Vertical movement (Z-axis column unit)	Travel range		550 mm
X axis	Travel range		197 mm (-33 mm to 164 mm from the rotation center)*
Detectors	Measuring range		±400 µm/±40 µm/±3.6 µm

* Value when the measuring system is mounted with a roundness detector and a standard stylus, and is in the outside diameter measuring position with the stylus at 0°.

- ROUNDTRACER EXTREME models are triple-role CNC profile measuring systems that integrate the roundness and cylindricity measuring capabilities of our ROUNDTEST models and the contour and surface roughness measuring capabilities of our hybrid, dual-role FORMTRACER models to measure surface roughness, contour, roundness, and cylindricity.

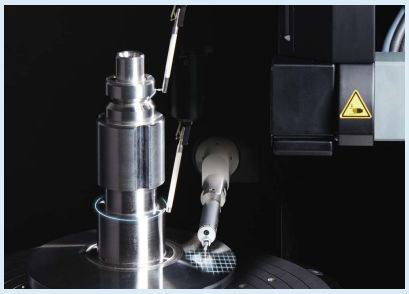

- Measurement repeatability is improved as a result of the newly developed centring mechanism and optimized slider structure.
- A detector holder with motorized sliding function enables continuous inside and upper surface measurement of thick workpieces.



- Measurement throughput is improved as a result of the increased drive speeds of each axis and the addition of new functions and technologies.
- The incredibly high throughput is the result of reduced positioning time by CNC control, a highly rigid centring table, reduced waiting time until measurement start, and best-in class drive speeds.





Refer to the ROUNDTRACER EXTREME Brochure (**E15032**) for more details.

Mitutoyo reserves the right to change any or all aspects of any product specification, including prices, designs and service content, without notice.

ROUNDPAK
Roundness/Cylindricity measurement/Analysis software

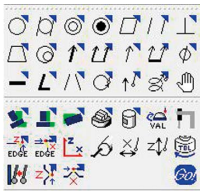

- A wide variety of parameters including those for roundness/cylindricity, as well as flatness and parallelism, are provided as standard features. You can visually select these parameters using icons.

ROUNDPAK also comes with specialized functions, such as the design value best-fit analysis function, the harmonic analysis function, and a function for recording the peak or trough points on a circumference. Data that has already been collected can be easily used for re-calculation, or deleted.

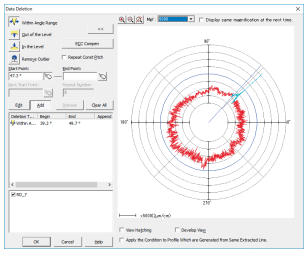

Data deletion

- The customer can create reports in custom formats by specifying how the analysis results will be displayed, as well as the sizes and positions of graphics. The analysis result window can be directly utilized as a layout window. Since the measurement procedure, including the layout information, is saved, the entire process, from measurement start, calculation, result saving, and finally to printing, can be automatically executed.

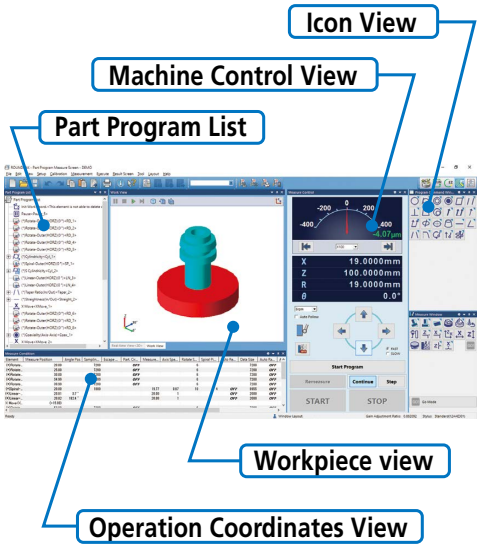

- Analysis results such as cylindricity and coaxiality can be visually expressed in 3D graphics.

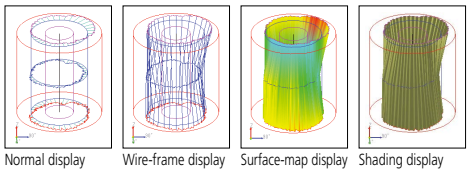

Normal display | Wire-frame display | Surface-map display | Shading display

- An offline teaching function is provided to create a part program (measurement procedure) without an actual measurement target, enabling the user to virtually execute the measurement operation in a 3D simulation window.

Analysis type		Model	RTX-0605-A	RA-2200/H5200 RA-2200 PLUS/ H5200 PLUS/6000CNC	RA-1600	RA-120P	RA-120	RA-10
Roundness		○	✓	✓	✓	✓	✓	✓
Cylindricity		⌭	✓	✓	✓			
Concentricity		◎	✓	✓	✓	✓	✓	✓
Coaxiality	Axis element	◉	✓	✓	✓	✓	✓	✓
	Axis		✓	✓	✓	✓		
Flatness		▱	✓	✓	✓	✓	✓	✓
Parallelism		//	✓	✓	✓	✓	✓	
Perpendicularity		⊥	✓	✓	✓	✓	✓	
Radial deviation		⏢	✓	✓	✓			
Thickness deviation		⌀	✓	✓	✓	✓	✓	
Radial runout		↗	✓	✓	✓	✓	✓	✓
Total runout		↗↗	✓	✓	✓			
Diameter measurement		ϕ	✓	✓	✓			
Straightness		—	✓	✓	✓			
Inclination		∠	✓	✓	✓			
Taper		/\	✓	✓	✓			
Diameter contour tolerancing		⌖	✓	✓	✓			
Rectilinear contour tolerancing		⌒	✓	✓	✓			
Width measurement (only CNC)		⌶	✓	✓ (only PLUS and CNC)				
Power spectrum		ılı	✓	✓	✓			
Harmonic analysis		⌖	✓	✓	✓	✓		
Profile operation		⏚	✓	✓	✓	✓		
Tapered surface analysis		⌓	✓	✓	✓			
Lead (twist) analysis		▨	✓ (optional)					
3D surface property analysis		≋	✓ (optional)					

L

Mitutoyo reserves the right to change any or all aspects of any product specification, including prices, designs and service content, without notice.

Mitutoyo

Geometrical tolerances ISO/DIS 1101: 1996*1, ISO 5459*2

Roundness
Any circumferential line must be contained within the tolerance zone formed between two coplanar circles with a difference in radii of t

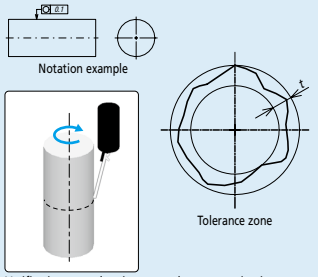

Verification example using a roundness measuring instrument

Straightness
Any line on the surface must lie within the tolerance zone formed between two parallel straight lines a distance t apart and in the direction specified

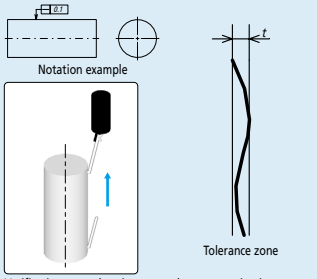

Verification example using a roundness measuring instrument

Flatness
The surface must be contained within the tolerance zone formed between two parallel planes a distance t apart

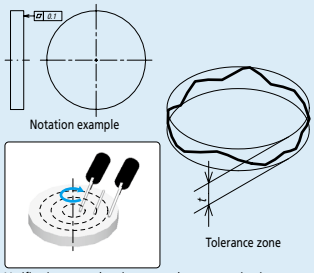

Verification example using a roundness measuring instrument

Cylindricity
The surface must be contained within the tolerance zone formed between two coaxial cylinders with a difference in radii of t

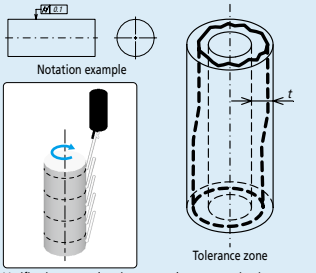

Verification example using a roundness measuring instrument

Concentricity
The center point must be contained within the tolerance zone formed by a circle of diameter t concentric with the datum

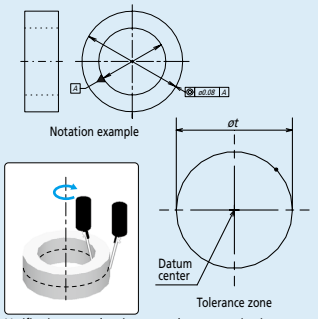

Verification example using a roundness measuring instrument

Coaxiality
The axis must be contained within the tolerance zone formed by a cylinder of diameter t concentric with the datum

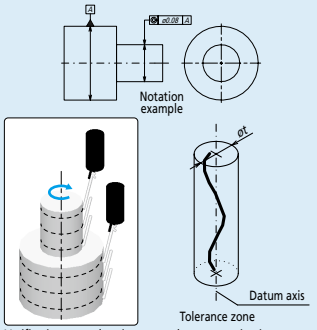

Verification example using a roundness measuring instrument

Perpendicularity
The line or surface must be contained within the tolerance zone formed between two planes a distance t apart and perpendicular to the datum

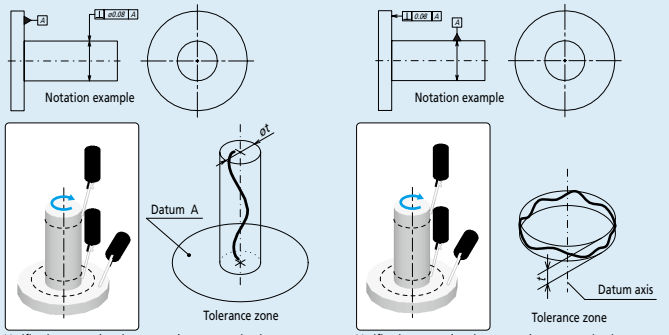

Verification example using a roundness measuring instrument

Circular Runout (Radial and Axial)
The line must be contained within the tolerance zone formed between two coplanar and/or concentric circles a distance t apart concentric with or perpendicular to the datum

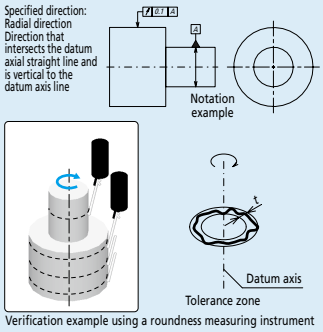

Verification example using a roundness measuring instrument

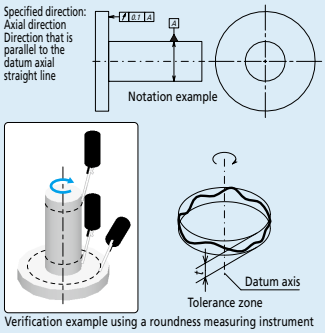

Verification example using a roundness measuring instrument

Total Runout (Radial and Axial)
The surface must be contained within the tolerance zone formed between two coaxial cylinders with a difference in radii of t, or planes a distance t apart, concentric with or perpendicular to the datum

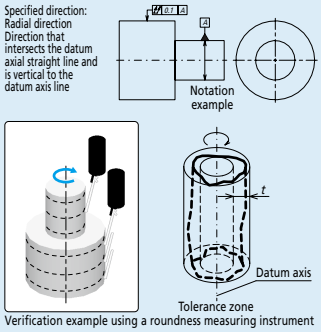

Verification example using a roundness measuring instrument

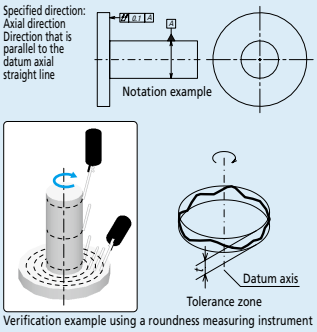

Verification example using a roundness measuring instrument

Adjustment prior to Measurement ISO 4291: 1985*3

Centering
A displacement offset (eccentricity) between the Roundtest's turntable axis and that of the workpiece results in distortion of the measured form (limaçon error) and consequentially produces an error in the calculated roundness value. The larger the eccentricity, the larger is the error in calculated roundness. Therefore the workpiece should be centered (axes made coincident) before measurement.
Some roundness testers support accurate measurement with a limaçon error correction function.
The effectiveness of this function can be seen in the graph below.

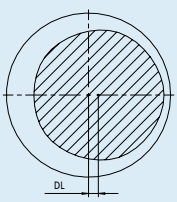

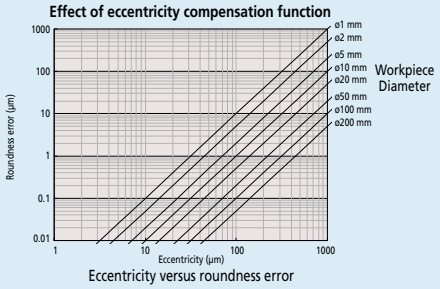

Eccentricity versus roundness error

Leveling
Any inclination of the axis of a workpiece with respect to the rotational axis of the measuring instrument will cause an elliptic error. Leveling must be performed so that these axes are sufficiently parallel.

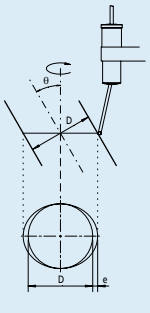

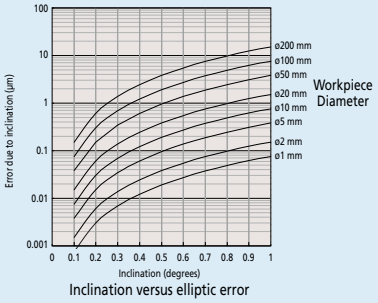

Inclination versus elliptic error

Effect of Filter Settings on the Measured Profile ISO 12181-2: 2011*4

Profiles can be filtered in various ways to reduce or eliminate unwanted detail, with a cut-off value set in terms of undulations per revolution (upr). The effect of different upr settings is shown in the diagrams below, which illustrate how the measured roundness value decreases as lower upr settings progressively smooth out the line.

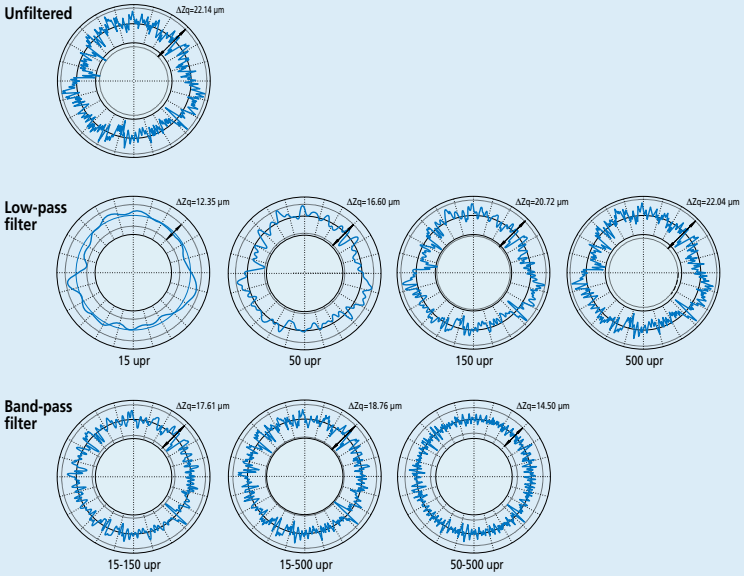

Evaluating the Measured Profile Roundness ISO 12181-1: 2011*5, ISO 4291: 1985*3

Roundness testers use the measurement data to generate reference circles whose dimensions define the roundness value. There are four methods of generating these circles, as shown below, and each method has individual characteristics so the method that best matches the function of the workpiece should be chosen.
Each method results in a different center position for the reference circles and therefore affects the axial location of the circular feature measured.

Least Square Circle (LSC)

A circle is fitted to the measured profile such that the sum of the squares of the departure of the profile data from this circle is a minimum. The roundness figure is then defined as the difference between the maximum deviation of the profile from this circle (highest peak to the lowest valley).

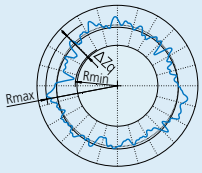

ΔZq = Rmax-Rmin
ΔZq: A symbol indicating roundness value by LSC.

Minimum Zone Circles (MZC)

Two concentric circles are positioned to enclose the measured profile such that their radial difference is a minimum. The roundness figure is then defined as the radial separation of these two circles.

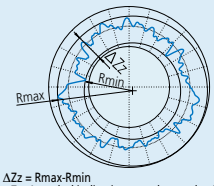

ΔZz = Rmax-Rmin
ΔZz: A symbol indicating roundness value by MZC.

Minimum Circumscribed Circle (MCC)

The smallest circle that can enclose the measured profile is created. The roundness figure is then defined as the maximum deviation of the profile from this circle. This circle is sometimes referred to as the 'ring gage' circle.

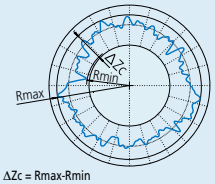

ΔZc = Rmax-Rmin
ΔZc: A symbol indicating roundness value by MCC.

Maximum inscribed Circle (MIC)

The largest circle that can be enclosed by the profile data is created. The roundness figure is then defined as the maximum deviation of the profile from this circle. This circle is sometimes referred to as the `plug gage' circle.

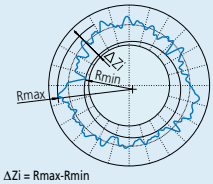

ΔZi = Rmax-Rmin
ΔZi: A symbol indicating roundness value by MIC.

Filtering

	2CR filter	Gaussian filter
Standard	ISO 4291: 1985*3	ISO 12181-1: 2011*5
Attenuation rate	75%	50%

Terms and abbreviated terms ISO 12181-1: 2011*5

Abbreviated terms	Terms
LSCI	Least squares reference circle
LSCY	Least squares reference cylinder
LSLI	Least squares reference line
LSPL	Least squares reference plane
LCD	Local cylindricity deviation
LFD	Local flatness deviation
LRD	Local roundness deviation
LSD	Local straightness deviation
MICI	Maximum inscribed reference circle
MICY	Maximum inscribed reference cylinder
MCCI	Minimum circumscribed reference circle
MCCY	Minimum circumscribed reference cylinder
MZCI	Minimum zone reference circles
MZCY	Minimum zone reference cylinder
MZLI	Minimum zone reference lines
MZPL	Minimum zone reference planes
UPR	Undulations per revolution

Parameters and abbreviated terms ISO 12181-1: 2011*5

Abbreviated terms	Parameter	Reference element*			
		Minimum zone	Least square	Minimum circumscribed	Minimum inscribed
CYLtt	Cylinder taper		✓		
STRsg	Generatrix straightness deviation		✓		
STRlc	Local generatrix straightness deviation		✓		
CYLp	Peak-to-reference cylindricity deviation		✓		
FLTp	Peak-to-reference flatness deviation		✓		
RONp	Peak-to-reference roundness deviation		✓		
STRp	Peak-to-reference straightness deviation		✓		
CYLt	Peak-to-valley cylindricity deviation	✓	✓	✓	✓
FLTt	Peak-to-valley flatness deviation	✓	✓		
RONt	Peak-to-valley roundness deviation	✓	✓	✓	✓
STRt	Peak-to-valley straightness deviation	✓	✓		
CYLv	Reference-to-valley cylindricity deviation		✓		
FLTv	Reference-to-valley flatness deviation		✓		
RONv	Reference-to-valley roundness deviation		✓		
STRv	Reference-to-valley straightness deviation		✓		
CYLq	Root-mean-square cylindricity deviation		✓		
FLTq	Root-mean-squareflatness deviation		✓		
RONq	Root-mean-square roundness deviation		✓		
STRq	Root-mean-square straightness deviation		✓		
STRsa	Straightness deviation of the extracted median line	✓	✓	✓	✓

* The reference elements to which the parameter can be applied.

*1 ISO/DIS 1101: 1996 Geometrical Product Specifications (GPS) - Geometrical tolerancing - Tolerancing of form, orientation, location and run-out
*2 ISO 5459 Technical drawings - Geometrical tolerancing - Datums and datum-systems for geometrical tolerances
*3 ISO 4291: 1985 Methods for the assessment of departure from roundness - Measurement of variations in radius
*4 ISO 12181-2: 2011 Geometrical Product Specifications (GPS) - Roundness - Part2: Specification operators
*5 ISO 12181-1: 2011 Geometrical Product Specifications (GPS) - Roundness - Part 1: Vocabulary and parameters of roundness



Micro Vickers Hardness Testing Machines
HM-100

Refer to page M-3 for details.



CNC Rockwell Hardness Testing Machines
HR-600

Refer to page M-5 for details.



Rockwell Hardness Testing Machines
HR-430MS

Refer to page M-8 for details.

M

Hardness Testing Machines

Smart Measuring System

An online system to monitor the operational and mechanical statuses of measuring machines. This allows you to grasp the state of a process flow from the operational statuses of measuring machines within a production process.

MeasurLink® ENABLED
Data Management Software by Mitutoyo

Measurement Data Network System

MeasurLink® is a measurement data management system based on databases (SQL Server). You can build a network to manage the measurement results and measuring machines by simply combining the functions necessary for your purpose.

MeasurLink® is a registered trademark of Mitutoyo Corporation in Japan and Mitutoyo America Corporation in the United States.

PROPRIETARY INSPECTION CERTIFICATE

Measuring Instruments Shipped with Inspection Certificate

Mitutoyo guarantees product quality as a leading precision measuring instrument manufacturer and ships measuring instruments with an inspection certificate that includes inspection data so that customers can use them with confidence.

MiCAT
Mitutoyo Intelligent Computer Aided Technology
the standard in world metrology software
HARDNESS

Software for Hardness Testing

Enables capture of a specimen screen from a hardness testing machine, automatic measurement of indentations, and control of continuous automatic measurements based on a given pattern.

INDEX

Micro Vickers Hardness Testing Machines

HM-200 M-3
HM-100 M-3

Vickers Hardness Testing Machines

HV-100 M-4

Rockwell Hardness Testing Machines

HR-600 M-5
AVPAK M-6
HR-530 M-7
HR-200/300/400 M-8

Portable Hardness Testing Instruments

Rebound Type Portable Hardness Tester, **HH-411** M-9
Durometers for Sponge, Rubber, and Plastics, **HH-300** M-10
Quick Guide to Precision Measuring Instruments M-11

MeasurLink® ENABLED
Data Management Software by Mitutoyo

PROPRIETARY INSPECTION CERTIFICATE

HM-200
SERIES 810 — Micro Vickers Hardness Testing Machines

- The latest electromagnetic force motor used in the loading mechanism enables the test force to be freely selected.
- In addition to Vickers hardness testing, Knoop (HK)* and Fracture toughness (Kc) tests can also be performed.

* For Knoop hardness testing, Knoop indenter (optional) is required.



System A
(**HM-210A / 220A**)

SPECIFICATIONS

Model	HM-210			HM-220		
Display unit	metric	inch/mm	metric	metric	inch/mm	metric
Operation	Manual	Manual	System	Manual	Manual	System
Applicable standards	JIS B7725, ISO 6507-2					
Test force mN (gf)	98.07 to 9807 (10 to 1000)			0.4903 to 19610 (0.05 to 2000)		
Arbitrary test force	One setting can be saved, default is HV0.025					
External dimensions (W×D×H) (excluding protrusions and stage); Main unit mass	System **A**: Approx. 315×671×595 mm, 38.5 kg System **B**/**C**/**D**: Approx. 315×586×741 mm, 37.4 kg					
Power supply/ Power consumption	AC100 V to 240 V 50/60 Hz System **A**: 31 W System **B**/**C**/**D**: 30 W			AC100 V to 240 V 50/60 Hz System **A**: 44 W System **B**/**C**/**D**: 43 W		

System A (**HM-210A / 220A**)
All-in-one model with simple color touch-panel operation

System B (**HM-210B / 220B**)
A system equipped with automatic reading function with **AVPAK** software

System C (**HM-210C / 220C**)
In addition to the functions of System **B**, System **C** is equipped with an electric stage

System D (**HM-210D / 220D**)
In addition to the functions of System **B** and System **C**, System **D** is equipped with the auto focus function

CAUTION: The **AVPAK-20** software package is not for use within, or export to, the United States of America
The **AVPAK-10** software package is for the United States of America

MeasurLink® ENABLED
Data Management Software by Mitutoyo

PROPRIETARY INSPECTION CERTIFICATE

HM-100
SERIES 810 — Micro Vickers Hardness Testing Machines

- The **HM-100** Series is an affordable line of microhardness testers able to work with very small test loads (from 98.07 mN, 10 gf, and upwards), which is perfect for evaluating the mechanical characteristics and controlling the quality of electric/ electronic components.



HM-103

SPECIFICATIONS

Model	HM-101*	HM-102	HM-103
Applicable standards	JIS B7725, ISO 6507-2		
Test force mN (gf)	98.07 to 9807 (10 to 1000)		
External dimensions (W×D×H)	Main unit: 380×600×590 mm, 42 kg		
	—	Control panel: 165×260×105 mm, 1.5 kg	
	—		TV monitor: 202×29.2×175.8 mm, 1.1 kg
Power supply/ Power consumption	AC 100 V±10% (AC 120 V, AC 220 V, AC 240 V according to the factory shipped setting)		
	60 VA or less		Approx. 90 VA or less

* Only the **HM-102** and **HM-103** models can be connected to the MeasurLink® measurement data network.



Refer to the Hardness Testing Machines Brochure (**E17001**) for more details.

Mitutoyo reserves the right to change any or all aspects of any product specification, including prices, designs and service content, without notice.

HV-100
SERIES 810 — Vickers Hardness Testing Machines

- Vickers hardness testers have a wide application in testing metals, especially small heat-treated parts, and are also suitable for making special-purpose tests such as carburized case hardness, maximum hardness of spot welds, high-temperature hardness, and fracture toughness of ceramic materials.
- In addition to Vickers hardness testing, Knoop (HK)*1/Brinell (HB)*2/Fracture toughness (Kc) tests can also be performed.

*1 For Knoop hardness testing, Knoop indenter (optional) is required.
*2 For Brinell hardness testing a Brinell indenter (optional) and additional weight are required.



System A (HV-110A / 120A)

SPECIFICATIONS

Model	HV-110			HV-120		
Display unit	metric	inch/mm	metric	metric	inch/mm	metric
Operation	Manual	Manual	System	Manual	Manual	System
Applicable standards	JIS B7725, ISO 6507-2					
Test force N(kgf)	9.807 to 490.3 (1 to 50)			2.942 to 294.2 (0.3 to 30)		
External dimensions (W×D×H) (excluding protrusions and stage)	System **A**: Approx. 307×696×781 mm System **B**/**C**/**D**: Approx. 307×627×875 mm					
Main unit mass	**HV-110**: 60 kg **HV-120**: 58 kg					
Power supply/ Power consumption	AC100 V to 240 V 50/60 Hz System **A**: 24 W System **B**/**C**/**D**: 22 W					

System A (**HM-110A / 120A**)
All-in-one model with simple color touch-panel operation

System B (**HM-110B / 120B**)
A system equipped with automatic reading function with **AVPAK** software

System C (**HM-110C / 120C**)
In addition to the functions of System **B**, System **C** is equipped with an electric stage

System D (**HM-110D / 120D**)
In addition to the functions of System **B** and System **C**, System **D** is equipped with the auto focus function

CAUTION: The **AVPAK-20** software package is not for use within, or export to, the United States of America
The **AVPAK-10** software package is for the United States of America

M



Refer to the Hardness Testing Machines Brochure (**E17001**) for more details.

Mitutoyo reserves the right to change any or all aspects of any product specification, including prices, designs and service content, without notice.

HR-600
SERIES 810 — CNC Rockwell Hardness Testing Machines

- A workpiece that cannot be placed on a tester due to its large size can be placed on the stage of this product and tested as is. (Maximum loading mass 100 kg)
- The motorized stage makes automatic multi-point testing at multiple places and of multiple workpieces possible.
- Plastic hardness testing is also available in addition to Rockwell/Brinell tests on metal. Brinell and Vickers indentation hardness tests which do not require vision measurement can also be performed.
- The **HR-610A**/**620A** is operable with a touch panel display (some functions are operable with **AVPAK** software) and the **HR-620B** is operable with a touch panel display and **AVPAK** software.
- Automatic testing by moving in the X-, Y- and Z-axis directions for workpieces with uneven surfaces or steps is made possible by adding X-axis stage and **AVPAK** software to **HR-620B**, which is equipped with a motorized Y-axis stage as standard. Also, using **FORMEio** software makes possible easy communication with PLCs for automation purposes, such as control of handling devices and work cells.





Refer to the **HR-600** Series Brochure (**E17011**) for more details.



HR-610A
(Motorized X-axis stage is available)



HR-620B
(With a motorized Y-axis stage as standard and an optional motorized X-axis stage)

SPECIFICATIONS

Model		HR-610A		HR-620A		HR-620B
Display unit		metric	inch/mm	metric	inch/mm	—
Test methods/ Standard No.	Rockwell	JIS B7726:2017, ISO 6508-2:2015, ASTM E18-20				
	Brinell	JIS B7724:2017, ISO 6506-2:2017, ASTM E10-18				
	Plastic			ISO 2039-1:2001		
		JIS K 7202-2:2001, ISO 2039-2:1987, ASTM D785-08 [A&B]				
	Indentation Brinell hardness	VDI/VDE 2616				
	Indentation Vickers hardness			VDI/VDE 2616		
Initial test force N (kgf)	Rockwell	29.42 (3) 98.07 (10)				
	Plastic			9.807 (1)		
		98.07 (10)				
	Indentation Brinell hardness	98.07 (10) 490.3 (50)				
	Indentation Vickers hardness			9.807 (1)		
Test force N (kgf)	Rockwell	147.1 (15) 294.2 (30) 441.3 (45) 588.4 (60) 980.7 (100) 1471 (150)				
	Brinell	49.03 (5) to 1839 (187.5)		9.807 (1) to 2452 (250)		
	Plastic			49.03 (5) 132.4 (13.5) 358.0 (36.5) 962.1 (98.1)		
		588.4 (60) 980.7 (100) 1471 (150)				
	Indentation Brinell hardness	612.9 (62.5) 1839 (187.5)		612.9 (62.5) 1839 (187.5) 2452 (250)		
	Indentation Vickers hardness			294.2 (30) 490.4 (50)		
Power supply		AC100 to 200 V 50/60 Hz				
Mass		176 kg		181 kg		205 kg

Note 1: Plastic tests may not be supported depending on the plastic material.
Note 2: For Brinell hardness testing, an indenter (optional) and a measurement microscope are required. A measurement microscope should be prepared by customer.
Note 3: No indenter and hardness standard block is supplied with the unit. These items (conform to the applicable standard) must be purchased separately.

CAUTION: The **AVPAK-20** software package is not for use within, or export to, the United States of America
The **AVPAK-10** software package is for the United States of America

Mitutoyo reserves the right to change any or all aspects of any product specification, including prices, designs and service content, without notice.

MeasurLink® ENABLED
Data Management Software by Mitutoyo

MiCAT
Mitutoyo Intelligent Computer Aided Technology
the standard in world metrology software
HARDNESS

Software for Hardness testing AVPAK

- Enables capture of specimen images from a hardness testing machine, automatic measurement of indentations, and control of continuous automatic measurements based on a given pattern.

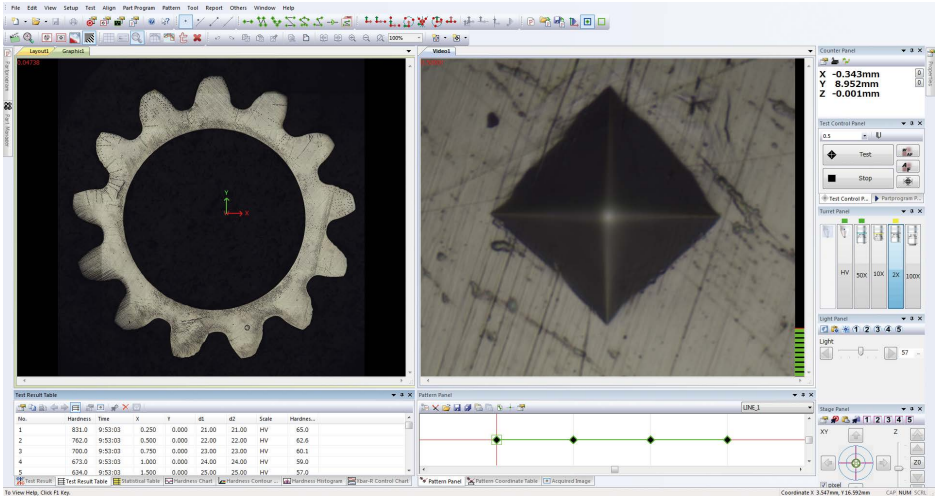

Function related to capture of specimen image and pattern setting of test position

Stitching (Only for **AVPAK-20**)
Takes images of an entire rectangular field from the moving stage then combines the images.
Note: Only for System **C**/**D** of **HM**/**HV**

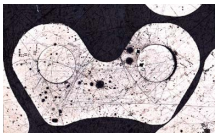

Auto trace (Only for **AVPAK-20**)
Automatically traces the shape of the sample. Takes images as the stage moves along the outer contours of the specimen then combines the images.
Note: Only for System **C**/**D** of **HM**/**HV**

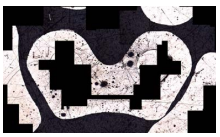

Contour detection (Only for **AVPAK-20**)
Detects the outline of the workpiece from combined images.

Various kinds of pattern setting
Performs time-consuming pattern setting with ease.



Pattern creation
This tool supports the creation of test patterns such as straight lines, zigzag lines, and teaching patterns.



Pattern pasting
This tool supports the pasting of created test patterns. It adjusts the origin, direction, etc., to paste a pattern.

Pattern panel

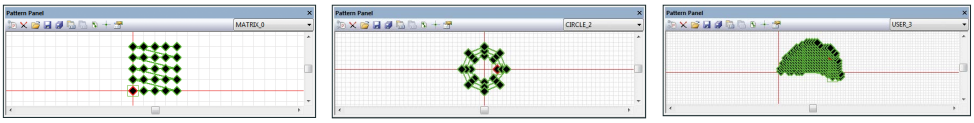

Handling of multiple specimens

Part program and Parts Manager functions support testing of multiple and irregular specimens.

Multi-specimen testing
Executes different part programs for each irregular specimen.

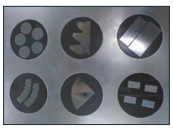

Parts Manager
Executes a common part program for specimens having the same shape.



Reading of indentations

Improvement in image-processing performance has improved the indentation measurement function.

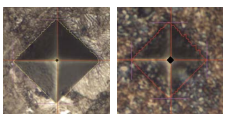

Note 1: Measurement accuracy varies according to conditions.
Note 2: Only for **HM**/**HV**

CAUTION: The **AVPAK-20** software package is not for use within, or export to, the United States of America
The **AVPAK-10** software package is for the United States of America

M

Mitutoyo reserves the right to change any or all aspects of any product specification, including prices, designs and service content, without notice.

Mitutoyo

MeasurLink® ENABLED
Data Management Software by Mitutoyo

PROPRIETARY INSPECTION CERTIFICATE

HR-530
SERIES 810 — Rockwell Hardness Testing Machines

- Unique electronic control makes the **HR-530** Series of hardness testers extremely versatile by enabling Brinell hardness testing* as well as load-sequence hardness testing of plastics, plus Rockwell and Rockwell Superficial hardness testing.

  * For Brinell hardness testing, an indenter (optional) and a measurement microscope are required.



HR-530L

- This series can test the hardness of the inside wall of a ring, a test that is only possible using ordinary hardness testers by cutting the ring into pieces. (All models)
- The touch-panel display unit can be mounted on top of the tester, providing significant convenience if the machine installation space is restricted. (All models) Use the optional display mounting bracket to mount the unit.
- This series allows numeric display of statistical analysis results such as maximum and minimum values, mean value and graphic display of $\bar{X}$-R control charts and histograms required for hardness evaluation.

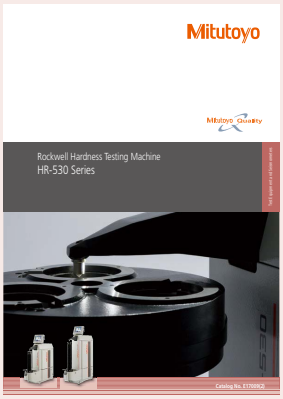

Refer to the **HR-530** Series Brochure (**E17009**) for more details.

SPECIFICATIONS

Model		HR-530		HR-530L	
Display unit		metric	inch/mm	metric	inch/mm
Applicable standards		JIS B7726, ISO 6508-2, ASTM E18-20			
Testable hardness		Rockwell hardness/Rockwell Superficial hardness/Brinell hardness/Indentation Brinell hardness/Plastics hardness			
Initial test force	N(kgf)	29.42 (3) 98.07 (10)			
Test force N(kgf)	Rockwell	588.4 (60) 980.7 (100) 1471 (150)			
	Rockwell Superficial	147.1 (15) 294.2 (30) 441.3 (45)			
	Brinell	61.29 (6.25) 98.07 (10) 153.2 (15.625) 245.2 (25) 294.2 (30) 306.5 (31.25) 612.9 (62.5) 980.7 (100) 1226 (125) 1839 (187.5)			
Power supply		AC100 to 240 V 50/60 kHz			
External dimensions	Main unit	250 (W)×667 (D)×621 (H) mm		300 (W)×667 (D)×766 (H) mm	
	Touch-panel display unit	191 (W)×147 (D)×71 (H) mm			
Mass		Main unit: 61 kg		Main unit: 70 kg	

Note 1: Plastic tests may not be supported depending on the plastic material.
Note 2: For Brinell hardness testing, an indenter (optional) and a measurement microscope are required. A measurement microscope should be prepared by customer.
Note 3: No indenter and hardness standard block is supplied with the unit. These items (conform to the applicable standard) must be purchased separately.

Mitutoyo reserves the right to change any or all aspects of any product specification, including prices, designs and service content, without notice.

MeasurLink® ENABLED
Data Management Software by Mitutoyo

HR-200/300/400
SERIES 810 — Rockwell Hardness Testing Machines

- A series of economical Rockwell hardness testing machines. The lineup consists of 4 models including a digital display type and an analog display type.



HR-210MR



HR-430MS

SPECIFICATIONS

Model		HR-210MR*	HR-430MR	HR-320MS	HR-430MS
Display		Analog	Digital	Digital	Digital
Applicable standards		JIS B7726:2017, ISO 6508-2:2015	JIS B7726:2017, ISO 6508-2:2015, ASTM E18-20		
Testable hardness		Rockwell hardness			
		—		Rockwell Superficial hardness	
Preliminary test force	N (kgf)	98.07 (10)		29.42 (3) 98.07 (10)	
Test force N (kgf)	Rockwell	588.4 (60) 980.7 (100) 1471 (150)			
	Superficial	—		147.1 (15) 294.2 (30) 441.3 (45)	
Power supply		AC100 to 240 V 50/60 Hz 1.8 A DC12 V-4.17 A			
External dimensions (excluding protrusions and stage)		214 (W)×512 (D)×780 (H) mm			
Mass		46 kg	50 kg	47 kg	50 kg

* Only the **HR-430MR**, **HR-320MS** and **HR-430MS** models can be connected to the MeasurLink® measurement data network.
Note 1: Plastic tests may not be supported depending on the plastic material.
Note 2: Brinell hardness tests can be performed by using the weight set for Brinell test, Brinell indenter and measuring microscope. A measurement microscope should be prepared by customer.
Note 3: No indenter and hardness standard block is supplied with the unit. These items (conform to the applicable standard) must be purchased separately.



Refer to the Hardness Testing Machines Brochure (**E17001**) for more details.

M

Mitutoyo reserves the right to change any or all aspects of any product specification, including prices, designs and service content, without notice.

Mitutoyo

MeasurLink® ENABLED
Data Management Software by Mitutoyo

PROPRIETARY INSPECTION CERTIFICATE

HARDMATIC HH-411
SERIES 810 — Rebound Type Portable Hardness Tester

- Excellent operability that performs hardness tests with the touch of a key and a compact body allows users to measure hardness in the field. This instrument is best suited for on-site hardness tests such as large molds, railroad track, and welded spots in structures.



SPECIFICATIONS

Order No.	810-299-10	810-299-11	810-298-10	810-298-11
Model	HH-411			
Hardness display range	Leeb hardness: 1 to 999 HL			
Display range* (This display range varies depending on the conversion table used.)	Vickers hardness: 43 to 950 HV Brinell hardness: 20 to 896 HB Rockwell hardness (C scale): 19.3 to 68.2 HRC Rockwell hardness (B scale): 13.5 to 101.7 HRB		Shore hardness: 30.1 to 99.5 HS (ASTM) 13.2 to 98.6 HS (JIS) Tensile strength: 499 to 1996 MPa	
Shore hardness (HS) conversion	VHS (JIS B7731)		HSD	
Detector	Impact hammer with integrated detector and carbide-ball tip (D type)			
Display unit	7-segment LCD			
Specimen requirements	Test points: At least 5 mm from specimen edges and at intervals of at least 3 mm Min. thickness: 5 mm; mass: 5 kg or more (However, specimens with a mass between 0.1 and 5 kg can be tested if fixed to a strong support.)			
Power supply	Alkaline AA battery 2 pcs. (battery life: 70 hours) or optional AC adapter	Optional AC adapter	Alkaline AA battery 2 pcs. (battery life: 70 hours) or optional AC adapter	Optional AC adapter
External dimensions/Mass	Detector: ø28×175 mm in length, 120 g Display (W×D×H): 70×35×110 mm, 200 g			

* For **HH-411**, display values are guaranteed based on Leeb hardness. Converted values are for reference only.



Refer to the Hardness Testing Machines Brochure (**E17001**) for more details.

Mitutoyo reserves the right to change any or all aspects of any product specification, including prices, designs and service content, without notice.

HARDMATIC HH-300
SERIES 811 — Durometers for Sponge, Rubber, and Plastics

Compact type



811-329-10 HH-329
811-335-10 HH-335
811-337-10 HH-337



811-330-10 HH-330
811-336-10 HH-336
811-338-10 HH-338

Long type



811-331-10
HH-331

811-333-10
HH-333



811-332-10
HH-332

811-334-10
HH-334

- Hardness measurement by durometer is simply performed by holding the instrument against the surface of a specimen and reading the indicated value. This type of hardness tester is most widely used for hardness testing of sponge, rubber, plastics and other soft materials.

SPECIFICATIONS

Order No.		811-329-10	811-330-10	811-331-10	811-332-10	811-333-10	811-334-10
Model No.		HH-329	HH-330	HH-331	HH-332	HH-333	HH-334
Type		Compact		Long			
Display specification		Analog	Digital	Analog	Digital	Analog	Digital
Measurement target		Soft rubber, sponge, felt, hard film, winder		General rubber, soft plastic		Hard rubber, hard plastic, ebonite	
Category in standards		Type E		Type A		Type D	
Needle shape	Shaft diameter	ø5 mm		ø1.25 mm			
	Tip shape	Semi-sphere		Circular truncated cone		Cone	
	Tip angle	—		35°		30°	
	Tip diameter	—		ø0.79 mm		—	
	Tip curvature	—		—		0.1 mm	
Power supply		—	Button silver oxide battery SR44	—	Button silver oxide battery SR44	—	Button silver oxide battery SR44
External dimensions (W×D×H)		68×34×146 mm	59×40×147 mm	Analog long: 68×35×188 mm Digital long : 59×41×190 mm			
Mass		300 g	290 g	320 g	310 g	320 g	310 g

Order No.		811-335-10	811-335-11	811-336-10	811-336-11	811-337-10	811-337-11	811-338-10	811-338-11
Model No.		HH-335	HH-335-01	HH-336	HH-336-01	HH-337	HH-337-01	HH-338	HH-338-01
Type		Compact							
Display specification		Analog		Digital		Analog		Digital	
Measurement target		General rubber, soft plastic				Hard rubber, hard plastic, ebonite			
Category in standards		Type A				Type D			
Needle shape	Shaft diameter	ø1.25 mm							
	Tip shape	Circular truncated cone				Cone			
	Tip angle	35°				30°			
	Tip diameter	ø0.79 mm				—			
	Tip curvature	—				0.1 mm			
Power supply		—		Button silver oxide battery SR44		—		Button silver oxide battery SR44	
External dimensions (W×D×H)		Analog compact: 68×34×146 mm Digital compact : 59×40×147 mm							
Mass		300 g		290 g		300 g		290 g	

Optional Accessories for Dual-purpose Stand CTS Series

Order No.	811-019	811-012	811-013
Model	CTS-101	CTS-102	CTS-103
Applicable models	HH-331/332	HH-333/334/337/338/337-01/338-01	HH-335/336/335-01/336-01

M

Methods of Hardness Measurement

(1) Vickers

Vickers hardness is a test method that has the widest application range, allowing hardness inspection with an arbitrary test force. This test has an extremely large number of application fields particularly for hardness tests conducted with a test force less than 9.807 N (1 kgf). As shown in the following formula, Vickers hardness is a value determined by dividing test force F (N) by contact area S (mm^2) between a specimen and an indenter, which is calculated from diagonal length d (mm, mean of two directional lengths) of an indentation formed by the indenter (a square pyramidal diamond , opposing face angle θ=136°) in the specimen using a test force.

$$HV=k\frac{F}{S}=0.102\frac{F}{S}=0.102\frac{2F\sin\frac{\theta}{2}}{d^2}=0.1891\frac{F}{d^2}$$ F: N, d: mm

The error in the calculated Vickers hardness is given by the following formula. Here, Δd_1, Δd_2, and 'a' represent the measurement error that is due to the microscope, an error in reading an indentation, and the length of an edge line generated by opposing faces of an indenter tip, respectively. The unit of $\Delta\theta$ is degrees.

$$\frac{\Delta HV}{HV}\fallingdotseq-\frac{\Delta F}{F}-2\frac{\Delta d_1}{d}-2\frac{\Delta d_2}{d}-\frac{a^2}{d^2}-3.5\times10^{-3}\Delta\theta$$

(2) Knoop

As shown in the following formula, Knoop hardness is a value obtained by dividing test force by the projected area A (mm^2) of an indentation, which is calculated from the longer diagonal length d (mm) of the indentation formed by pressing a rhomboidal diamond indenter (opposing edge angles of 172°30' and 130°) into a specimen with test force F applied. Knoop hardness can also be measured by replacing the Vickers indenter of a microhardness testing machine with a Knoop indenter.

$$HK=k\frac{F}{A}=0.102\frac{F}{A}=0.102\frac{F}{cd^2}=1.451\frac{F}{d^2}$$ F: N, d: mm

(3) Rockwell and Rockwell Superficial

To measure Rockwell or Rockwell Superficial hardness, first apply a preload force and then the test force to a specimen and return to the preload force using a diamond indenter (tip cone angle: 120°, tip radius: 0.2 mm) or a sphere indenter (steel ball or carbide ball). This hardness value is obtained from the hardness formula expressed by the difference in indentation depth h (μm) between the preload and test forces. Rockwell uses a preload force of 98.07 N, and Rockwell Superficial 29.42 N. A specific symbol provided in combination with a type of indenter, test force, and hardness formula is known as a scale. Japanese Industrial Standards (JIS) define various scales of related hardness.

Relationship between Vickers Hardness and the Minimum Allowable Thickness of a Specimen

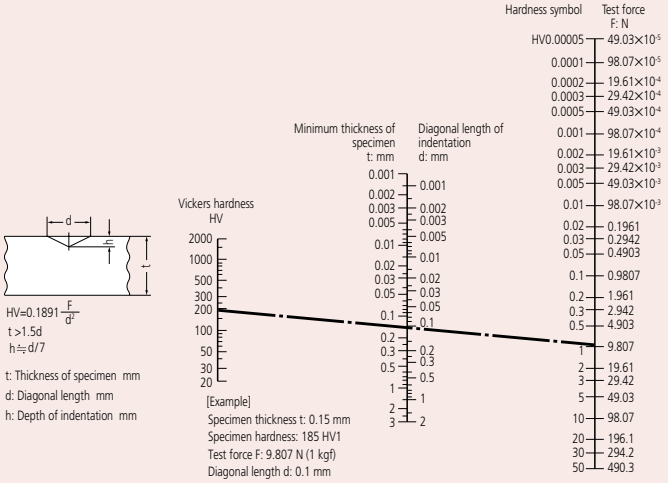

Relationship between Rockwell / Rockwell Superficial Hardness and the Minimum Thickness of a Specimen

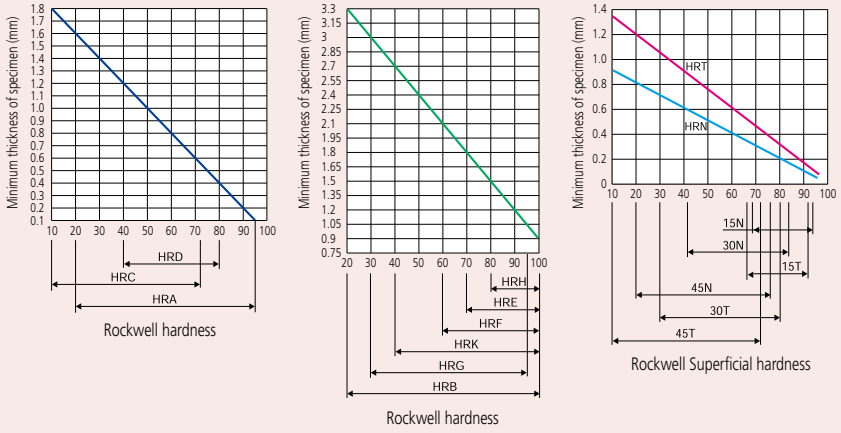

Rockwell Hardness Scales

Scale	Indenter	Test force	Application
A	Diamond	588.4 N	Carbide, sheet steel
D		980.7 N	Case-hardened steel
C		1471 N	Steel (100 HRB or more to 70 HRC or less)
F	Sphere of 1.5875 mm diameter	588.4 N	Bearing metal, annealed copper
B		980.7 N	Brass
G		1471 N	Hard aluminum alloy, beryllium copper, phosphor bronze
H	Sphere of 3.175 mm diameter	588.4 N	Bearing metal, grinding wheel
E		980.7 N	Bearing metal
K		1471 N	Bearing metal
L	Sphere of 6.35 mm diameter	588.4 N	Plastic, lead
M		980.7 N	
P		1471 N	
R	Sphere of 12.7 mm diameter	588.4 N	Plastic
S		980.7 N	
V		1471 N	

Rockwell Superficial Hardness Scales

Scale	Indenter	Test force	Application
15-N	Diamond	147.1 N	Thin surface-hardened layer on steel such as carburized or nitrided
30-N		294.2 N	
45-N		441.3 N	
15-T	Sphere of 1.5875 mm diameter	147.1 N	Sheet of mild steel, brass, bronze, etc.
30-T		294.2 N	
45-T		441.3 N	
15-W	Sphere of 3.175 mm diameter	147.1 N	Plastic, zinc, bearing alloy
30-W		294.2 N	
45-W		441.3 N	
15-X	Sphere of 6.35 mm diameter	147.1 N	Plastic, zinc, bearing alloy
30-X		294.2 N	
45-X		441.3 N	
15-Y	Sphere of 12.7 mm diameter	147.1 N	Plastic, zinc, bearing alloy
30-Y		294.2 N	
45-Y		441.3 N	



Shop-floor Type CNC Coordinate Measuring Machine MiSTAR 555

Refer to page N-3 for details.



CNC Coordinate Measuring Machine CRYSTA-Apex V Series

Refer to page N-4 for details.



Non-contact Line-Laser Probe SurfaceMeasure

Refer to page N-16 for details.

N

Coordinate Measuring Machines



Smart Measuring System

An online system to monitor the operational and mechanical statuses of measuring machines. This allows you to grasp the state of a process flow from the operational statuses of measuring machines within a production process.



Measurement Data Network System

MeasurLink® is a measurement data management system based on databases (SQL Server). You can build a network to manage the measurement results and measuring machines by simply combining the functions necessary for your purpose.

MeasurLink® is a registered trademark of Mitutoyo Corporation in Japan and Mitutoyo America Corporation in the United States.

INDEX

Coordinate Measuring Machines

MiSTAR 555	N-3
CRYSTA-Apex V500/700/900 Series	N-4
CRYSTA-Apex V1200/1600/2000 Series	N-5
CRYSTA-Apex EX 1200R Series	N-6
STRATO-Apex Series	N-7
STRATO-Apex Series	N-8
LEGEX Series	N-9
CARBstrato	N-10
MACH-3A 653	N-11
MACH-V9106	N-12
MACH Ko-ga-me	N-13
MCOSMOS	N-14
MiCAT Planner	N-15
SurfaceMeasure	N-16
MSURF	N-17
Scanning probes	N-18
Clamping System	N-19
Quick Guide to Precision Measuring Instruments	N-21

Note: All Mitutoyo CNC CMMs manufactured since 2008 incorporate a main unit Startup system (relocation detection system), which disables operation when an unexpected vibration has occurred or the machine has been relocated. Be sure to contact your nearest Mitutoyo Sales Office prior to relocating your machine after initial installation.

Mitutoyo

SMS Smart Measuring System
MeasurLink® ENABLED
Data Management Software by Mitutoyo

Shop-floor Type CNC Coordinate Measuring Machine MiSTAR 555

- Accuracy across a wide temperature range of 10 to 40 °C has been achieved thanks to a combination of technologies such as the symmetric guide structure, uniform material, and temperature compensation.
- Equipped with the newly developed environment-resistant ABS scale, the machine benefits from significantly enhanced contamination tolerance. This eliminates the need for initialization and improves work efficiency.
- The footprint is reduced to about 80% compared with that of the conventional moving bridge model by adopting the horizontal-arm structure and installing the CMM controller and PC under the measuring table.



Equipped with the **PH10MQ** probe head



MiSTAR 555

SPECIFICATIONS

Items \ Model		MiSTAR 555
Measuring range	X axis	570 mm
	Y axis	500 mm
	Z axis	500 mm
Maximum permissible length measurement error*1*2 ISO 10360-2: 2009 (18 to 22 °C) (Probe used SP25M)		2.2 + 3L/1000 µm
Drive speed		CNC MODE: 5 to 350 mm/s (max. combined speed 606 mm/s)
Drive acceleration		1556 mm/s^2 (max. combined acceleration 2695 mm/s^2)
Workpiece	Max. height	660 mm
	Max. loading	120 kg
Accuracy guaranteed temperature range		10 to 40 °C
Mass (including the controller and installation platform)		655 kg

*1 Specifications vary by configuration and thermal environment.
*2 L = Measuring length (unit: mm)
Note: While the appearance of the natural stone measuring table varies according to the source, the high stability for which this material is known can always be relied upon.



Refer to the **MiSTAR 555** Brochure (**E16028**) for more details.

Mitutoyo reserves the right to change any or all aspects of any product specification, including prices, designs and service content, without notice.

SMS Smart Measuring System
MeasurLink® ENABLED
Data Management Software by Mitutoyo

Standard CNC CMM
CRYSTA-Apex V500/700/900 Series

- The **CRYSTA-Apex V500/700/900** Series, CNC CMMs deliver high accuracy (1.7 µm), high speed, and high acceleration. This series includes models suitable for small- to medium-sized workpieces.
- The temperature compensation system supplied as standard can deliver accuracy across a wide temperature range of 16 to 26 °C.



CRYSTA-Apex V574



CRYSTA-Apex V776



CRYSTA-Apex V9106



The PH20 5-axis control touch-trigger probe is available. Excludes CRYSTA-Apex V9108, CRYSTA-Apex V9168 and CRYSTA-Apex V9208.

SPECIFICATIONS

Items \ Model		CRYSTA-Apex V544	CRYSTA-Apex V574	CRYSTA-Apex V776	CRYSTA-Apex V7106
Measuring range	X axis	500 mm		700 mm	
	Y axis	400 mm	700 mm	700 mm	1000 mm
	Z axis	400 mm		600 mm	

Items \ Model		CRYSTA-Apex V 9106	CRYSTA-Apex V 9108	CRYSTA-Apex V 9166	CRYSTA-Apex V 9168	CRYSTA-Apex V 9206	CRYSTA-Apex V 9208
Measuring range	X axis	900 mm					
	Y axis	1000 mm		1600 mm		2000 mm	
	Z axis	600 mm	800 mm	600 mm	800 mm	600 mm	800 mm

Note: While the appearance of the natural stone measuring table varies according to the source, the high stability for which this material is known can always be relied upon.

CRYSTA-Apex V Series Accuracy

Unit: µm

Series	Probe used	Length measurement error*1 ISO 10360-2: 2009
500/700/900 Series	**SP25M**	$E_{0, MPE}$=1.7 + 3L/1000*2

*1 Specifications vary by configuration, size, and thermal environment.
*2 L = Measuring length (unit: mm)

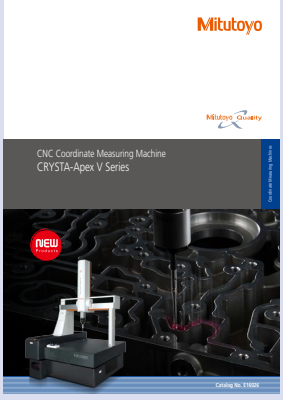

Refer to the **CRYSTA-Apex V** Series Brochure (**E16026**) for more details.

N

Mitutoyo reserves the right to change any or all aspects of any product specification, including prices, designs and service content, without notice.

Mitutoyo

SMS Smart Measuring System
MeasurLink® ENABLED
Data Management Software by Mitutoyo

Standard CNC CMM
CRYSTA-Apex V1200/1600/2000 Series

- The **CRYSTA-Apex V1200/1600/2000** Series are large-sized CNC CMMs developed for supporting quality evaluation of large parts.
- The temperature compensation system supplied as standard can deliver accuracy across a wide temperature range of 16 to 26 °C.



CRYSTA-Apex V122010



CRYSTA-Apex V162012

SPECIFICATIONS

Items \ Model		CRYSTA-Apex V121210	CRYSTA-Apex V122010	CRYSTA-Apex V123010
Measuring range	X axis		1200 mm	
	Y axis	1200 mm	2000 mm	3000 mm
	Z axis		1000 mm	

Items \ Model		CRYSTA-Apex V 162012	CRYSTA-Apex V 162016	CRYSTA-Apex V 163012	CRYSTA-Apex V 163016	CRYSTA-Apex V 164012	CRYSTA-Apex V 164016
Measuring range	X axis	1600 mm					
	Y axis	2000 mm		3000 mm		4000 mm	
	Z axis	1200 mm	1600 mm	1200 mm	1600 mm	1200 mm	1600 mm

Items \ Model		CRYSTA-Apex V203016	CRYSTA-Apex V204016
Measuring range	X axis	2000 mm	
	Y axis	3000 mm	4000 mm
	Z axis	1600 mm	

Note: While the appearance of the natural stone measuring table varies according to the source, the high stability for which this material is known can always be relied upon.

CRYSTA-Apex V Series Accuracy

Unit: µm

Series	Probe used	Length measurement error *1 ISO 10360-2: 2009
1200 Series	**SP25M**	$E_{0, MPE}$=2.3 + 3L/1000*2
1600 Series		$E_{0, MPE}$=3.3 + 4.5L/1000 (4.5 + 5.5L/1000)*2 *3
2000 Series		$E_{0, MPE}$=4.5 + 8L/1000*2

*1 Specifications vary by configuration, size, and thermal environment.
*2 L = Measuring length (unit: mm)
*3 ( ) indicates Z: 1600 mm specification

N

Mitutoyo reserves the right to change any or all aspects of any product specification, including prices, designs and service content, without notice.

MeasurLink® ENABLED
Data Management Software by Mitutoyo



Helical scan



Gasket scan



Sweep scan



Airfoil section scan



Standard CNC CMM
CRYSTA-Apex EX 1200R Series

- **CRYSTA-Apex EX 1200R** Series products are advanced CNC CMMs equipped with the REVO-2 probe head and a choice of probes to create a range of standard 5-axis measuring machines.
- 5-axis operation reduces the time required for probe repositioning movements and allows more flexible positioning. This also facilitates access to complex workpieces and saves time both during programming and measurement.
- Allows ultra high-speed 5-axis scanning (max. 500 mm/s), far surpassing conventional 3-axis control. Support for high-speed sampling of up to 4,000 points per second allows acquisition of densely spaced measurement points, even during fast scanning.
- Internal implementation of laser sensing technology ensures high-accuracy measurement, even with long styli (up to 500 mm*).

* Distance from probe rotation center to stylus tip



CRYSTA-Apex EX 123010R

SPECIFICATIONS

Items \ Model		CRYSTA-Apex EX 121210R	CRYSTA-Apex EX 122010R	CRYSTA-Apex EX 123010R
Measuring range	X axis	1200 mm		
	Y axis	1200 mm	2000 mm	3000 mm
	Z axis	960 mm		

Note: While the appearance of the natural stone measuring table varies according to the source, the high stability for which this material is known can always be relied upon.

CRYSTA-Apex EX 1200R Series Accuracy

Unit: µm

Probe used	Length measurement error*1 ISO 10360-2: 2009
REVO + RSP2 + RSH250	$E_{0,MPE}$=2.9 + 4L/1000*2
REVO + RSP3-3 + RSH3-3	$E_{0,MPE}$=2.5 + 3L/1000*2

*1 Specifications vary by configuration, size, and thermal environment.
*2 L = Measuring length (unit: mm)

N

Mitutoyo reserves the right to change any or all aspects of any product specification, including prices, designs and service content, without notice.

Mitutoyo

SMS Smart Measuring System
MeasurLink® ENABLED
Data Management Software by Mitutoyo

7

High Accuracy CNC CMM
STRATO-Apex Series

- The **STRATO-Apex** Series of CNC CMMs offer improved structural rigidity and guide systems to guarantee very high accuracy measurement. High drive speed and high acceleration provide lower cycle times in critical measurement applications.
- For position detection, the same ultra-high-precision length measuring unit (internally developed) as that used in the **LEGEX** series has been adopted. It enables excellent position detection for highly-accurate measurement. It also applies various other technologies, such as a high-speed control program, that enable high speed and accuracy.



STRATO-Apex 574



STRATO-Apex 7106



STRATO-Apex 9166



STRATO-Apex 162016

SPECIFICATIONS

Items \ Model		STRATO-Apex 574	STRATO-Apex 776	STRATO-Apex 7106
Measuring range	X axis	500 mm	700 mm	
	Y axis	700 mm	700 mm	1000 mm
	Z axis	400 mm	600 mm	

Items \ Model		STRATO-Apex 9106	STRATO-Apex 9166	STRATO-Apex 162012	STRATO-Apex 162016	STRATO-Apex 163012	STRATO-Apex 163016
Measuring range	X axis	900 mm		1600 mm			
	Y axis	1000 mm	1600 mm	2000 mm		3000 mm	
	Z axis	600 mm		1200 mm	1600 mm	1200 mm	1600 mm

Note: While the appearance of the natural stone measuring table varies according to the source, the high stability for which this material is known can always be relied upon.

STRATO-Apex Series Accuracy

Unit: µm

Series	Probe used	Length measurement error*1 ISO 10360-2: 2009
574 Series	**SP25M**	$E_{0,MPE} = 0.7 + 2.5L/1000$*2
700/**900** Series		$E_{0,MPE} = 0.7 + 2.5L/1000$*2
1600 Series		$E_{0,MPE} = 2.5 + 4.0L/1000\ (3.0 + 4.0L/1000)$*2 *3

*1 Specifications vary by configuration, size, and thermal environment.
*2 L = Measuring length (unit: mm)
*3 ( ) indicates Z: 1600 mm specification



Refer to the **STRATO-Apex** Series Brochure (**E16001**) for more details.

N

Mitutoyo reserves the right to change any or all aspects of any product specification, including prices, designs and service content, without notice.

SMS Smart Measuring System
MeasurLink® ENABLED
Data Management Software by Mitutoyo

High-accuracy Separate Guide Type STRATO-Apex Series

- The **STRATO-Apex** Series are CNC CMMs that use Mitutoyo's standard structure for large machines which are designed to be used for measuring large and heavy workpieces with high accuracy. The measuring accuracy and drive speed are the world's highest in the X-axis measuring range of 2000 mm and 3000 mm.
- High-accuracy linear encoders (manufactured in-house) are built into the length measuring units used for position detection. Their excellent position detection capability is what makes the control of these high-accuracy devices possible. The series also applies a multitude of technologies regarding structure, control, component processing, assembly, and other aspects that enable large CMMs to deliver high-accuracy measurements.
- These series are equipped with a system to automatically restore accuracy deterioration (MOVAC) caused by foundation deformation as a standard feature.
- Equipped with a temperature compensation system that guarantees the specified accuracy within the wide range of 18 to 22 °C under certain environmental conditions, although high-accuracy CMMs should ideally be installed in a temperature controlled room.
- Safety devices such as a Z-axis beam sensor, tape switch, and area sensor are available as options.



STRATO-Apex 3000G Series

N

SPECIFICATIONS

Items \ Model		STRATO-Apex 2000G Series	STRATO-Apex 3000G Series	STRATO-Apex 4000G Series
Measuring range	X axis	2000 mm	3000 mm	4000 mm
	Y axis	3000 mm/4000 mm/5000 mm/6000 mm		
	Z axis	1200 mm/1600 mm/2000 mm		

Note: For information on accuracy specifications, contact your local Mitutoyo sales office.

Mitutoyo reserves the right to change any or all aspects of any product specification, including prices, designs and service content, without notice.

Mitutoyo

SMS Smart Measuring System
MeasurLink® ENABLED
Data Management Software by Mitutoyo

Ultra-high Accuracy CNC CMM
LEGEX Series

- The **LEGEX** Series is an ultra-high precision CNC CMM with the world's highest level of accuracy, made possible by rigorous analysis of all possible error-producing factors and the elimination or minimization of their effects.
- The fixed bridge structure and precision air bearings running on highly rigid guideways ensure superior motion stability and ultra-high geometrical accuracy.
  It has been designed to minimize deformation affected by variable load, etc. by conducting in-depth stress analyses based on FEM structural analysis simulations. In addition, other technologies have been utilized in the structure of the drive unit, minimizing vibration, etc., to provide ultra-high accuracy.
- For position detection, it has adopted an ultra-high-precision length measuring unit (internally developed) created by combining an ultra-high-precision crystallized glass scale having a thermal expansion coefficient of 0 with a high-resolution, high-performance reflective linear encoder, thereby enabling excellent position detection for ultra-high-precision measurement.



LEGEX 9106

SPECIFICATIONS

Items \ Model		LEGEX 574	LEGEX 774	LEGEX 776	LEGEX 9106	LEGEX 12128*
Measuring range	X axis	500 mm	700 mm	700 mm	900 mm	1200 mm
	Y axis	700 mm	700 mm	700 mm	1000 mm	1200 mm
	Z axis	450 mm	450 mm	600 mm	600 mm	800 mm

* Custom-made model. For information about **LEGEX 12128**, contact your local Mitutoyo sales office.
Note: For measuring table, the standard specification is ceramic coating. A hand scraper version is available as a made-to-order item.

LEGEX Series Accuracy

Unit: µm

Probe used	Length measurement error*1 ISO 10360-2: 2009
MPP-310Q	$E_{0,MPE}$=0.28 + L/1000*2

*1 Specifications vary by configuration, size, and thermal environment.
*2 L = Measuring length (unit: mm)
Note: For **LEGEX 12128**, contact your local Mitutoyo sales office.

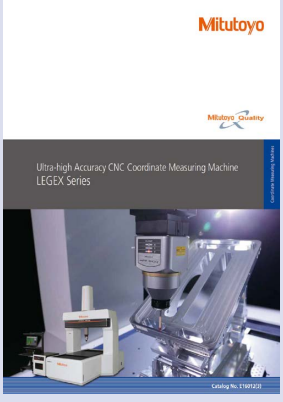

Refer to the **LEGEX** Series Brochure (**E16012**) for more details.

Mitutoyo reserves the right to change any or all aspects of any product specification, including prices, designs and service content, without notice.

SMS Smart Measuring System
MeasurLink® ENABLED
Data Management Software by Mitutoyo

Car Body Measuring System CARBstrato Series



Measurement example for dual-ram type
(Simultaneous use of touch-trigger probe and line laser probe)

- The world's largest class of CMM
  The **CARBstrato** Series is a lineup of horizontal-ram type CNC CMMs, offering the world's largest measurement range that even makes it possible to measure car bodies.

- Single- & Dual-ram systems
  Single- and dual-ram types are available to suit the intended use.
  Single-ram type: Measures a workpiece using a single ram
  Dual-ram type: Measures a workpiece placed between two simultaneously controlled rams

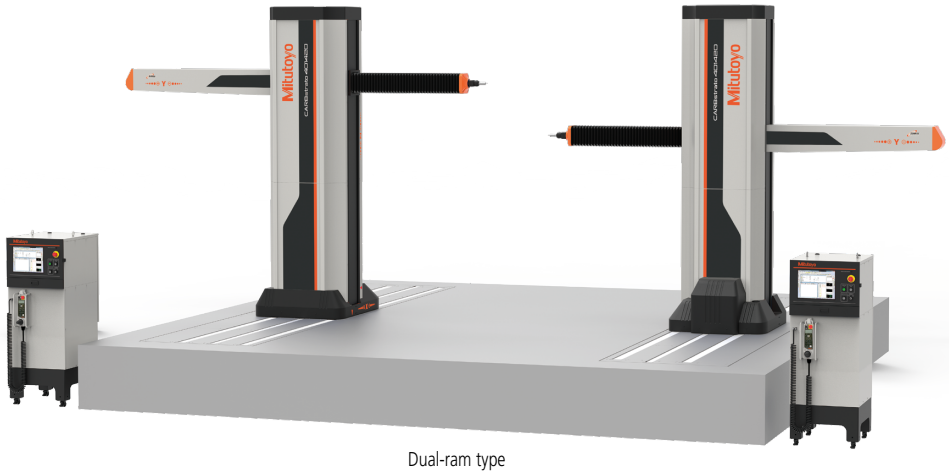

Dual-ram type

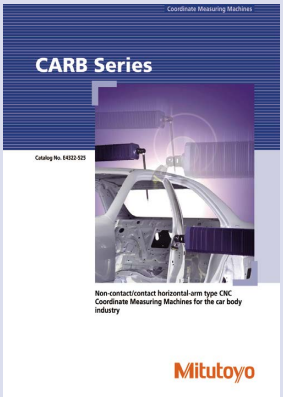

Refer to the **CARB** Series Brochure (**E16014**) for more details.

N

SMS Smart Measuring System
MeasurLink® ENABLED
Data Management Software by Mitutoyo

7

In-line Type CNC CMM MACH-3A Series

• In-line type CNC CMM (Horizontal-ram type) Incorporating the CMM controller and the host computer in the main unit results in a compact space-saving footprint for the shop floor. This series is designed for 24-hour operation with high stability and remarkable durability. Accuracy can be guaranteed within a temperature range of 5 to 40 °C.



MACH-3A 653
The indexing table shown is optional

SPECIFICATIONS

Items \ Model		MACH-3A 653
Measuring range	X axis	600 mm
	Y axis	500 mm
	Z axis	280 mm
Accuracy*1*2	19 to 21 °C	$E_{0,MPE} = 2.2 + 3.5L/1000$ µm*3

*1 Specifications vary by configuration and thermal environment.
*2 For guaranteed accuracy within a temperature range other than 19 to 21 °C, please contact your local Mitutoyo sales office.
*3 L = Measuring length (unit: mm)

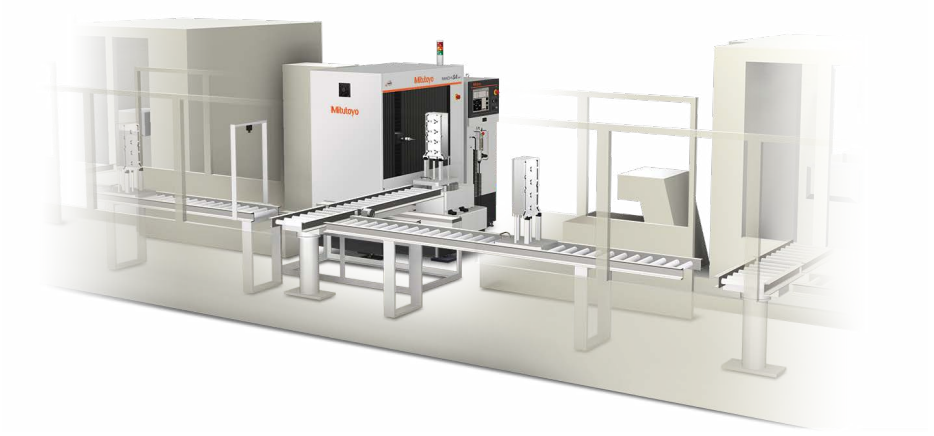

N



Refer to the **MACH** Series Brochure (**E16010**) for more details.

Mitutoyo reserves the right to change any or all aspects of any product specification, including prices, designs and service content, without notice.

SMS Smart Measuring System
MeasurLink® ENABLED
Data Management Software by Mitutoyo

In-line Type CNC CMM
MACH-V9106

- This makes it possible to build a flexible measuring system to replace gage measurements on power train production lines. It also allows for high throughput thanks to high acceleration and high drive speed. In addition, its accuracy is guaranteed within the temperature range 5 to 35 °C.



MACH-V9106

SPECIFICATIONS

Items \ Model		MACH-V9106
Measuring range	X axis	900 mm
	Y axis	1000 mm
	Z axis	600 mm
Accuracy*1*2	19 to 21 °C	$E_{0,MPE} = 2.5 + 3.5L/1000\,\mu m$*3

*1 Specifications vary by configuration and thermal environment.
*2 For guaranteed accuracy within a temperature range other than 19 to 21 °C, please contact your local Mitutoyo sales office.
*3 L = Measuring length (unit: mm)





Refer to the **MACH** Series Brochure (**E16010**) for more details.

N

Mitutoyo reserves the right to change any or all aspects of any product specification, including prices, designs and service content, without notice.

Mitutoyo

SMS Smart Measuring System
MeasurLink® ENABLED
Data Management Software by Mitutoyo

7

CMM equipped with high-accuracy/ high-speed/flexible CNC measuring head MACH Ko-ga-me

- Can be used in standalone applications or integrated into work cells.
- If required, the system can measure workpiece features that exceed the **Ko-ga-me**'s X stroke by mounting the workpiece, or the **Ko-ga-me**, on an auxiliary X axis.
- Ideal for inspection of large or small workpieces and offers a wide choice of measuring probes including touch-trigger and scanning types. (Note: Probe choice may be restricted, depending on the application.)



KGM12128-C

Standalone system



Note: Stand, measuring table, etc. are options.

SPECIFICATIONS

Items \ Model		KGM12128-C
Measuring range	X axis	120 mm
	Y axis	120 mm
	Z axis	80 mm
Accuracy*1*2	19 to 21 °C	$E_{0,MPE}$ = 2.4 + 5.7L/1000 µm*3

*1 Specifications vary by configuration and thermal environment.
*2 For guaranteed accuracy within a temperature range other than 19 to 21 °C, please contact your local Mitutoyo sales office.
*3 L = Measuring length (unit: mm)

N



Refer to the **MACH** Series Brochure (**E16010**) for more details.

Mitutoyo reserves the right to change any or all aspects of any product specification, including prices, designs and service content, without notice.

Software for Manual/CNC Coordinate Measuring Machines MCOSMOS

MCOSMOS software modules

	GEOPAK	CAT1000P	CAT1000S	SCANPAK
MCOSMOS-1	✓			
MCOSMOS-2	✓	✓	✓	
MCOSMOS-3	✓	✓	✓	✓

- **MCOSMOS** is the data processing program family for the CMM that runs on Windows.

GEOPAK [General purpose measurement program]

For (online/offline) part program creation, using the measurement of geometric elements. Extensive tolerance comparisons and output functions are included.

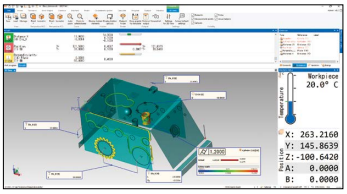

SCANPAK [Contour measurement program]

SCANPAK is a program for measuring/evaluating contours for profile requirements. Graphical display for reporting & output back to m/c tool and many other operations are possible.

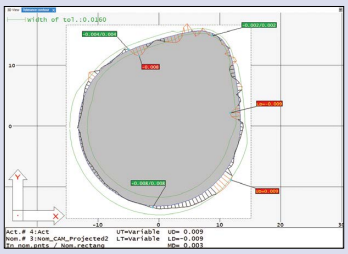

CAT1000P [Online/Offline teaching program]

For (online/offline) part program creation, using the measurement of geometric elements directly from the CAD model, with automatic collision avoidance.

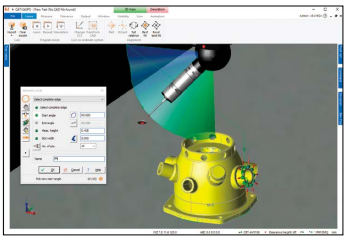

CAT1000S [Curved surface evaluation program]

CAD model-based generation of surface measurement points, and comparison of actual/nominal data, with graphical output.

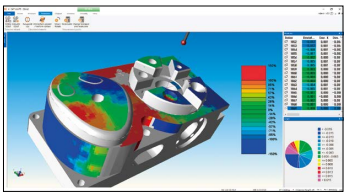

GEARPAK-Worm [Gear evaluation program]

This is a software for evaluation of tooth form based on worm measurement data obtained from CNC CMMs.

GEARPAK Express [Gear evaluation program]

This is a program for evaluation of involute gear teeth obtained from CNC CMMs, and tooth profile based on cylindrical gear measurement data.

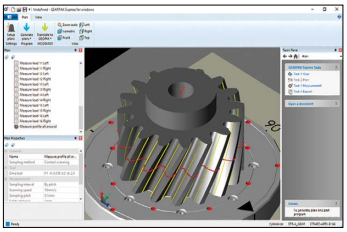

[Result drawing]

GEARPAK-Bevel/Hypoid [Gear production support/evaluation program]

This is a software for evaluation of tooth form, pitch error, etc., based on measurement data from bevel or hypoid gears obtained by CNC CMM.

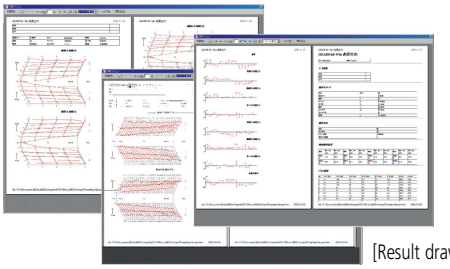

[Result drawing]

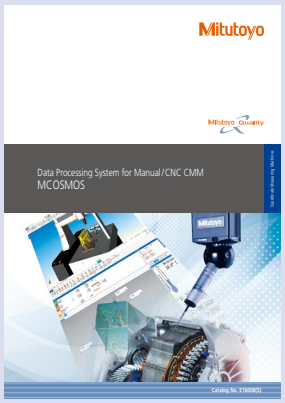

Refer to the **MCOSMOS** Software Brochure (**E16008**) for more details.

FORMTRACEPAK-AP [Analysis program]

This software is used for minutely analyzing two-dimensional curved lines captured by **SCANPAK**.

SURFPAK-SP [Analysis program]

This is a software program as used for the **SURFTEST** roughness probe for a CMM. With this program, surface roughness analysis conforming to standards such as ISO, JIS, ANSI, and VDA are available. Cooperation with **MCOSMOS** enables fully automatic dimensional measurement and surface roughness measurement.

ROUNDPAK-CMM

The functionality of analysis software as used for roundness measuring machines is now available on **MCOSMOS**. As well as roundness and cylindricity evaluation, various filters are also available.

MAFIS Express [Blade measurement/Evaluation program]

This software program enables creation of measurement programs and measurement and analysis of blades and blisks. A part program for measurement can be automatically created just by selecting required contents and evaluation conditions. The measurement results will be displayed in a report including 2D graphics.

N

Mitutoyo reserves the right to change any or all aspects of any product specification, including prices, designs and service content, without notice.

Automatic measurement program generation software MiCAT Planner

One-click programming that changes the relationship between people and precision measurement

- Identifies tolerance information included in 3D models with Product and Manufacturing Information (PMI), defines measurement locations and creates a measurement program fully automatically.
  Also, even with the 3D CAD model without PMI, the measurement program can be created automatically just by adding tolerance information on **MiCAT Planner**.
  This is more efficient than the conventional teaching model.
- Through its optimization function, the software estimates the shortest route for measurement with the minimum of probe repositioning and tool changing, and creates a program that enables measurement in the minimum possible time.
- Utilizing the rule editor function to set the measurement rules prevents variation in measurement quality between program writers.

CAD data with tolerances

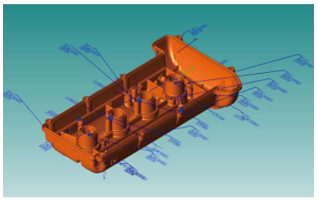

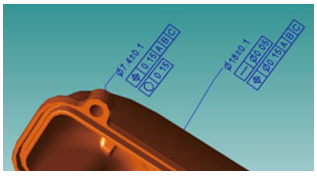

CMM System configuration

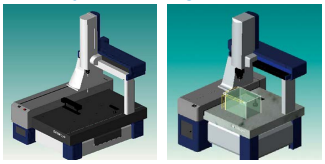

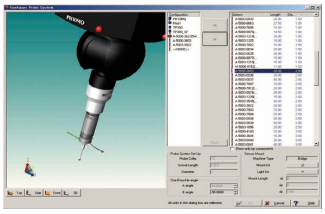

User-defined measurement rules
(number of locations to measure with tolerance information and sampling method, etc.,)

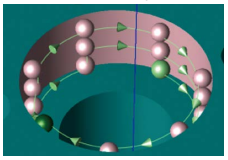

Example of sampling method: contact measurement

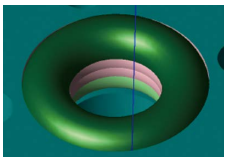

Example of sampling method: scanning measurement

Instantly and automatically creates a measurement program

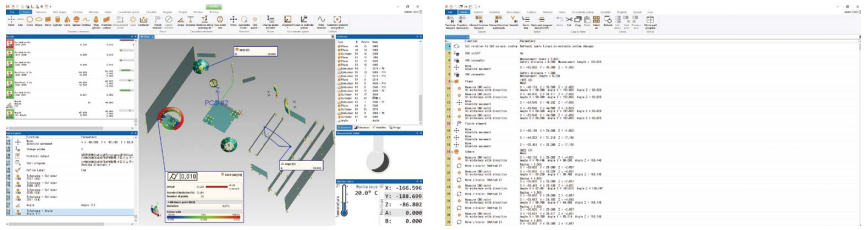

Output a measurement program for MCOSMOS

Tolerance information add function

Lets you add tolerances in the software even for 3D CAD models containing no tolerance information. Automatically create optimal measuring programs based on the added tolerance specifications.

Supported languages

Available in 16 languages

Case study

Compare the measurement part-programming time for a test piece.

1: Programming in 2D drawing: **approx. 45 to 60 minutes**

2: Programming using 2D drawing + 3D CAD: **approx. 15 to 20 minutes**

3: Create with **MiCAT Planner** (using 3D CAD model + PMI): **approx. 3 minutes!**

Note: The measurement rules are defined in advance.

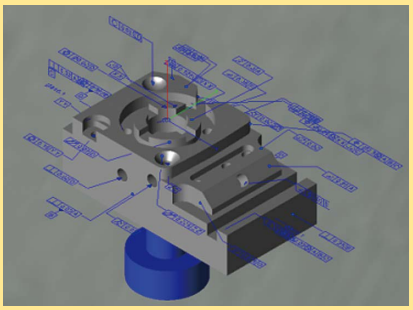

Part-programming time
Reduced by up to 95% !!

Guarantee a
dramatically reduced development phase
and at the same time improve product quality.



Refer to the **MiCAT Planner** Brochure (**E16019**) for more details.

Mitutoyo reserves the right to change any or all aspects of any product specification, including prices, designs and service content, without notice.

• The flying spot type is capable of scanning difficult parts, such as this impeller, precisely and achieves highest scanning accuracy in the class (in the case of **SurfaceMeasure201FS**).





Refer to the **SurfaceMeasure** Brochure (**E16000**) for more details.

Non-contact type laser probe SurfaceMeasure

• Ultra-high speed data collection
The **SurfaceMeasure** probe works by emitting laser beams onto the workpiece to collect coordinate values from its surface, and can collect data at the ultra-high speed of 300,000 points/second.*
* When using **SurfaceMeasure1110**

• Advantages of non-contact type
Non-contact measurement enables measurement of materials that can be easily deformed by contact measurement, including plastics or thin, elastic parts.



• Powder-less measurement
Automatic configuration of the camera sensitivity and the laser intensity settings according to the environment and materials enable establishing a simple and comfortable laser-scanning environment since measurement is now powder and spray free.

• Evaluation cases
The collected point cloud data can be used by various optional software in a wide range of applications, such as editing, plane creation, comparison using CAD data and more.


Measurement of color sample plate

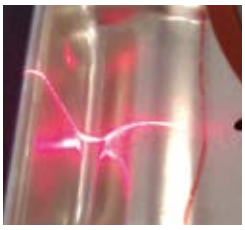
Measurement of glossy parts



403



1110



201FS

SPECIFICATIONS

		SurfaceMeasure 403	SurfaceMeasure 1110	SurfaceMeasure 201FS
Laser irradiation method		Line Laser		Flying spot
Max. scan width		40 mm	110 mm	23 mm
Max. scan depth		30 mm	100 mm	15 mm
Working distance		66 mm	156.5 mm	57.5 mm
Scanning error*		8 µm	9 µm	1.8 µm
Max. acquisition rate		60,000 points/sec	300,000 points/sec	25,000 points/sec
Mass		430 g	440 g	500 g
Laser Class	EN/IEC	Class2 [EN/IEC 60825-1 (2014)]		
	Laser Type	Red-light semiconductor		Semiconductor
Line Laser	Wave length	660 nm		670 nm
	Power output	4 mW	2.5 mW	1 mW

* According to Mitutoyo's acceptance procedure. (1σ/sphere measurement, probe alone.)

Measuring range

Unit: mm

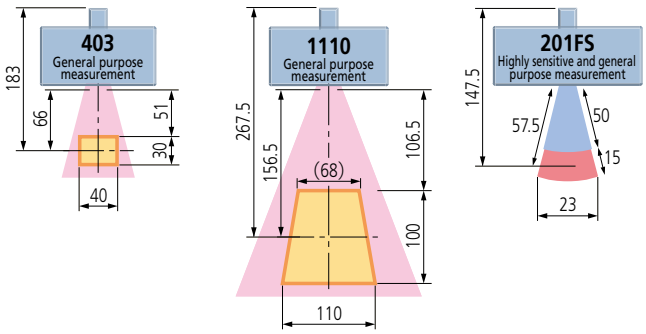

N

Mitutoyo reserves the right to change any or all aspects of any product specification, including prices, designs and service content, without notice.

Point Cloud Processing Software for Coordinate Measuring Machines MSURF

• **MSURF** is a software program that enables users to perform operations from measurement to evaluation on the same platform when the non-contact line laser probe, **SurfaceMeasure**, is used. Eight software modules are provided according to the task.

MSURF-S

Calculates point cloud data measured by CNC CMM with **SurfaceMeasure**. It generates scanning paths by defining the scanning start position, length, and width.

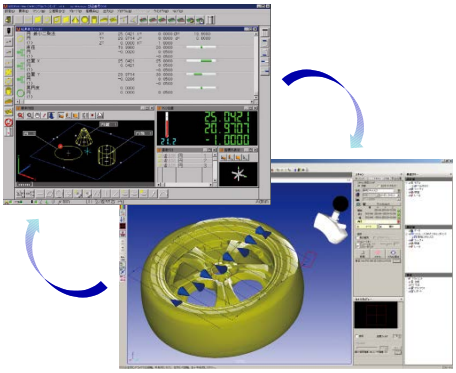

MSURF-I

Conducts analysis or comparison verification of measured point cloud data in reference to nominal data (supporting CAD data import).

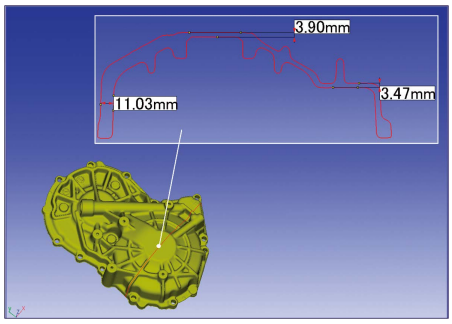

Section evaluation (dimensional calculation)

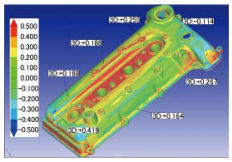

Error color-coded map

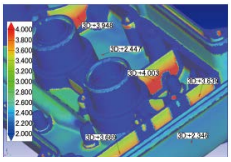

Thickness color-coded map

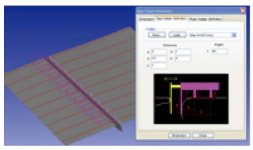

Evaluation of step/clearance

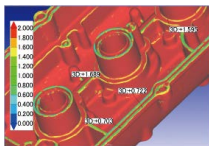

Surface curvature evaluation

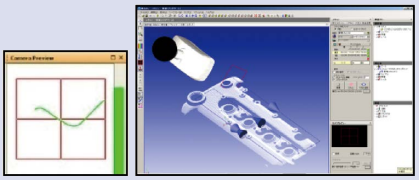



Note: If not using the **ACR3** probe changer, probe replacement is performed manually.

MSURF-MESH PRO

This software is provided with various functions such as filtering point cloud data and mesh data. The software is enhanced by adding functions to standard ones. It also enables functions such as mesh data thinning-out, highlighting, interpolation and outlier removal that are unavailable as standard.

Note: **MSURF-MESH PRO** has the optional functions of **MSURF-I**.

MSURF-PLANNER

MSURF-PLANNER is software to automatically create measurement macros (surface form, feature form) for the line laser probe from 3D CAD data.
Optimized data (travel path, number of probe head revolutions, etc.) of a measurement path will contribute to improvements in productivity.

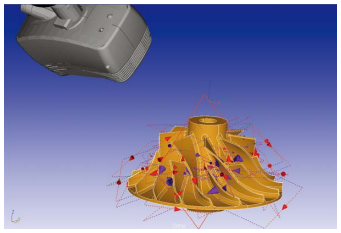

Automatic generation of measurement macros by **MSURF-PLANNER**

MSURF-G

MSURF-G is the off-line version of **MSURF-S**. It allows users to create measurement programs in advance of actual measurements on a CMM by using CAD data. Therefore, users can start measurement immediately at the time a real workpiece is ready. Since **MSURF-S** is a standalone PC application, only requiring installation by the user, it helps preserve valuable CMM time exclusively for productive measurement.

Note: **MSURF-G** cannot be combined with **MSURF-S**.

Mitutoyo reserves the right to change any or all aspects of any product specification, including prices, designs and service content, without notice.

Scanning probes

SP25M

Compact high accuracy type scanning probe



This compact, multifunctional and highly accurate scanning probe is only 25 mm in diameter, which enables it to access shrouded workpiece features. Data collection is by scanning measurement, ultra-high precision point measurement and center alignment point measurement. The probe can be attached to a probe head (**PH10M**/**10MQ**) to automatically change the orientation allowing for maximum flexibility in measurement.

MPP-310Q

Ultra-high accuracy and low measuring force scanning probe



This ultra-high precision scanning probe incorporates built-in XYZ scales for highest-accuracy performance. The compact size of this probe is ideal for low measuring force and high speed scanning. Data collection can be performed by scanning measurement, ultra-high precision point measurement and center alignment measurement.

SP80

High accuracy scanning probe (supports long styli)



A highly accurate stylus up to 500 mm in length (both horizontally and vertically) can be installed on this probe. This ultra-high precision scanning probe allows data collection by scanning measurement, ultra-high precision point measurement and center alignment point measurement.

MPP-10

Probe for effective thread-depth measurement



This is the only probe in the world that is dedicated to measure effective screw-thread depth on a CNC CMM. The probe can also attach to a probe head (**PH10M**/**10MQ**) to change the orientation to measure bores in various directions.

REVO-2

High speed 5-axis scanning head



This high-speed scanning head delivers high accuracy measurement while delivering high-throughput. Contact measurement with a stylus that can be up to 500 mm in length increases flexibility and makes simultaneous 5-axis measuring with non-step indexing possible.

Non-contact probes

SurfaceMeasure

Non-contact type laser probe

This compact, high accuracy, non-contact type laser probe is designed for use with CNC CMMs. The scanning probe automatically adjusts to workpiece surface characteristics to deliver highly efficient measurements. Automatic laser intensity and camera sensitivity adjust according to the environment and the workpiece material, for simpler and more comfortable laser scanning.



SurfaceMeasure403



SurfaceMeasure1110



SurfaceMeasure201FS

QVP

QUICK VISION probe



This CNC CMM Quick Vision Probe utilizes Mitutoyo's technology in a vision measuring machine for totally-automated video measurement.

CF20

Centering microscope for CMMs



This centering microscope enables measurement of small holes or elastic bodies that are very difficult to measure using a contact measurement method such as with a touch-trigger probe. It also allows a CMM to be used as a very large microscope.



CCTV Monitor System for CMM (optional)

A probe for roughness measurement

SURFTEST

Probe for surface roughness measurement

Mounting this probe on a CMM enables surface roughness measurement and analysis to be included in fully automatic CNC measurement cycles. This probe is compatible with an automatic probe changer, and therefore can be automatically replaced with another type of probe for 3D coordinate measurement. A wide variety of roughness analyses can be performed using the dedicated evaluation program.





Touch-trigger probes

TP7M



High accuracy touch-trigger probe

This high-accuracy touch-trigger probe has an excellent repeatability figure of of $2\sigma \leq 0.25$ µm. A long stylus, up to 150 mm in length, can be installed.

TP200



Compact high-accuracy touch-trigger probe

This compact, high accuracy, touch-trigger probe is only 13.5 mm in diameter, making it an ideal choice where high-accuracy measurement inside narrow or shrouded workpiece features is needed.
Styli auto-changing (optional) is supported.

TP20



Compact touch-trigger probe

This compact touch-trigger probe is only 13.2 mm in diameter, making it an ideal choice for probing deep inside narrow or shrouded workpiece features.
Styli auto-changing (optional) is supported when mounted on a CNC CMM.

N

Mitutoyo reserves the right to change any or all aspects of any product specification, including prices, designs and service content, without notice.

MH20i

Touch-trigger probe with manual probe head

This touch-trigger probe equipped with a manual probe head is designed for use with manual CMMs. The probe head may be manually indexed to 168 positions.



PH20

5-axis control touch-trigger system

Thanks to unique "head touches", it is possible to measure by movement of the probe head itself instead of moving the CMM elements. Also, measuring time can significantly be shortened by means of 5-axis concurrent movement and stepless positioning angle.



Probe heads

PH10M / 10MQ

Motorized probe heads

These heads allow automatic control of positioning (up to 720 directions) of the mounted probe. It is possible to mount not only a touch-trigger probe but also any scanning probe, vision probe, laser probe, screw-thread depth probe, etc.
Auto-changing is available (optional).



▲Mounting example of touch-trigger probe

PH1

Manual probe head

This manual probe head is designed for use with the **TP200**/**TP20** touch-trigger probes.
The attached probe is manually positioned in the desired orientation to suit the measuring task.



▲Mounting example of touch-trigger probe



PH6M

Fixed probe head

A fixed probe head with autojoint connector for use with **TP7M** or **SP25M**.



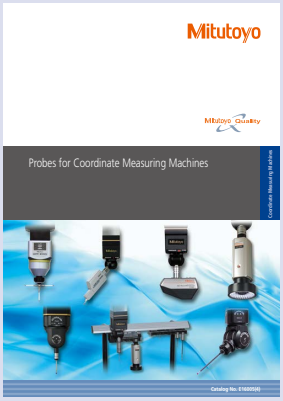

Refer to the Probes for Coordinate Measuring Machines Brochure (**E16005**) for more details.

Clamping System

- A workpiece can be mounted on a CMM's measuring table using a variety of combinations of **Eco-Fix** clamping components. A dedicated fixturing jig is not necessary.
- Economical starter kits "**Eco-fix Kit S**" and "**Eco-fix Kit L**" are available as shown below.
- Using the optional receiver plate set relieves you of the trouble of positioning the workpiece.

Eco-fix Kit



Eco-fix Kit L

Receiver plate set (optional)



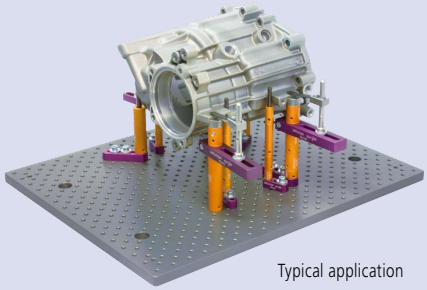

Typical application

Mitutoyo reserves the right to change any or all aspects of any product specification, including prices, designs and service content, without notice.

Performance Assessment Method of Coordinate Measuring Machines

Regarding the performance assessment method of CMM, a revision of ISO 10360 Series was issued in 2003, and was partially revised in 2009.
The following describes the standard inspection method including the revised content.

Table 1 ISO 10360 Series

	Item	ISO Standard No.	Year of issue
1	Terms	ISO 10360-1	2000
2	Length measurement	ISO 10360-2	2009
3	Rotary table equipped CMM	ISO 10360-3	2000
4	Scanning measurement	ISO 10360-4	2000
5	Single/Multi-styli measurement	ISO 10360-5	2010
6	Software inspection	ISO 10360-6	2001

Maximum Permissible Length Measurement Error $E_{0,MPE}$ [ISO 10360-2: 2009]

Using the standard CMM with specified probe, measure 5 different calibrated lengths 3 times each in 7 directions within the measuring volume (as indicated in Figure 1), making a total of 105 measurements.
If these measurement results, including the allowance for the uncertainty of measurement, are equal to or less than the values specified by the manufacturer, then it proves that the performance of the CMM meets its specification. The result of OK/NG is required to be judged considering the uncertainties.
The maximum permissible error (standard value) of the test may be expressed in any of the following three forms (unit: µm).

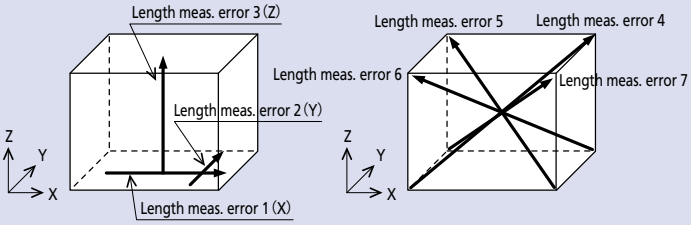

Figure 1 Measauring directions to obtain length measurement error

$E_{0,MPE}$ $(MPE_E) = A + L/K \leq B$
$E_{0,MPE}$ $(MPE_E) = A + L/K$
$E_{0,MPE}$ $(MPE_E) = B$

A: Constant (µm) specified by the manufacturer
K: Dimensionless constant specified by the manufacturer
L: Measured length (mm)
B: Upper limit value (µm) specified by the manufacturer

Note: ISO 10360-2: 2009 requires measurement in 4 different directions and recommends measurement parallel to each axis, while ISO 10360-2: 2001 specified the measurement "in 7 arbitrary directions."

The following error definitions were added in ISO 10360-2: 2009.

Maximum Permissible Length Measurement Error / Length Measurement Error when stylus offset is 150 mm $E_{150,MPE}$ [ISO 10360-2: 2009]

In addition to length measurement in 7 directions, ISO 10360-2: 2009 specifies measuring in 2 lines over the diagonal YZ or XZ plane with probe offset as shown in Figure 2.

Note: The stylus offset is set at 150 mm as default.

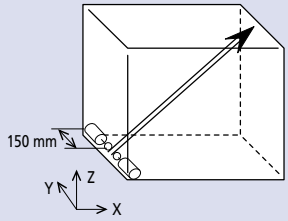

Figure 2 Length measurement error when Z-axis stylus offset is 150 mm

Maximum Permissible Limit of the Repeatability Range of Length Measurement $R_{0,MPL}$ [ISO 10360-2: 2009]

Calculate the maximum value from the results of three repeated measurements.

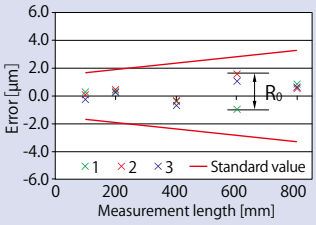

Figure 3 Repeating range of length measurement

Maximum Permissible Radial Four-Axis Error MPE_{FR}, Maximum Permissible Tangential Four-Axis Error MPE_{FT}, and Maximum Permissible Axial Four-Axis Error MPE_{FA} [ISO 10360-3: 2000]

The test procedure under this standard is to place two standard spheres on the rotary table as shown in Figure 4. Rotate the rotary table to a total of 15 positions including 0°, 7 positions in the plus (+) direction, and 7 positions in the minus (-) direction and measure the center coordinates of the two spheres in each position. Then, add the uncertainty of the standard sphere shape to each variation (range) of radial direction elements, connecting direction elements, and rotational axis direction elements of the two standard sphere center coordinates. If these calculated values are less than the specified values, the evaluation test is passed.

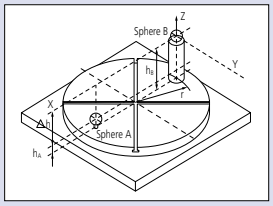

Figure 4 Evaluation of a CMM with a rotary table

Maximum Permissible Scanning Probing Error MPE_{THP} [ISO 10360-4: 2000]

This is the accuracy standard for a CMM if equipped with a scanning probe. The test procedure under this standard is to perform a scanning measurement in 4 planes on the standard sphere and then, for the least squares sphere center calculated using all the measurement points, calculate the radial range (dimension 'A' in Figure 5) within which all measurement points exist. Based on the least squares sphere center calculated above, calculate the radial distance between the calibrated standard sphere radius and the maximum measurement point and the minimum measurement point, and take the larger distance (dimension 'B' in Figure 5). Add an extended uncertainty that combines the uncertainty of the stylus tip shape and the uncertainty of the standard test sphere shape to each A and B dimension. If both calculated values are less than the specified values, this scanning probe test is passed.

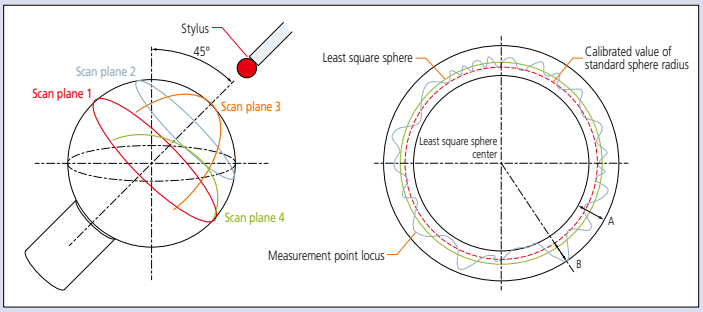

Figure 5 Target measurement planes for the maximum permissible scanning probing error and its evaluation concept

N

Maximum Permissible Single Stylus Form Error $P_{FTU, MPE}$ [ISO 10360-5: 2010]

This measurement was included in the dimensional measurement in ISO 10360-2: 2001. However, it is specified as "CMMs using single and multiple stylus contacting probing systems" in ISO 10360-5: 2010.
The measurement procedure has not been changed, and the following procedure should be performed.
Measure the defined target points on a standard sphere (25 points, as in Figure 6) and use all the results to calculate the center position of the sphere by the least squares method.
Then, calculate the radial distance from the center position of the sphere by the least squares method for each of the 25 measurement points, and obtain the radial difference Rmax - Rmin. If this difference, to which a compound uncertainty of forms of the stylus tip and the standard test sphere are added, is equal to or less than the specified value, it can be judged that the probe has passed the test.

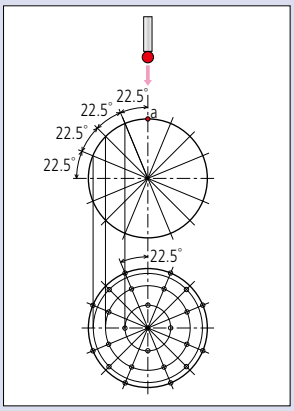

Figure 6 Target points of measurement for Single Stylus Form Error

Measurement Uncertainty of the CMM

Measurement uncertainty is an indication used for evaluating reliability of measurement results.
In ISO 14253-1: 1998, it is proposed to consider the uncertainty when evaluating the measurement result in reference to the specification.
However, it is not easy to estimate the uncertainty of the measurement performed by a CMM.
To estimate the uncertainty of the measurement, it is necessary to quantify each source of uncertainty, and determine how it propagates to the measurement result. The CMM is subject to all types of settings that determine how the measurement should be performed, such as measurement point distribution, or datum definition, according to the drawing instruction or operator's intention. This fact makes it harder to detect the sources of uncertainty influencing the result. Taking circle measurement as an example, just a difference of one measurement point and its distribution causes the necessity of recalculation of the uncertainty.
Also, there are many sources of uncertainty to be considered with the CMM and their interactions are complex.
Because of the above, it is almost impossible to generalize on how to estimate measurement uncertainty of the CMM.

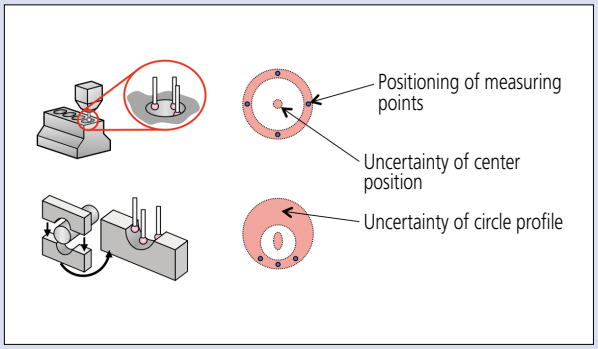

Example of circle measurement by CMM

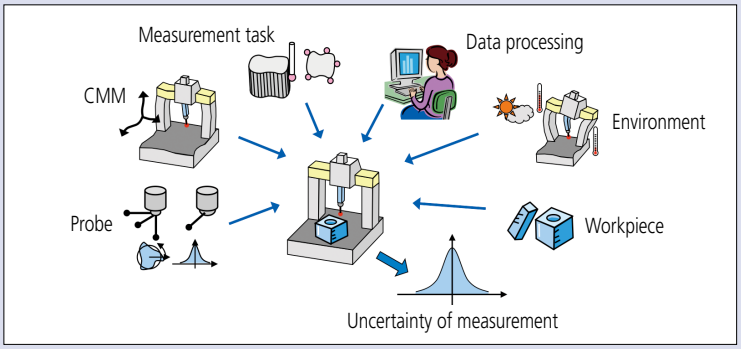

Major contributions that cause uncertainty in CMM measurement results

Measurement uncertainty of the CMM and the Virtual CMM software

The Virtual CMM software* enables straightforward, automated estimation of the measurement uncertainty of a CMM. The software simulates a CMM on a PC based on its machine characteristics and performs virtual (simulated) measurements. The simulated measurements are performed according to the part program created by the machine operator. The machine's performance is evaluated from experimental values based on geometrical characteristics of the actual machine, probing characteristics, and temperature environment, etc., and the measurement uncertainty of the CMM is estimated by the software package.
ISO15530 Part 4 (ISO/TS 15530-4 (2008)) defines how to verify the validity of task-specific measurement uncertainty using computer simulations.
Virtual CMM conforms to this specification.

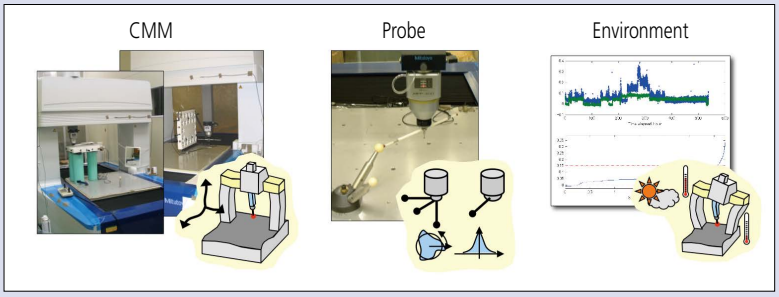

Quantification of CMM uncertainty elements by experiment

* Virtual CMM is a software package originally developed by PTB (Physikalisch-Technische Bundesanstalt).

Relevant parts of ISO 15530: Geometrical Product Specifications (GPS) – Coordinate measuring machines (CMM): Technique for determining the uncertainty of measurement –
Part 3: Use of calibrated workpieces or measurement standards
Part 4: Evaluating task-specific measurement uncertainty using simulation [Technical Specification]

N

Corporate Overview





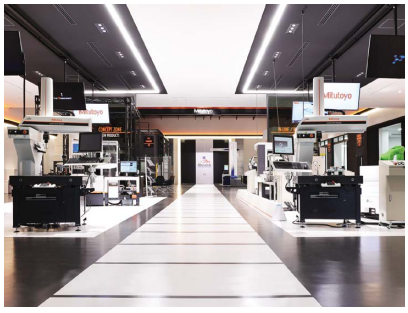



U

Mitutoyo Network

INDEX

Mitutoyo Network

Domestic Network	U-3
Overseas Network	U-5
M^3 Solution Center	U-7
Measuring instrument accompanied with an inspection certificate	U-9
Download service at Mitutoyo website	U-11

Domestic Network

Providing the highest quality services is our mission. In order to support a broad range of customer needs, Mitutoyo is strengthening its network to enable support to be provided even more quickly and effectively. We are expanding our circle of trust with customers through our integrated service system, which ranges from consultations and proposals to after-sales support.


Sendai Sales Office


Utsunomiya Sales Office


Suwa Sales Office


Osaka Sales Office


Fukuoka Sales Office


Kawasaki Plant


Small Tool Plant/Microcord Plant


Kiyohara Plant





Headquarters



Nakatsugawa Plant



Kure Plant



Gohara Plant



Shiwa Plant



Miyazaki Plant



Kochi Plant

Headquarters
TEL: (044) 813-8201 FAX: (044) 813-8210

Sales

Sendai Sales Office
TEL: (022) 231-6881 FAX: (022) 231-6884

Koriyama Sales Office
TEL: (024) 931-4331 FAX: (022) 231-6884

Utsunomiya Sales Office
TEL: (028) 660-6240 FAX: (028) 660-6248

Mito Sales Office
TEL: (029) 303-5371 FAX: (029) 303-5372

Niigata Sales Office
TEL: (025) 281-4360 FAX: (025) 281-4367

Isesaki Sales Office
TEL: (0270) 21-5471 FAX: (0270) 21-5613

Saitama Sales Office
TEL: (048) 667-1431 FAX: (048) 667-1434

Kawasaki Sales Office
TEL: (044) 813-1611 FAX: (044) 813-1610

Tokyo Sales Office
TEL: (03) 3452-0481 FAX: (044) 813-1610

Atsugi Sales Office
TEL: (046) 259-6400 FAX: (046) 259-6404
Fuji Resident Office TEL: (0545) 55-1677

Suwa Sales Office
TEL: (0266) 53-6414 FAX: (0266) 58-1830
Ueda Resident Office TEL: (0268) 26-4531

Hamamatsu Sales Office
TEL: (053) 464-1451 FAX: (053) 464-1683

Anjo Sales Office
TEL: (0566) 98-7070 FAX: (0566) 98-6761

Automotive Sales Office
TEL: (0566) 98-7070 FAX: (0566) 98-6761

Nagoya Sales Office
TEL: (052) 741-0382 FAX: (052) 733-0921

Kanazawa Sales Office
TEL: (076) 222-1160 FAX: (076) 222-1161

Osaka Sales Office
TEL: (06) 6613-8801 FAX: (06) 6613-8817

Kobe Sales Office
TEL: (078) 924-4560 FAX: (078) 924-4562

Keiji Sales Office
TEL: (077) 569-4171 FAX: (077) 569-4172

Okayama Sales Office
TEL: (086) 242-5625 FAX: (086) 242-5653

Hiroshima Sales Office
TEL: (082) 427-1161 FAX: (082) 427-1163

Fukuoka Sales Office
TEL: (092) 411-2911 FAX: (092) 473-1470

Sensing Sales Section
TEL: (044) 813-8236 FAX: (044) 822-8140

Calibration Centers

Utsunomiya Calibration Center
TEL: (028) 656-1432 FAX: (028) 656-8443

Kawasaki Calibration Center
TEL: (044) 813-8214 FAX: (044) 813-8223

Hiroshima Calibration Center
TEL: (0823) 70-3820 FAX: (0823) 70-3833

M³ Solution Centers

UTSUNOMIYA
TEL: (028) 656-1607 FAX: (028) 656-9624

TOKYO
TEL: (044) 813-1611 FAX: (044) 813-1610

SUWA
TEL: (0266) 53-6414 FAX: (0266) 58-1830

ANJO
TEL: (0566) 98-7070 FAX: (0566) 98-6761

OSAKA
TEL: (06) 6613-8801 FAX: (06) 6613-8817

HIROSHIMA
TEL: (082) 427-1161 FAX: (082) 427-1163

Mitutoyo Institute of Metrology

Kawasaki
TEL: (044) 822-4124 FAX: (044) 822-4000

Research and Development

Kawasaki Research and Development Center
TEL: (044) 822-4137 FAX: (044) 822-4127

Manufacturing

Kawasaki Plant
TEL: (044) 822-4132 FAX: (044) 844-9835

Small Tool Plant
TEL: (028) 656-1111 FAX: (028) 656-2164

Microcord Plant
TEL: (028) 656-1111 FAX: (028) 656-4720

Kiyohara Plant
TEL: (028) 667-4811 FAX: (028) 667-4810

Nakatsugawa Plant
TEL: (0573) 68-8201 FAX: (0573) 68-8210

Kure Plant
TEL: (0823) 71-6111 FAX: (0823) 74-4104

Shiwa Plant
TEL: (082) 433-2077 FAX: (082) 433-2695

Gohara Plant
TEL: (0823) 77-1721 FAX: (0823) 77-1724

Miyazaki Plant
TEL: (0985) 86-2591 FAX: (0985) 86-0827

Kochi Plant
TEL: (0889) 57-2036 FAX: (0889) 57-2178

Mitutoyo

Overseas Network

Following the establishment of MTI Corporation (U.S.) in 1963, Mitutoyo has been expanding its market throughout the world. Currently, the company has R&D, manufacturing, sales, and engineering service bases in 31 countries/regions, as well as network of distributors in more than 60 countries. Mitutoyo maintains its rock-solid status as a leading global manufacturer providing services tailored to each regional society.


Mitutoyo Research Center Europe B.V.


Mitutoyo Europe GmbH


Mitutoyo (UK) Ltd.


Mitutoyo France


Mitutoyo Italiana S.r.l


Mitutoyo Nederland B.V.


Mitutoyo Belgium N.V.


Mitutoyo (Schweiz) AG


Mitutoyo Scandinavia AB


Mitutoyo Česko, s.r.o.


Mitutoyo Polska Sp.z o.o.


Mitutoyo Hungária Kft.


Mitutoyo Asia Pacific Pte. Ltd.
Regional Headquarters


Mitutoyo (Malaysia) Sdn. Bhd.


PT. Mitutoyo Indonesia


Mitutoyo (Thailand) Co., Ltd.


Mitutoyo Vietnam Co., Ltd.


Mitutoyo South Asia Pvt. Ltd.

Headquarters

20-1, Sakado 1-chome, Takatsu-ku, Kawasaki-shi
213-8533
TEL: 81(044)813-8201 FAX: 81(044)813-8210

Europe

Mitutoyo Europe GmbH
Borsigstrasse 8-10, 41469 Neuss, GERMANY
TEL: 49 (0)2137 102-0 FAX: 49 (0)2137 102-351
Mitutoyo CTL Germany GmbH
Von-Gunzert-Strasse 17, 78727 Oberndorf, GERMANY
TEL: 49 (0)7423 8776-0 FAX: 49 (0)7423 8776-99
KOMEG Industrielle Messtechnik GmbH
Zum Wasserwerk 3 66333 Völklingen GERMANY
TEL: 49 (0)6898 91110 FAX: 49 (0)6898 9111100

Germany

Mitutoyo Deutschland GmbH
Borsigstrasse 8-10, 41469 Neuss, GERMANY
TEL: 49 (0)2137 102-0 FAX: 49 (0)2137 86 85
M³ Solution Center Hamburg
Tempowerkring 9·im HIT-Technologiepark 21079
Hamburg, GERMANY
TEL: 49 (0)40 791894-0 FAX: 49 (0)40 791894-50
M³ Solution Center Berlin
Ernst-Lau-Straße 6, 12489 Berlin, GERMANY
TEL: 49 (0)30 2611 267 FAX: 49 30 67988729
M³ Solution Center Eisenach
Neue Wiese 4, 99817 Eisenach, GERMANY
TEL: 49 (0)3691 88909-0 FAX: 49 (0)3691 88909-9
M³ Solution Center Ingolstadt
Marie-Curie-Strasse 1A, 85055 Ingolstadt, GERMANY
TEL: 49 (0)841 954920 FAX: 49 (0)841 9549250
M³ Solution Center Leonberg
Am Längenbühl 3, 71229 Leonberg, GERMANY
TEL: 49 (0)7152 6080-0 FAX: 49 (0)7152 608060
Mitutoyo-Messgeräte Leonberg GmbH
Heidenheimer Strasse 14 71229 Leonberg GERMANY
TEL: 49 (0)7152 9237-0 FAX: 49 (0)7152 9237-29

U.K.

Mitutoyo (UK) Ltd. HQ
Joule Road, West Point Business Park, Andover,
Hampshire SP10 3UX, UNITED KINGDOM
TEL: 44 (0)1264 353123 FAX: 44 (0)1264 354883
Coventry M³ Solution Centre
Unit 6, Banner Park, Wickmans Drive, Coventry,
West Midlands CV4 9XA, UNITED KINGDOM
TEL: 44 (0)2476 426300
Halifax M³ Solution Centre
Lowfields Business Park, Navigation Close, Elland,
West Yorkshire HX5 9HB, UNITED KINGDOM
TEL: 44 (0)1422 375566
East Kilbride M³ Solution Centre
The Bairds Building, Rankine Avenue, Scottish Enterprise
Technology Park, East Kilbride G75 0QF,
UNITED KINGDOM
TEL: 44 (0)1355 581170

France

Mitutoyo France
Paris Nord 2 - 123 rue de la Belle Etoile, BP 59267 ROISSY
EN FRANCE 95957 ROISSY CDG CEDEX, FRANCE
TEL: 33 (0)149 38 35 00
M³ Solution Center LYON
"Parc Mail" 523, cours du 3ème millénaire, 69791
Saint-Priest, FRANCE
TEL: 33 (0)149 38 35 70
M³ Solution Center STRASBOURG
Parc de la porte Sud, Rue du pont du péage, 67118
Geispolsheim, FRANCE
TEL: 33 (0)149 38 35 80
M³ Solution Center CLUSES
Espace Scionzier 480 Avenue des Lacs, 74950 Scionzier, FRANCE
TEL: 33 (0)1 49 38 35 90
M³ Solution Center TOULOUSE
Aeroparc Saint-Martin, Cellule B08-ZAC de Saint Martin du
Touch, 12 rue de Caulet, 31300 Toulouse, FRANCE
TEL: 33 (0)1 49 38 42 90
M³ Solution Center RENNES
2, rue Claude Chappe, PA le Vallon - ZAC Mivoie, 35230
Noyal-Châtillon-sur-Seiche, FRANCE
TEL: 33 (0)1 49 38 42 10

Italy

Mitutoyo Italiana S.r.l.
Corso Europa, 7 - 20045 Lainate (MI), ITALY
TEL: 39 02 935781 FAX: 39 02 93578255
M³ Solution Center BOLOGNA
Via dei Carpini 1/A - 40011 Anzola Emilia (BO), ITALY
TEL: 39 02 93578215 FAX: 39 02 93578255
M³ Solution Center CHIETI
Contrada Santa Calcagna - 66020 Rocca S. Giovanni (CH), ITALY
TEL: 39 02 93578280 FAX: 39 02 93578255
M³ Solution Center PADOVA
Via G. Galilei 21/F - 35035 Mestrino (PD), ITALY
TEL: 39 02 93578268 FAX: 39 02 93578255

Netherlands

Mitutoyo Nederland B.V.
Koningsschot 41, 3905 PR Veenendaal, THE NETHERLANDS
TEL: 31(0)318-534911
Mitutoyo Nederland B.V. / M³ Solution Center Enschede
Institutenweg 50, 7521 PK Enschede, THE NETHERLANDS
TEL: 31(0)318-534911
Mitutoyo Nederland B.V. / M³ Solution Center Eindhoven
De Run 1115, 5503 LB Veldhoven, THE NETHERLANDS
TEL: 31(0)318-534911
Mitutoyo Research Center Europe B.V.
De Rijn 18, 5684 PJ Best, THE NETHERLANDS
TEL: 31(0)499-320200 FAX: 31(0)499-320299

Belgium

Mitutoyo Belgium N.V. / M³ Solution Center Melsele
Schaarbeekstraat 20, B-9120 Melsele, BELGIUM
TEL: 32 (0)3-2540444

Austria

Mitutoyo Austria GmbH
Salzburger Straße 260 / 3 A-4600 Wels, AUSTRIA
TEL: 43 (0)7242 219 998
Mitutoyo Austria GmbH Goetzis Regional showroom
Lastenstrasse 48a, 6840 Götzis, AUSTRIA

Switzerland

Mitutoyo (Schweiz) AG
Steinackerstrasse 35, 8902 Urdorf, SWITZERLAND
TEL: 41 (0)447361150
Mitutoyo (Suisse) SA
Rue Galilée 4, 1400 Yverdon-les Bains, SWITZERLAND
TEL: 41 (0)244259422 FAX: 41 (0)447361151

Poland

Mitutoyo Polska Sp.z o.o.
Ul. Graniczna 8A, 54-610 Wroclaw, POLAND
TEL: 48 (0)71354 83 50 FAX: 48 (0)71354 83 55

Czech Republic

Mitutoyo Česko s.r.o.
Dubská 1626, 415 01 Teplice, CZECH REPUBLIC
TEL: 420 417-514-011 Email: info@mitutoyo.cz
Mitutoyo Česko s.r.o. M³ Solution Center Ivančice
Ke Karlovu 62/10, 664 91 Ivančice, CZECH REPUBLIC
TEL: 420 417-514-011 Email: info@mitutoyo.cz
Mitutoyo Česko s.r.o. M³ Solution Center Ostrava Mošnov
Mošnov 314, 742 51 Mošnov, CZECH REPUBLIC
TEL: 420 417-514-050 Email: info@mitutoyo.cz
Mitutoyo Česko s.r.o. Slovakia Branch
Hviezdoslavova 124, 017 01 Považská Bystrica, SLOVAKIA
TEL: 421 948-595-590 Email: info@mitutoyo.sk

Hungary

Mitutoyo Hungária Kft.
Galamb József utca 9, 2000 Szentendre, HUNGARY
TEL: 36 (30) 6410210

Romania

Mitutoyo Romania SRL
1A Drumul Garii Odai Street, showroom, Ground Floor,
075100 OTOPENI-ILFOV, ROMANIA
TEL: 40 (0)311012088 FAX: 40 (0)311012089
Showroom in Brasov
Strada Ionescu Crum Nr.1, Brasov Business Park Turnul 1,
Mezanin, 500446 Brasov-Judetul Brasov, ROMANIA
TEL/FAX: 40 (0)371020017

Russian Federation

Mitutoyo RUS LLC
Sharikopodshipnikovskaya St., 13, bld.5, Moscow, 115088,
RUSSIAN FEDERATION
TEL: 7 495 545 43 90

Finland

Mitutoyo Scandinavia AB Finnish Branch
Viherkiitäjä 2A, 33960, Pirkkala, FINLAND
TEL: 358 (0)40 355 8498

Sweden

Mitutoyo Scandinavia AB
Släntvägen 6, 194 27 Upplands Väsby, SWEDEN
TEL: 46 (0)8 594 109 50 FAX: 46 (0)8 590 924 10
Mitutoyo Scandinavia AB / M³ Solution Center Alingsås
Ängsvaktaregatan 3A, 441 38 Alingsås, SWEDEN
TEL: 46 (0)8 594 109 50 FAX: 46 (0)322 63 31 62
Mitutoyo Scandinavia AB / M³ Solution Center Värnamo
Kalkstensvägen 7, 331 44 Värnamo, SWEDEN
TEL: 46 (0)8 594 109 50 FAX: 46 (0)370 463 34

Singapore

Mitutoyo Asia Pacific Pte. Ltd.
Head Office / M³ Solution Center
24 Kallang Avenue, Mitutoyo Building, SINGAPORE 339415
TEL: (65) 6294 2211 FAX: (65) 6299 6666

Malaysia

Mitutoyo (Malaysia) Sdn. Bhd.
Kuala Lumpur Head Office / M³ Solution Center
Mah Sing Integrated Industrial Park, 4, Jalan Utarid U5/14,
Section U5, 40150 Shah Alam, Selangor, MALAYSIA
TEL: (60)3-7845 9318 FAX: (60)3-7845 9346
Penang Branch office / M³ Solution Center
30, Persiaran Mahsuri 1/2, Sunway Tunas, 11900 Bayan
Lepas, Penang, MALAYSIA
TEL: (60)4-641 1998 FAX: (60)4-641 2998
Johor Branch office / M³ Solution Center
70 (Ground Floor), Jalan Molek 1/28, Taman Molek, 81100
Johor Bahru, Johor, MALAYSIA
TEL: (60)7-352 1626 FAX: (60)7-352 1628

Thailand

Mitutoyo (Thailand) Co., Ltd.
Bangkok Head Office / M³ Solution Center
76/3-5, Chaengwattana Road, Kwaeng Anusaowaree,
Khet Bangkaen, Bangkok 10220, THAILAND
TEL: (66)2080 3500 FAX: (66)2521 6136
Chonburi Branch / M³ Solution Center
7/1, Moo 3, Tambon Bowin, Amphur Sriracha, Chonburi
20230, THAILAND
TEL: (66)2080 3563 FAX: (66)3834 5788
ACC Branch / M³ Solution Center
122/8, 122/9, Moo 6, Tambon Donhuaroh,
Amphur Muangchonburi, Chonburi 20000, THAILAND
TEL: (66)2080 3565

Indonesia

PT. Mitutoyo Indonesia
Head Office / M³ Solution Center
Jalan Sriwijaya No. 26 Desa cibatu Kec. Cikarang Selatan
Kab., Bekasi 17530, INDONESIA
TEL: (62)21-2962 8600 FAX: (62)21-2962 8604

Vietnam

Mitutoyo Vietnam Co., Ltd.
Hanoi Head Office / M³ Solution Center
1st & 2nd floor, MHDI Building, No. 60 Hoang Quoc Viet Road,
Nghia Do Ward, Cau Giay District, Hanoi, VIETNAM
TEL: (84)24-3768 8963 FAX: (84)24-3768 8960
Ho Chi Minh City Branch Office / M³ Solution Center
Unit No. B-00.07, Ground Floor, C1 Building, No. 6, Street D9,
An Loi Dong Ward, Thu Duc City, Ho Chi Minh City, VIETNAM
TEL: (84)28-3840-3489
Hai Phong City Branch Office
Room 511, 5th Floor, Thanh Dat 3 Building, No. 4 Le Thanh
Tong Street, May To Ward, Ngo Quyen District, Hai Phong City,
VIETNAM
TEL: (84)22-5398-9909

Philippines

Mitutoyo Philippines, Inc.
Head Office / M³ Solution Center
Unit 1B & 2B LTI, Administration Building 1, Annex 1, North Main
Avenue, Laguna Technopark, Binan Laguna 4024, PHILIPPINES
TEL/FAX: (63) 49 544 0272




Mitutoyo America Corporation
Head Office


Mitutoyo Sul Americana Ltda.
Argentina Branch


Mitutoyo Canada Inc.


Mitutoyo Mexicana S.A. de C.V


Mitutoyo Measuring Instruments
(Shanghai) Co., Ltd.


Tianjin Office


Mitutoyo Measuring Instruments
(Suzhou) Co., Ltd.


Mituotyo Taiwan Co., Ltd.



Mitutoyo Korea Corporation


Mitutoyo Sul Americana Ltda.

India

Mitutoyo South Asia Pvt. Ltd.
Head Office
C-122, Okhla Industrial Area, Phase-I, New Delhi-110 020, INDIA
TEL: (91) 11-40578485/86
MSA Technical Center
Plot no. 65, Ground Floor, Udyog Vihar, Phase-4 Gurgaon, Haryana - 122016, INDIA
TEL: (91) 124–2340286/287
Mumbai Region Head office
303, Sentinel Hiranandani Business Park Powai, Mumbai-400 076, INDIA
TEL: (91) 22-25700684/685/837/839
Pune Office / M³ Solution Center
G4/G5, Pride Kumar Senate, Off. Senapati Bapat Road, Pune-411 016, INDIA
TEL: (91) 20-25660043/44/45
Ahmedabad Office / M³ Solution Center
A-104 & A-105, First Floor, Solitaire Corporate Park, Near Divya Bhaskar, Press, S.G. Road, Ahmedabad - 380 015, INDIA
TEL: (91) 079-29704902/903
Bengaluru Region Head office / M³ Solution Center
116/117-2, Ground Floor, Sy. No. 93 & 94, 3rd Phase, Peenya Industrial Area, Bengaluru-560 058, INDIA
TEL: (91) 80-25630946/47/48/49
Coimbatore Office
Regus, Srivari Srimath, 3rd Floor, Door No:1045, Avinashi Road, Coimbatore - 641 018, INDIA
TEL: (91) 9345005663
Chennai Office / M³ Solution Center
No. 624, Anna Salai Teynampet, Chennai-600 018, INDIA
TEL: (91) 44-24328823/24/25
Kolkata Office
Unit No. 1208, Om Tower, 32, J.L.Nehru Road, Kolkata-700 071, INDIA
TEL: (91) 33-22267088/40060635/22266817

Taiwan

Mitutoyo Taiwan Co., Ltd. / M³ Solution Center Taipei
4F., No. 71, Zhouzi St., Neihu Dist., Taipei City 114, TAIWAN
TEL: 886(2)5573-5900 FAX: 886(2)8752-3267
Taichung Branch / M³ Solution Center Taichung
1F., No. 299, Gaotie 1st Rd., Wuri Dist., Taichung City 414, TAIWAN
TEL: 886(4)2338-6822 FAX: 886(4)2338-6722
Kaohsiung Branch / M³ Solution Center Kaohsiung
1F., No. 31-1, Haibian Rd., Lingya Dist., Kaohsiung City 802, TAIWAN
TEL: 886(7)334-6168 FAX: 886(7)334-6160

South Korea

Mitutoyo Korea Corporation
Head Office / M³ Solution Center
(Sanbon-Dong, Geumjeong High View Build.), 6F, 153-8, Ls-Ro, Gunpo-Si, Gyeonggi-Do, 15808 KOREA
TEL: 82(31)361-4200 FAX: 82(31)361-4201
Busan Office / M³ Solution Center
(3150-3, Daejeo 2-dong) 8, Yutongdanji 1-ro 49beon-gil, Gangseo-gu, Busan, 46721 KOREA
TEL: 82(51)324-0103 FAX: 82(51)324-0104
Daegu Office / M³ Solution Center
(Galsan-dong, Daegu Business Center), 301-Ho, 217, Seongseogongdan-ro, Dalseo-gu, Daegu 42704 KOREA
TEL: 82(53)593-5602 FAX: 82(53)593-5603

China

Mitutoyo Measuring Instruments (Shanghai) Co., Ltd.
8th Floor, Tower 1 Lujiazui Jinkong Square No. 1788/1800 Century Ave., Pudong New District, Shanghai 200122, CHINA
TEL: 86(21)5836-0718 FAX: 86(21)5836-0717
Suzhou Office / M³ Solution Center China (Suzhou)
No. 46 Baiyu Road, Suzhou 215021, CHINA
TEL: 86(512)6522-1790 FAX: 86(512)6251-3420
Wuhan Office / M³ Solution Corner
Room1701, Wuhan Wanda Center, No. 96, Linjiang Road, Wuchang District, Wuhan, Hubei 430060, CHINA
TEL: 86(27) 8544 8631 FAX: 86(27) 8544 6227
Chengdu Office
1-701, New Angle Plaza, 668# Jindong Road, Jinjiang District, Chengdu, Sichuan 610066, CHINA
TEL: 86(28)8671-8936 FAX: 86(28)8671-9086
Hangzhou Office
Room 804, Eastern International Business Center Building 1, No. 600 Jinsha Road of Hangzhou Economic and Technological Development Zone, 310018, CHINA
TEL: 86(571)8288-0319 FAX: 86(571)8288-0320
Tianjin Office / M³ Solution Center China (Tianjin)
RoomD 12/F, TEDA Building, No. 256 Jie-fang Nan Road Hexi District, Tianjin 300042, CHINA
TEL: 86(22)5888-1700 FAX: 86(22)5888-1701
Changchun Office
Room815, 8F, Building A1, Upper East International No. 3000 Dongsheng Street, Erdao District, Changchun, Jilin, 130031, CHINA
TEL/FAX: 86(431)8192-6998
Chongqing Office
Room.1312, Building 3, Zhongyu Plaza, No. 86, Hongjin Avenue, Longxi Street, Yubei District, Chongqing, 400000, CHINA
TEL/FAX: 86(23)6595-9950
Qingdao Office
Room 638, 6F, No. 192 Zhengyang Road, Chengyang District, Qingdao, Shandong, 266109, CHINA
TEL: 86(532)8096-1936 FAX: 86(532)8096-1937
Xi'an Office
Room805, Xi'an International Trade Center, No. 196 Xiaozhai East Road, Xi'an, 710061, CHINA
TEL: 86(29)85381380 FAX: 86(29)85381381
Dalian Office / M³ Solution Center China (Dalian)
Room A-106 Shuijing SOHO, No. 16 Harbin Road, Economic Development Zone, Dalian, 116600 CHINA
TEL: 86(411)8718-1212 FAX: 86(411)8754-7587
Zhengzhou Office
Room1801, 18/F, Unit1, Building No. 23, Shangwu Inner Ring Road, Zhengdong New District, Zhengzhou City, Henan 450018, CHINA
TEL: 86(371)6097-6436 FAX: 86(371)6097-6981
Dongguan Office / M³ Solution Center China (Dongguan)
Room 801, No 65, Chang'an Section Guanchang Road, Chang'an Town, Dongguan City, Guangdong 523841, CHINA
TEL: 86(769)8541 7715 FAX: 86(769)-8541 7745
Fuzhou Office
Unit 03, 7th floor of East Tower, Sansheng International Center, No.118 Wusi Road, Gulou Distrit, Fuzhou City, Fujian 350001, CHINA
TEL: 86(591) 8761 8095 FAX: 86(591) 8761 8096
Changsha Office
Room 2207, Building 1, Shiner International Plaza, No. 88, Kaiyuan Middle Road, Changsha City, Hunan 410100, CHINA
TEL: 86 (731) 8401 9276 FAX: 86 (731) 8401 9376
Changzhou Office
Room 1502, Joint Financial Tower, No. 255, Tongjiang North Road, Tianning District, Changzhou City, Jiangsu 2130002, CHINA
TEL: 86(519)8815 8319 FAX: 86(519)8815 8319
Wenzhou Office
Room 512, Building 4, Xinjingdujiayuan, Sanyang Street, Ouhai District, Wenzhou City, Zhejiang 325014, CHINA
Shunde Office
Room 1603, Buliding 26, Vanke Golden Riverside Plaza Phase II, No.13 Mid DeSheng Road, ShunDe District, Foshan City, Guangdong 528300, CHINA
TEL/FAX: 86(757)2228 8621
Mitutoyo Measuring Instruments (Suzhou) Co., Ltd.
No. 46 Baiyu Road, Suzhou, 215021, CHINA
TEL: 86(512)6252-2660 FAX: 86(512)6252-2580

U.S.A.

Mitutoyo America Corporation
965 Corporate Blvd., Aurora, IL 60502, U.S.A.
TEL: 1-(630)820-9666 Toll Free No. 1-888-648-8869
FAX: 1-(630)978-3501
Headquarters (Aurora) / M³ Solution Center
965 Corporate Blvd., Aurora, IL 60502, U.S.A.
Seattle (Renton) Office / M³ Solution Center
1000 SW 34th St. Suite G, Renton, WA 98057, U.S.A.
TEL: 1-(888)-648-8869
Houston Office / M³ Solution Center
4560 Kendrick Plaza Drive Suite 120 Houston, TX 77032, U.S.A.
TEL: 1-(888)-648-8869 FAX: 1-(281) 227-0937
Cincinnati (Mason) Office / M³ Solution Center
6220 Hi-Tek Ct., Mason, OH 45040, U.S.A.
TEL: 1-(888)-648-8869 FAX: 1-(513)754-0718
Detroit (Novi) Office / M³ Solution Center
46850 Magellan Drive, Suite 100 Novi, MI 48377, U.S.A.
TEL: 1-(888)-648-8869 FAX: 1-(248)-926-0928
Los Angeles (City of Industry) Office / M³ Solution Center
16925 E. Gale Ave., City of Industry, CA 91745, U.S.A.
TEL: 1-(888)-648-8869 FAX: 1-(626)369-3352
Charlotte (Huntersville) Office / M³ Solution Center
11515 Vanstory Dr., Suite 140, Huntersville, NC 28078, U.S.A.
TEL: 1-(888)-648-8869 FAX: 1-(704)875-9273
Boston (Marlborough) Office / M³ Solution Center
753 Forest Street, Suite 110, Marlborough, MA 01752, U.S.A.
TEL: 1-(888)648-8869 FAX: 1-(508)485-0782
Mitutoyo America Corporation Calibration Lab
965 Corporate Blvd., Aurora, IL 60502, U.S.A.
TEL: 1-(888)-648-8869 FAX: 1-(630) 978-6477
Mitutoyo America Corporation CT-Lab Chicago
965 Corporate Blvd., Aurora, IL 60502, U.S.A.
TEL: 1-(888)-648-8869 FAX: 1-(630)-820-3418
Mitutoyo Research & Development America, Inc.
11533 NE 118th St., Kirkland, WA 98034-7111, U.S.A.
TEL: 1-(425)821-3906 FAX: 1-(425)821-3228
Mitutoyo Research & Development America, Inc. - California Office
16925 Gale Ave. City of Industry, CA 91745-1806, U.S.A.
TEL: 1-(425)821-3906 FAX: 1-(425)821-3228

Canada

Mitutoyo Canada Inc.
2121 Meadowvale Blvd., Mississauga, Ont. L5N 5N1., CANADA
TEL: 1-(905)821-1261 FAX: 1-(905)821-4968
Montreal Office
7075 Place Robert-Joncas Suite 129, Montreal, Quebec H4M 2Z2, CANADA
TEL: 1-(514)337-5994 FAX: 1-(514)337-4498

Brazil

Mitutoyo Sul Americana Ltda.
Head office / M³ Solution Center
Rodovia Indio Tibiriçá 1555, CEP 08655-000 - Vila Sol Nascente - Suzano - SP - BRASIL
TEL: 55 (11) 5643-0004/0041
Filial Campinas / M³ Solution Center
Avenida Francisco Alfredo Junior, nº 307, Sala 01 e 02, Bairro Swiss Park – Campinas – São Paulo – BRASIL CEP 13049255
TEL: 55 (19) 3397-3412
Filial Curitiba / M³ Solution Center
Rua Sergipe, nº 101, Sala A, Bairro Boneca do Iguaçu, São José dos Pinhais – Paraná – BRASIL CEP 83040120
TEL: 55 (41) 3534-1728

Argentina

Mitutoyo Sul Americana Ltda.
Argentina Branch / M³ Solution Center
Av. B. Mitre 891/899 - C.P. (B1603CQI) Vicente López – Pcia. Buenos Aires – ARGENTINA
TEL: 54 (11) 4730-1433 FAX: 54 (11) 4730-1411
Sucursal Cordoba / M³ Solution Center
Av. Ricchieri 2872 L.4 – 8° Jardin – CP X5014OPJ Cordoba, ARGENTINA
TEL: 54 (351) 464-4125

Mexico

Mitutoyo Mexicana, S.A. de C.V.
Industria Elèctrica No. 15, Parque Industrial, Naucalpan de Juárez, Estado de Mèxico C.P.53370, MÉXICO
TEL: 52 (01-55) 5312-5612 FAX: 52 (01-55) 5312-3380
Monterrey Office / M³ Solution Center
Blv. Interamericana No. 103, Parque Industrial FINSA, C.P. 66636 Apodaca, N.L., MÉXICO
TEL: 52 (01-81) 8398-8227/8228/8242/8244
FAX: 52 (01-81) 8398-8226
Tijuana Office / M³ Solution Center
Calle José María Velazco 10501-C, Col. Cd. Industrial Nueva Tijuana, C.P. 22500 Tijuana, B.C., MÉXICO
TEL: 52 (01-664) 647-5024
Querétaro Office / M³ Solution Center
Av. Cerro Blanco No. 500-1, Colonia Centro Sur, Querétaro, Querétaro, C.P. 76090, MÉXICO
TEL: 52 (01-442) 340-8018, 340-8019 and 340-8020
FAX: 52 (01-442) 340-8017
Mitutoyo Mexicana, S.A. de C.V. Querétaro Calibration Laboratory
Av. Cerro Blanco 500 30 Centro Sur, Querétaro, Querétaro, C.P. 76090, MÉXICO
TEL: 52 (01-442) 340-8018, 340-8019 and 340-8020
FAX: 52 (01-442) 340-8017
Aguascalientes Office / M³ Solution Center
Av. Aguascalientes No. 622, Local 15 Centro Comercial El Cilindro Fracc. Pulgas Pandas Norte, C.P. 20138, Aguascalientes, Ags. MÉXICO
TEL: 52 (01-449) 174-4140 and 174-4143
Irapuato Office / M³ Solution Center
Boulevard a Villas de Irapuato No. 1460 L.1 Col. Ejido Irapuato C.P. 36643 Irapuato, Gto., MÉXICO
TEL: 52 (01-462)144-1200 and 144-1400

Mitutoyo

M³ Solution Center

Mcube

M³ Solution Center

M³ = Mitutoyo, Measurement, Metrology

Specialists in each field meet each customer's needs in detail

In order to meet the precise needs of customers, Mitutoyo has built a domestic sales network. Along with strengthening the company's ability to rapidly and accurately satisfy customer needs, the company has also built an extensive after-sales network. Mitutoyo has also created its M³ Solution Centers that are specifically designed to address measurement-related challenges from customers. Here, effective solutions to out-ofthe ordinary requirements can be found through demonstrations of the company's products, and latest technology, in combiration with consultations with Mitutoyo's metrology experts.

M³ Solution Center (U.S.A.)



M³ Solution Center Ingolstadt (Germany)



Mitutoyo Canada Inc. (Canada)



M³ Solution Center TOULOUSE (France)



U

Through M³ Solution Centers across the world, we offer optimum measuring solutions to our customers.

In recent years, as the reduction of lead times has become a major theme in manufacturing, in the category of large measuring equipment such as coordinate measuring machines, including car body CMMs and form measuring instruments, demand for CNC machines (computer numerical control automated measuring machines) has been rising. Moreover, along with a similar increase in demand for 3D CAD, non-contact measurement using laser sensor probes has become common for 3D measuring machines. By providing M³ Solution Centers in various locations across the world, Mitutoyo is in a position to propose the use of its technologies in the fields of hardware, software, sensors, automatic control, handling systems, and the various types of tools, combined with thirdparty technologies, to answer customers' issues relating to advanced measurement.

A network spanning Japan, Asia, Europe, and America provides solutions to all kinds of problems on a global basis.

Our mission is to provide optimum solutions tailored to the measurement-related needs of our customers in a speedy and accurate manner. In order to effectively respond to the various requests and tasks given us by customers all around the world, Mitutoyo has set up M³ Solution Centers that promote our measuring technologies to a worldwide audience.
Our collaborative network, which spans Japan, Asia, Europe, and America, allows us to respond to needs on a global basis.

M³ Solution Center Taichung (Taiwan)



M³ Solution Center (Singapore)



MSA Technical Center (India)



M³ Solution Center (South Korea)



U

Measuring instrument accompanied with an inspection certificate

As part of quality assurance, Mitutoyo will attach data at the time of factory shipment*1 to the products listed in page U-10.*2
Also, if calibration of the measuring instrument is requested at the time of purchase, we will issue, at a separate charge, a calibration certificate that proves traceability with the reference gage. If you wish to request calibration, please contact your local Mitutoyo sales office.

*1 For some products whose purchase date cannot be identified, the inspection data at the time of factory shipment cannot be used in the calibration certificate. For details, please contact your local Mitutoyo sales office.
*2 The products are listed in the series name. There are some models that will not be accompanied with an inspection certificate.



- For the details of the inspection items to be included in the inspection certificate, please contact your local Mitutoyo sales office.
- If you have a request on inspection items, contact your local Mitutoyo sales office.





QuantuMike
293-140-30





IP67 ABSOLUTE Coolant Proof Caliper
500-702-20



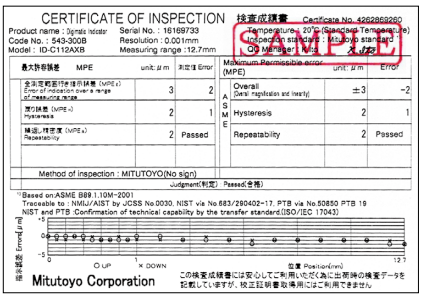

ABSOLUTE Digimatic Indicator ID-C (Peak-Value Hold Type)
543-300-10 / 543-300B-10



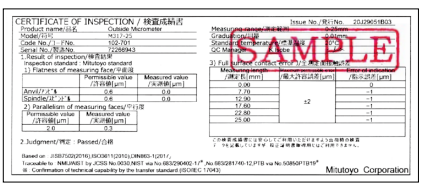

Ratchet Thimble Micrometer
102-701

Products Name		Page
Micrometers (only for models with the range of 0 - 25 mm and 25 - 50 mm)	High-Accuracy Digimatic Micrometer	B-3 to B-4
	QuantuMike	B-5 to B-6
	Coolant Proof Micrometers	B-7 to B-8
	Digimatic Outside Micrometers	B-10
	Outside Micrometers	B-13
	Ratchet Thimble Micrometer	B-14
	Outside Micrometers	B-15 to B-16
Inside Diameter Measuring Tools	Digimatic Holtest	C-3 to C-6
	Holtest	C-7 to C-10
	Holtest (Type II)	C-11 to C-12
	ABSOLUTE Borematic	C-13 to C-16
	Inside Micro Checker	C-28
Calipers	IP67 ABSOLUTE Coolant Proof Caliper	D-3 to D-4
	ABSOLUTE Digimatic Caliper	D-5 to D-6
	Dial Caliper	D-14
Caliper/Height Gage Checker	CERA Caliper Checker	D-56
High Precision Height Measuring Tools	Linear Height	D-59 to D-60
	QM-Height	D-61 to D-62
Depth Gages	Depth Micro Checker	D-68
Gauge Blocks	Gauge Blocks with a Calibrated Coefficient of Thermal Expansion	E-6
	ZERO CERA Blocks	E-6
	Metric/Inch Rectangular Gauge Block Sets	E-7 to E-10
	Micrometer Inspection Gauge Block Sets	E-11 to E-12
	Individual Metric/Inch Rectangular Gauge Blocks	E-13 to E-16
	Metric/Inch Square Gauge Block Sets	E-21 to E-22
	Individual Metric/Inch Square Gauge Blocks	E-23 to E-24
	Step Master	E-27
	Gauge Block Comparator GBCD-100A	E-31
	Gauge Block Comparator GBCD-250	E-32
Reference Gages	Height Master	E-35
	Digital Height Master	E-35
	Riser Blocks	E-36
	Universal Height Master	E-37
	Check Master	E-38
	Standard Scales	E-39
	Working Standard Scales	E-40
	High Precision Square	E-41
	Black Granite Surface Plates	E-47 to E-48

Products Name		Page
Digimatic Indicators	ABSOLUTE Digimatic Indicator ID-SX2	F-3 to F-4
	ABSOLUTE Digimatic Indicator ID-CNX	F-5 to F-7
	ABSOLUTE Digimatic Indicator ID-N/B	F-8 to F-9
	ABSOLUTE Digimatic Indicator ID-C (Peak-Value Hold Type)	F-10 to F-11
	ABSOLUTE Digimatic Indicator ID-C (Bore Gage Type)	F-12 to F-13
	ABSOLUTE Digimatic Indicator ID-C (Calculation Type)	F-14 to F-15
	ABSOLUTE Digimatic Indicator ID-C (Signal Output Function Type)	F-17 to F-18
	ABSOLUTE Digimatic Indicator ID-U	F-19 to F-20
	Digimatic Indicator ID-H	F-21 to F-22
	High-performance ABSOLUTE Digimatic Indicator ID-F	F-23 to F-24
Dial Indicators	Dial Indicators	F-28 to F-56
Dial Test Indicators	Dial Test Indicators	F-67 to F-74
Indicator Tester	i-Checker	F-77
	Calibration Tester (UDT)	F-78
Linear Gages	High-precision LGH (0.01/0.005 µm resolution)	G-9 to G-10
Linear Scales	Linear Scales AT Series	H-8 to H-13
	Linear Scales ST Series	H-16 to H-19
Vision Measuring Systems	Quick Vision	K-3 to K-8
	Micro Form Measuring System UMAP	K-9
	Vision Measuring Machine with Micro-Form Scanning Probe (MiSCAN Vision System)	K-10
	QUICK SCOPE	K-13
	QUICK IMAGE	K-14
Form Measurement	Surftest	L-5 to L-7
	Contracer	L-8
	Formtracer	L-9 to L-14
	Roundtest	L-21 to L-24
	Roundtracer	L-25
Hardness Testing Machines	Micro Vickers Hardness Testing Machines	M-3
	Vickers Hardness Testing Machines	M-4
	Rockwell Hardness Testing Machines	M-5 to M-8
	Rebound Type Portable Hardness Tester (HH-411)	M-9

Note: Some products mentioned above will not be accompanied with an inspection certificate as standard.

Mitutoyo

Download service at Mitutoyo website

Download of the catalog is available from the top page of Mitutoyo website by the following procedures:

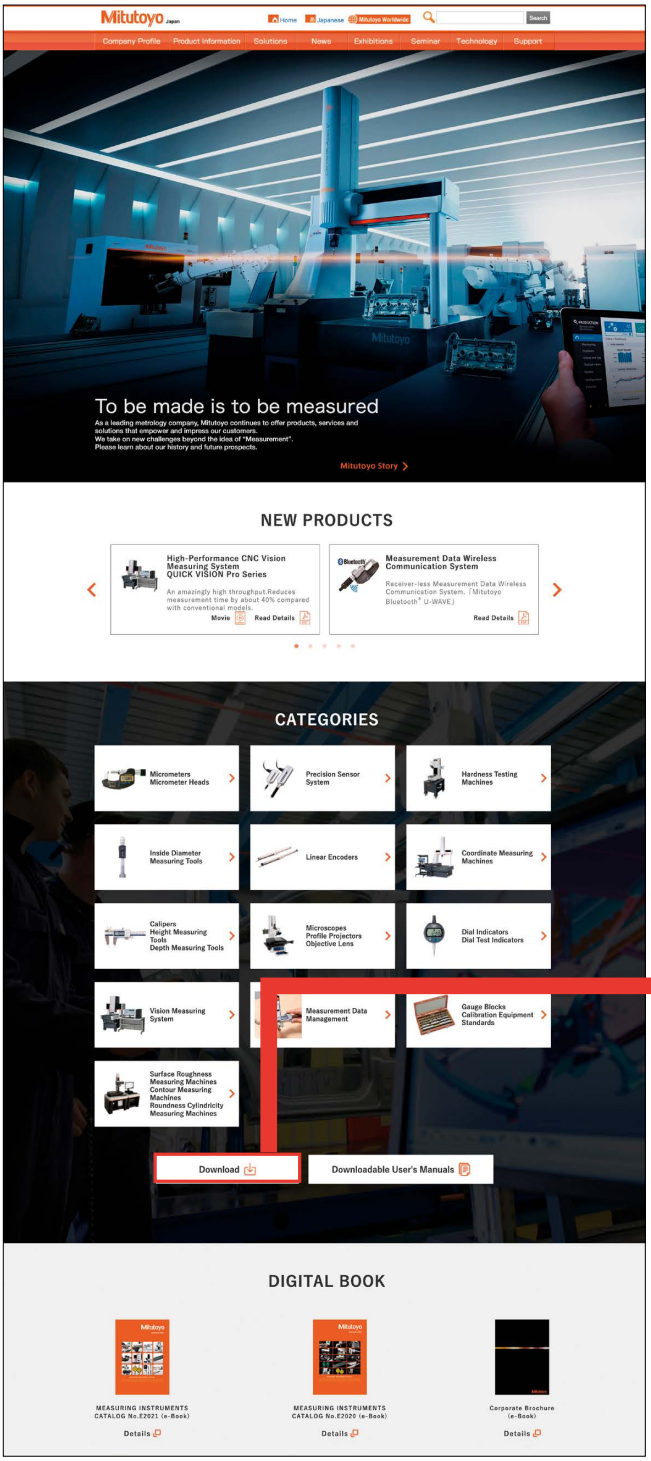

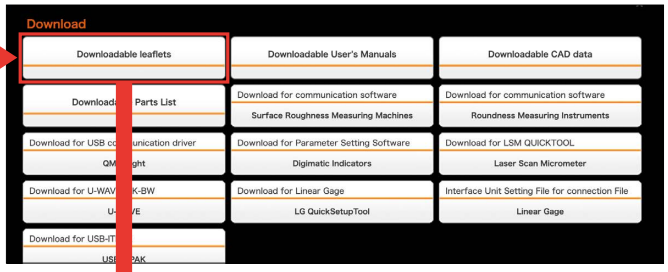

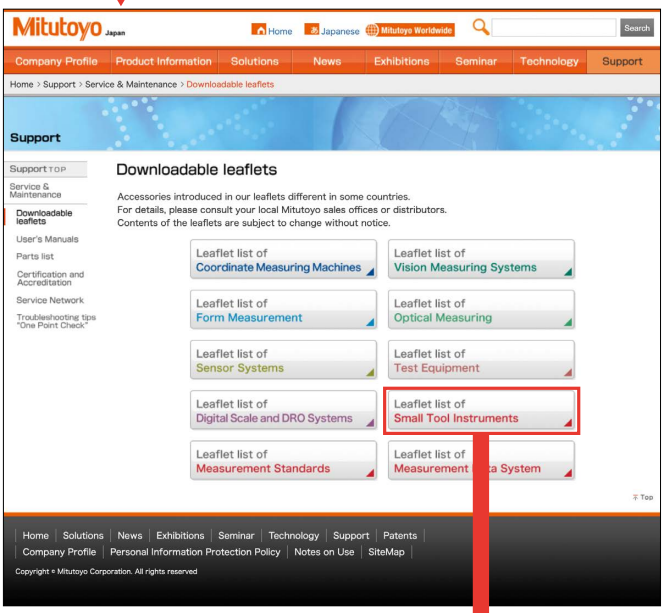

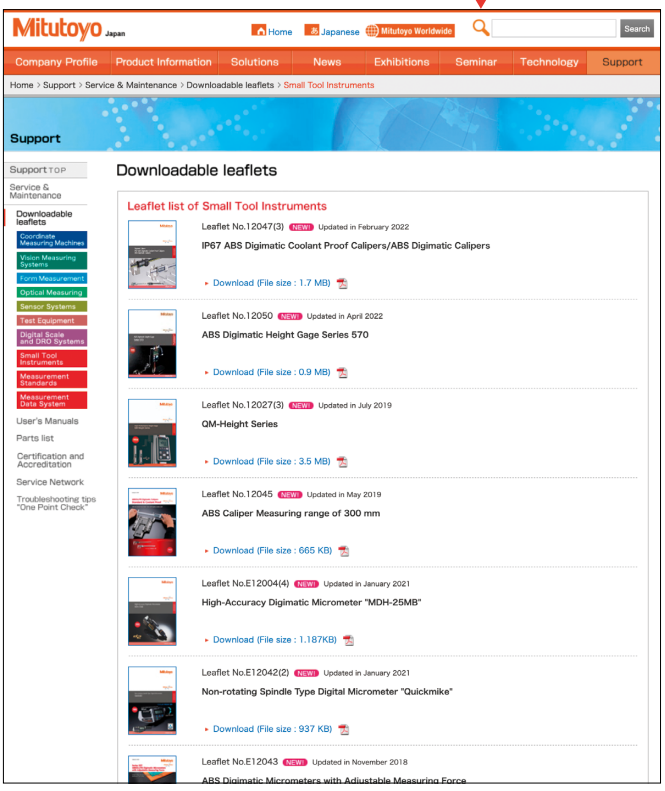

If you are interested in any of our products listed in the General Catalog, please contact your local Mitutoyo sales office referring to page U-5 and U-6, or visit Mitutoyo local corporations website accessing from MITUTOYO Worldwide top page.
Also, the catalog can be downloaded in the PDF data (partially excluded) at our website. (See the above image.)

URL: https://www.mitutoyo.co.jp

English version of General Catalog digital book

Mitutoyo Measuring Instrument General Catalog is available in the form of digital book at out website. You can look through all pages of the catalog on your screen as though turning pages of a book. Please note that it will require approximately two months after the catalog release until the updated version of the digital book is uploaded.

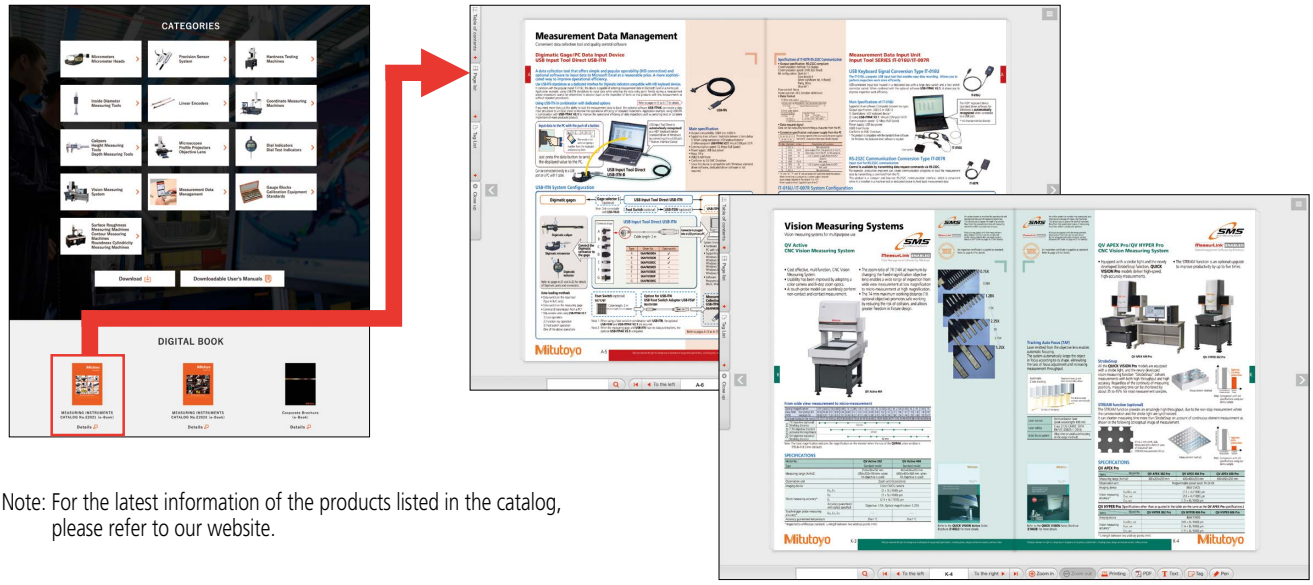

Note: For the latest information of the products listed in the catalog, please refer to our website.

MITUTOYO Worldwide

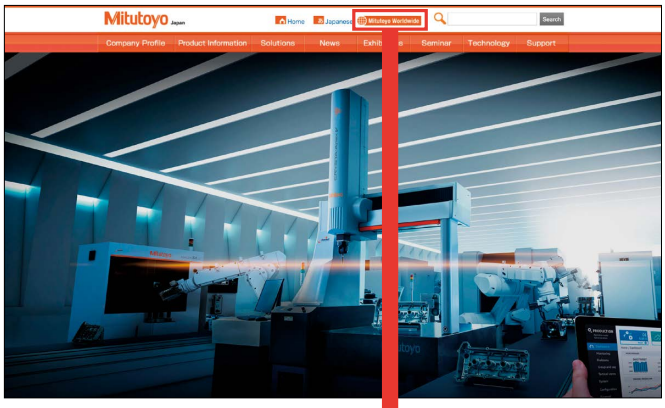

This page will guide you to each Mitutoyo local corporations.

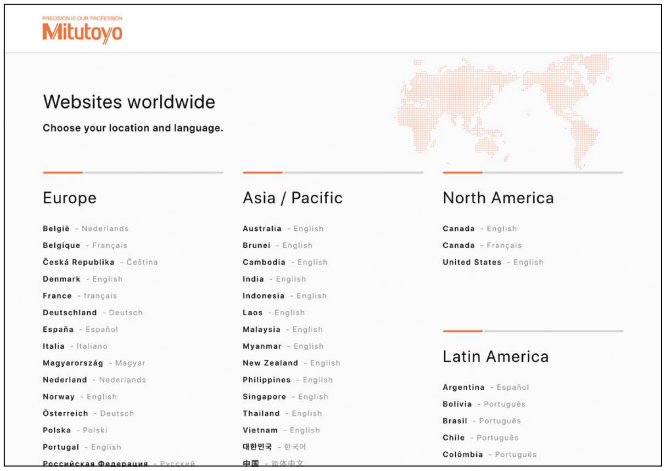

U



In the Spirit of Mitutoyo

To become a complete man, one must acquire Wisdom, Benevolence and Valor. With Wisdom only, one tends to be cold. Benevolence alone makes one weaker. With valor only, one may reach beyond his capabilities. When the three qualities are combined, however, one will become a complete man. Similarly, success in enterprise lies in the knowledge of Heaven, Earth and Man. Business will succeed only when these factors, "heavensent" chances, natural opportunities, and harmony of man are present. Without even one factor, success is remote. In Buddhism, Butsu (Buddha), Po (Doctrine) and So (Priest) are three principle treasures for its promotion of the teaching. In Christianity, God, Bible and Minister.
The word MITUTOYO signifies three abundances. "Mitsu" means three, while "Toyo" stands for a state of abundance. The name MITUTOYO was selected, with a sincere wish to see more complete men, to create a prosperous enterprise and to introduce righteous religion to all, along with the lasting wish for a peaceful world and fulfillment of meaningful life.

SINGAPORE

REGIONAL HEADQUARTERS

Mitutoyo Asia Pacific Pte. Ltd.
Company Reg. No. 197800892N
Tel: (65) 6294 2211 Fax: (65) 6299 6666
E-mail: mapsg@mitutoyo.com.sg

www.mitutoyo.com.sg | www.mitutoyo.com.my
www.mitutoyo.co.th | www.mitutoyo.co.id
www.mitutoyo.com.vn | www.mitutoyo.com.ph

MALAYSIA

Mitutoyo (Malaysia) Sdn. Bhd.
Tel: (60)3-7845 9318
Fax: (60)3-7845 9346
E-mail: mmsb@mitutoyo.com.my

Penang Branch
Tel: (60)4-641 1998
Fax: (60)4-641 2998
E-mail: mmsb@mitutoyo.com.my

Johor Branch
Tel: (60)7-352 1626
Fax: (60)7-352 1628
E-mail: mmsb@mitutoyo.com.my

THAILAND

Mitutoyo (Thailand) Co., Ltd.
Tel: (66)2080 3500
Fax: (66)2521 6136
E-mail: office@mitutoyo.co.th

Chonburi Branch
Tel: (66)2080 3563
Fax: (66)3834 5788
E-mail: office@mitutoyo.co.th

ACC Branch
Tel: (66)2080 3565
E-mail: office@mitutoyo.co.th

INDONESIA

PT. Mitutoyo Indonesia
Tel: (62)21-2962 8600
Fax: (62)21-2962 8604
E-mail: ptmi@mitutoyo.co.id

VIETNAM

Mitutoyo Vietnam Co., Ltd.
Tel: (84)24-3768 8963
Fax: (84)24-3768 8960
E-mail: mvc@mitutoyo.com.vn

Ho Chi Minh City Branch
Tel: (84)28-3840 3489
E-mail: mvc@mitutoyo.com.vn

Hai Phong City Branch
Tel: (84)22-5398 9909
E-mail: mvc@mitutoyo.com.vn

PHILIPPINES

Mitutoyo Philippines, Inc.
Tel: (63)49-544 0272
Fax: (63)49-544 0272
E-mail: mpi@mitutoyo.com.ph

Distributed by:

Follow us on social media

Printed in Japan
674 2210(1)Eh-(DI)KO